SEQ NO	QTY	Item ID	Item Name / Dimension	Standard-ID	Basic Material	Net Weight
1	1	107.390.729.500	FLANGE DIMENSIONS			0.001
2	1	PAAD371236	WELD. AND TEST INSTRUCTIONS			0.001

Prod.				
	10 X92DF-2.0			

Change History

Rev.	Creator	Approver	Approval Date	Change ID	Change Synopsis	Activity Code	E	C
-	zta101	yzh102	10.08.2021	CNAA000449	main drawing introduced		-	-

Approved

WIN GD
Winterthur Gas & Diesel

PIPE CONNECTION PLAN

Bill Of Material

Dimension

Units	[m] [kg]	Basic Material			Net Weight	0.001
Main Design	Yes	Design Group	8020	Q-Code XXXXX	Standard	WDS
Qty per	Engine	A4	Item ID	PTAA008553	BOM Page/s	01/01

Copyright **Winterthur Gas & Diesel Ltd.** All rights reserved. By taking possession of the document the recipient recognizes and honours these rights. Neither the whole nor any part of this document may be used in any way for construction, fabrication, marketing or any other purpose nor copied in any way nor made accessible to third parties without the previous written consent of **Winterthur Gas & Diesel Ltd.**

Download
"DXF file"

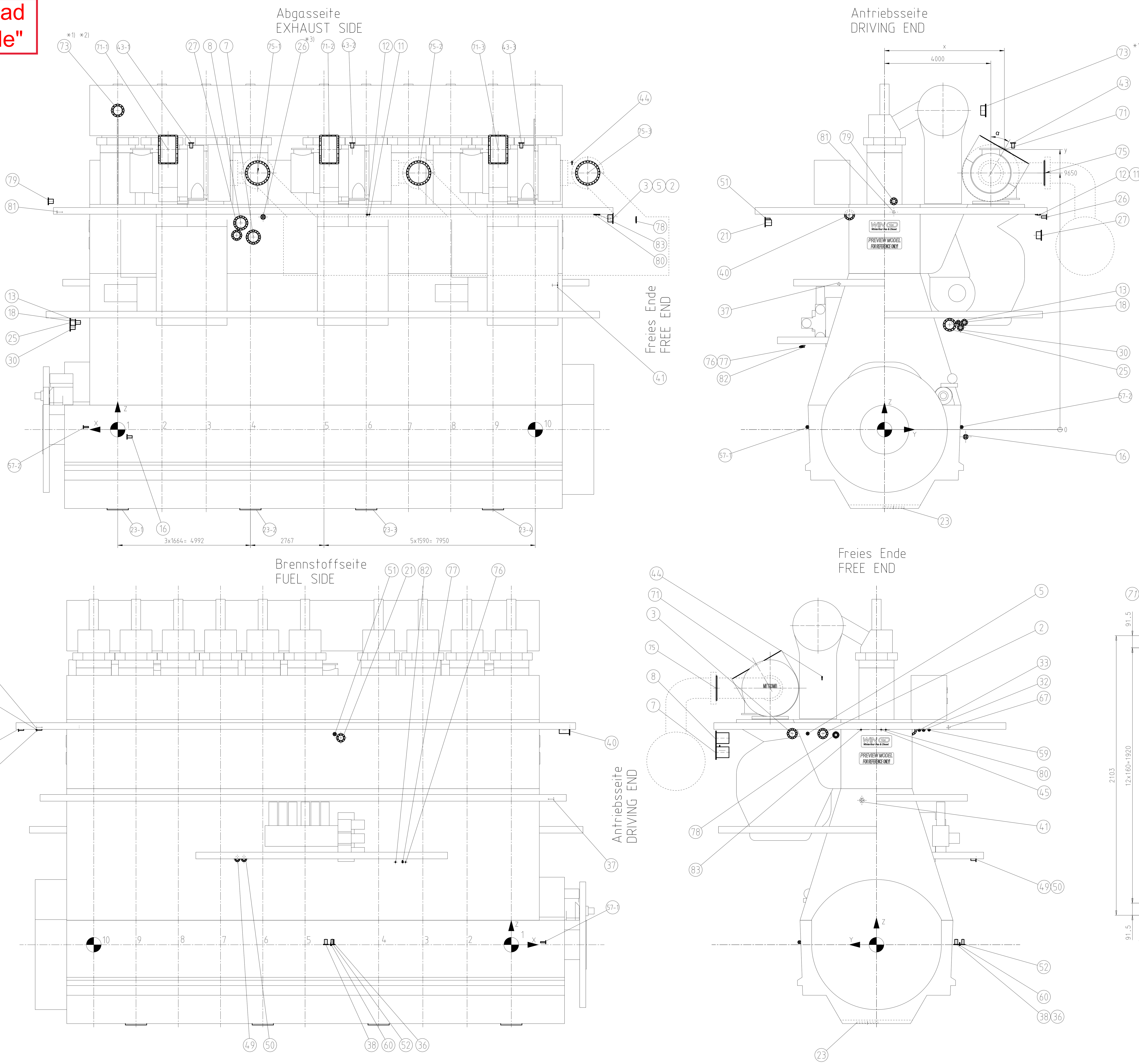

Gasaustritt-Stellung GAS OUTLET POSITION ◁ α	x	y
0°	4000	10670
15°	4264	10635
30°	4510	10533
45°	4721	10371

DIMENSIONS FOR REFERENCE ONLY. TECHNICAL MODIFICATIONS RESERVED. LATER ADAPTATIONS ARE POSSIBLE BASED ON PROJECT REQUIREMENTS AND RELATED DETAIL DESIGN.
THIS PIPE CONNECTION PLAN MAY NOT BE USED FOR FINAL DESIGN!

Alle Flanschanschluesse am Motor sind mit Gegenflanschen versehen (Blindflansch), ausgenommen der Anschluss fuer den Gasaustritt am Turbolader. Die Blindflansche sind nach dem betreffenden Rohrdurchmesser des Werftanschlusses aufzubohren.
THE PIPE CONNECTIONS ON THE ENGINE ARE SUPPLIED WITH MATING FLANGES (BLIND), WITH EXCEPTION OF THE TURBOCHARGER EXHAUST GAS OUTLET. BLIND FLANGES TO BE DRILLED TO MATCH PIPE DIA SUPPLIED BY THE SHIPYARD.

Die Gewinde-Anschluesse werden komplett geliefert
SCREWED CONNECTIONS ARE SUPPLIED COMPLETE

*1) Optionelle Ausfuehrung (wenn verlangt)
OPTIONAL EXECUTION (IF REQUIRED)

*2) Standard Ausfuehrung
STANDARD EXECUTION
Vorschlag Endgueltige Position ist mit Werft zu bestimmen
PROPOSAL. FINAL POSITION TO BE DETERMINED IN ACCORDANCE WITH SHIPYARD

*3) Externale Ausfuehrung (wenn verlangt)
EXTERNAL EXECUTION (IF REQUIRED)

Internes TL Oelsystem
INTERNAL TC OIL SYSTEM
3xMET83-MB

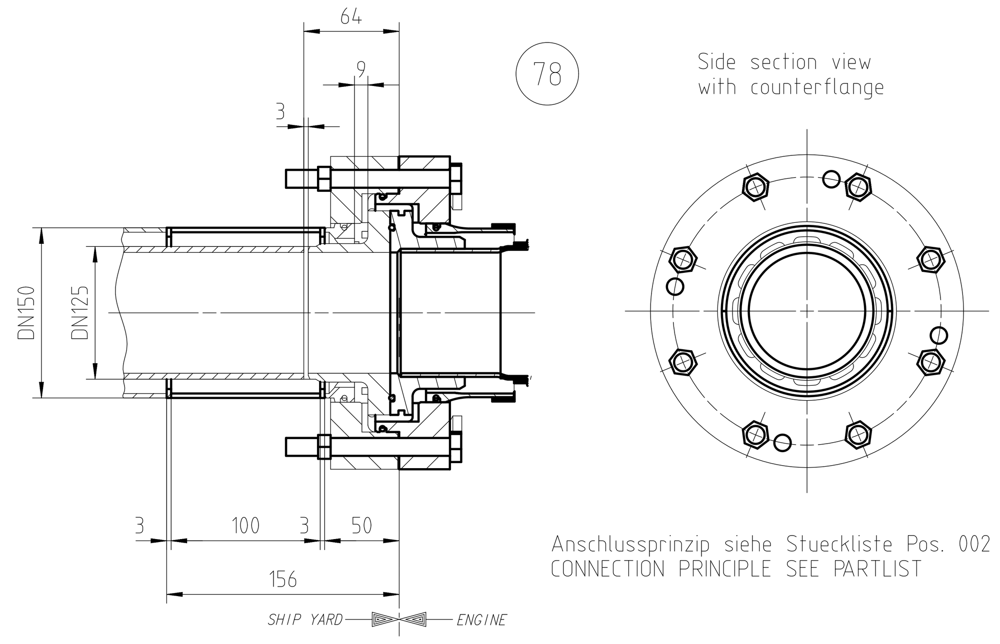

Anschlussprinzip siehe Stueckliste Pos. 002
CONNECTION PRINCIPLE SEE PARTLIST

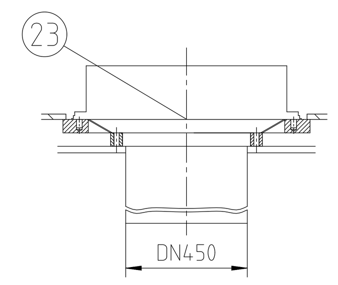

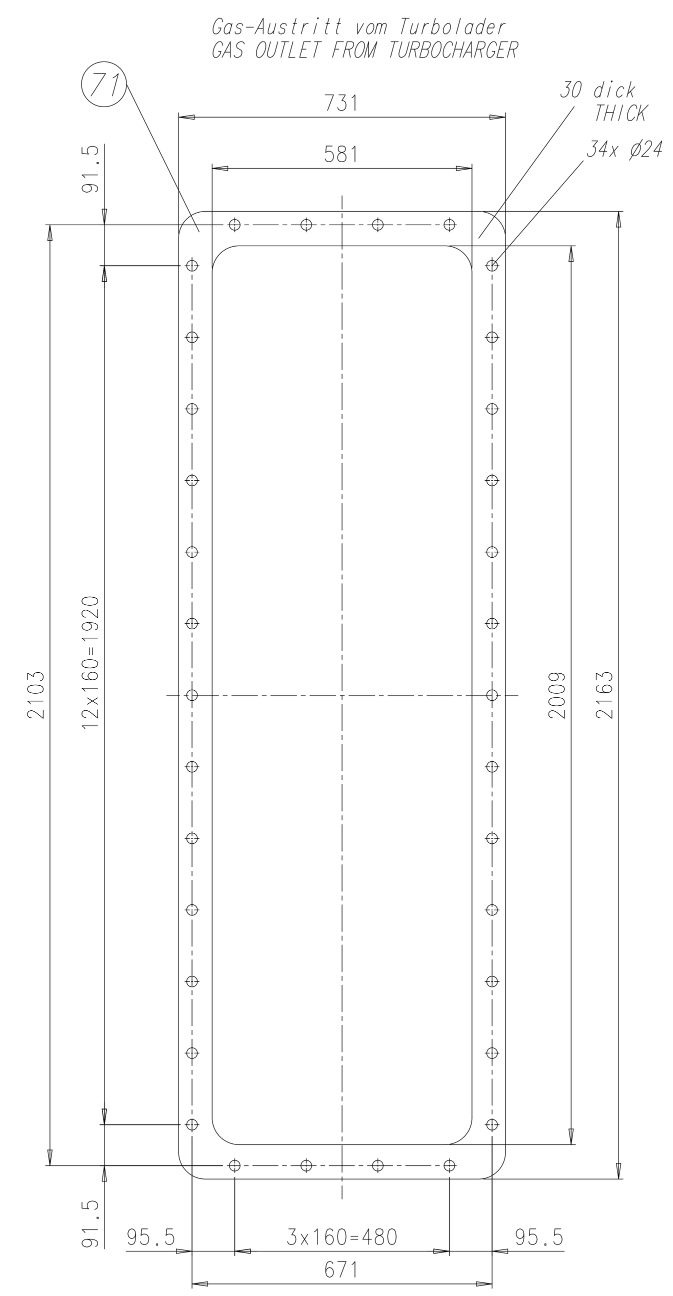

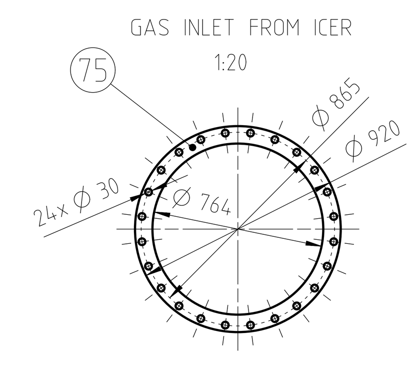

SURFACE PROTECTION SEE GROUP 0344
TOLERANCING PRINCIPLE ISO8015
GENERAL TOLERANCES ACCORDING TO ISO2768-mK

Prod.	10X92DF-2.0						
Rev.	Creator	Approver	Approval Date	Change ID	Change Synopsis	E	C
-	zta101	yzh102	10.08.2021	CNAA000449	main drawing introduced	-	-

Approved | Activity Code

WIN GD Winterthur Gas & Diesel

PIPE CONNECTION PLAN

Scale 1:50	NX	Units [mm] [kg]	Basic Material	Net Weight 0.001
		Main Design Yes	Design Group 8020 / Q-Code XXXXX	Standard WDS
		Qty per Engine	A0 / Item ID PTAA008553	Drawing Page/s 1/2

Dimension

Copyright Winterthur Gas & Diesel Ltd. All rights reserved. By taking possession of the drawing the recipient recognizes and honours these rights. Neither the whole nor any part of this drawing may be used in any way for construction, fabrication, marketing or any other purpose nor copied in any way nor made accessible to third parties without the previous written consent of Winterthur Gas & Diesel Ltd.

NO.				DG.	X	Y	Z
1		CYLINDER COOLING WATER INLET	DN PN	8301	NOT USED		
2		CYLINDER COOLING WATER INLET	DN 250 PN 5/6	8305	⌀CYL.10 -2930	2017	7941
3		CYLINDER COOLING WATER OUTLET	DN 250 PN 5/6	8310	⌀CYL.10 -2930	3170	7941
4		CYLINDER COOLING WATER VENTING	DN PN	8310	NOT USED		
5		CYLINDER COOLING WATER DRAIN OUTLET	DN 32 PN 5/6	8313	⌀CYL.10 -2930	2590	7941
6		SAC DRAIN OUTLET	DN PN	8314	NOT USED		
7		SAC-LT-COOLING WATER INLET	DN 450 PN 5/6	8335	-5101	6050	7238.5
8		SAC-LT-COOLING WATER OUTLET	DN 450 PN 5/6	8335	-4628	6050	7770
9		SAC-HT-COOLING WATER INLET	DN PN	8335	NOT USED		
10		SAC-HT-COOLING WATER OUTLET	DN PN	8335	NOT USED		
11		WATER FOR CLEANING PLANT TC AND SAC INLET	DN 20 PN 10	8338	⌀CYL.10 6245	5800	8088
12		AIR FOR CLEANING PLANT TC AND SAC INLET	DN 20 PN 10	8338	⌀CYL.10 6325	5800	8088
13		OILY WATER FROM RECEIVER OUTLET	DN 65 PN 5/6	8352	1600	2775	4035
14		TURBOCHARGER DIRTY WATER OUTLET	DN PN	8355	NOT USED		
15		WATER DRAIN FROM WATERSEPERATOR OUTLET	DN PN	8356	NOT USED		
16		SAC CONDENSATE WATER OUTLET	DN 80 PN 5/6	8357	-343	3054	-272
17		SAC WASHING WATER OUTLET	DN PN	8357	NOT USED		
18		SAC VENTING VENTING	DN 125 PN 5/6	8357	1600	3004	4030
19							
20		OIL PIPE DRAIN FUEL PUMPS OUTLET	DN PN	8454	NOT USED		
21		LEAKAGE OIL FUEL SIDE OUTLET	DN 200 PN 5/6	8481	-6414	-4500	7780
22-1	SEE DETAIL	OIL DRAIN BEDPLATE HORIZONTAL		1110	NOT USED		
22-2	SEE DETAIL	OIL DRAIN BEDPLATE HORIZONTAL					
22-3	SEE DETAIL	OIL DRAIN BEDPLATE HORIZONTAL					
22-4	SEE DETAIL	OIL DRAIN BEDPLATE HORIZONTAL					
23-1	SEE DETAIL	OIL DRAIN BEDPLATE VERTICAL		1110 9722	0	340	-2957
23-2	SEE DETAIL	OIL DRAIN BEDPLATE VERTICAL			-4992	340	-2957
23-3	SEE DETAIL	OIL DRAIN BEDPLATE VERTICAL			⌀CYL.10 6360	340	-2957
23-4	SEE DETAIL	OIL DRAIN BEDPLATE VERTICAL			⌀CYL.10 1590	340	-2957
24		CYLINDER LUB. OIL OUTLET	DN PN	8472	NOT USED		
25		MAIN LUBRICATING OIL INLET	DN 200 PN 5	8406	1800	2450	3941
26*3)		LUBRICATING OIL TURBOCHARGER INLET	DN 80 PN 5/6	8430	-5470	6103.5	7995
27		LUBRICATING OIL TURBOCHARGER OUTLET	DN 250 PN 5/6	8431	-4475	5910	7308
28		LUBRICATING OIL FUEL PUMPS OUTLET	DN PN	8445	NOT USED		
29		DIRTY OIL DRAIN SUPPLY UNIT OUTLET	DN PN	8452	NOT USED		

NO.				DG.	X	Y	Z
30*3)		LUBRICATING OIL CROSSHEAD INLET	DN 125 PN 16	8455	1800	2857	3835
31		DIRTY OIL LEAKAGE FROM ENGINE OUTLET	DN PN	8463	NOT USED		
32		CYLINDER LUB. OIL (HIGH BN) INLET	DN 32 PN 5	8475	⌀CYL.10 -2836	-1772	8079
33		CYLINDER LUB. OIL (LOW BN) INLET	DN 32 PN 5	8475	⌀CYL.10 -2836	-1610	8079
34		LEAKAGE OIL DRIVING END OUTLET	DN PN	8482	NOT USED		
35		LEAKAGE OIL FREE END OUTLET	DN PN	8483	NOT USED		
36		DIRTY OIL PISTON UNDERSIDE OUTLET	DN 100 PN 5/6	8487	-6726.5	-3000	0
37		LEAKAGE OIL GLAND BOX OUTLET	DN 40 PN 5/6	8488	1600	-1710	5476
38		OIL PIPE DRAIN SUPPLY UNIT OUTLET	DN 100 DN25 *3) PN 5/6	8454	-6976	-3000	0
39		LEAKAGE DRAIN CYLINDER BLOCK OUTLET	DN PN	8462	NOT USED		
40		STARTING AIR PIPE INLET	DN 200 PN 30/40	8605	2203	-1316	8076
41		VENTING CRANKCASE OUTLET	DN 100 PN 5/6	1410	⌀CYL.10 -842.5	550	5431
42		VENTING WASTE GATE OUTLET	DN PN	8609	NOT USED		
43-1		VENTING TURBOCHARGER OUTLET	DN 100 PN 5/6	8610	-2765.5	4837	10787
43-2		VENTING TURBOCHARGER OUTLET	DN 100 PN 5/6	8610	-8823.5	4837	10787
43-3		VENTING TURBOCHARGER OUTLET	DN 100 PN 5/6	8610	⌀CYL.10 525.5	4837	10787
44		VENTING CYLINDER COOLING WATER OUTLET	DN 12 PN 5/6	8313	⌀CYL.10 -1383	2049	10063
45		CONTROL AIR SUPPLY INLET	DN 15 PN 12	8630	⌀CYL.5 -2151	-174	8090
46		CONTROL AIR SUPPLY INLET	DN PN	4605	NOT USED		
47							
48		ICER PURGE AIR SUPPLY OUTLET	DN PN	86??	NOT DEFINED YET		
49		FUEL INLET	DN 100 PN 16	8702	-10307	-3750	3223
50		FUEL RETURN OUTLET	DN 100 PN 16	8704	-10057	-3750	3223
51		FUEL LEAKAGE RAIL UNIT OUTLET	DN 50 PN 5/6	8740	-6644	-4500	7922
52		FUEL LEAKAGE OUTLET	DN 80 PN 5/6	8744	-6739	-3250	0
53		FUEL LEAKAGE HP-PIPES OUTLET	DN PN	8742	NOT USED		
54		FUEL LEAKAGE INJECTION PUMP OUTLET	DN PN	8743	NOT USED		
55							
56		FUEL LEAKAGE ICU OUTLET	DN PN	8745	NOT USED		
57-1		DRAIN PIPES VARIOUS OUTLET	DN 40 PN 5/6	8746	1300	-2900	94.5
57-2		DRAIN PIPES VARIOUS OUTLET	DN 40 PN 5/6		1300	2900	94.5
58							
59		TRACE HEATING FUEL INLET	DN 25 PN 16	8810	⌀CYL.10 -2150	-1979	8083
60		TRACE HEATING FUEL OUTLET	DN 20 PN 16	8810	-6781	-3132.5	0

NO.				DG.	X	Y	Z
61		TRACE HEATING FUEL INLET	DN PN	8812	NOT USED		
62		TRACE HEATING FUEL OUTLET	DN PN	8812	NOT USED		
63		TRACE HEATING FUEL CIRCULATION INLET	DN PN	8820	NOT USED		
64		TRACE HEATING FUEL CIRCULATION OUTLET	DN PN	8823	NOT USED		
65							
66							
67		FIRE EXTINGUISHING PLANT CYLINDER BLOCK INLET	DN 40 PN 10	8830	⌀CYL.10 -2150	-2710	8176
68		FIRE EXTINGUISHING PLANT RAIL UNIT INLET	DN PN	8831	NOT USED		
69		FIRE EXTINGUISHING PLANT RAIL UNIT INLET	DN PN	8832	NOT USED		
70							
71-1	SEE DETAIL	EXHAUST GAS TURBOCHARGER OUTLET		6506 6509	-1895	SEE PAGE ONE	
71-2	SEE DETAIL	EXHAUST GAS TURBOCHARGER OUTLET			-7953		
71-3	SEE DETAIL	EXHAUST GAS TURBOCHARGER OUTLET			-14313		
72	SEE DETAIL	EXHAUST GAS BY-PASS OUTLET	DN PN	8103 8108	NOT USED		
73		EXHAUST WASTE GATE OUTLET	DN PN	8135	IF USED, SEE DAAD116127		
74							
75-1		ICER INLET	DN PN	86??	NOT DEFINED YET		
75-2		ICER INLET	DN PN	86??	NOT DEFINED YET		
75-3		ICER INLET	DN PN	86??	NOT DEFINED YET		
76		SUPPLY UNIT FUEL PILOT VALVE INLET	DN 15 PN 16	8790	-3979	-3134.5	3108
77		SUPPLY UNIT FUEL PILOT VALVE OUTLET	DN 20 PN 16	8790	-4088	-3134.5	3110
78*4)	SEE DETAIL	GAS SUPPLY PIPE INLET	PN 15	8903	⌀CYL.5 (-3806)	(1529)	(7890)
79		GAS RELEASE PIPE, ENGINE SIDE OUTLET	DN 150 PN 10	8910	2621	350	8585
80		GAS RELEASE PIPE, SYSTEM SIDE OUTLET	DN 20 PN 10	8910	⌀CYL.10 -2281	-350	8087
81		ANNULAR SPACE AIR VENTING PIPE INLET	DN 32 PN 10	8910	2287	350	8179
82		GAS MONITOR. PIPE PISTON U. SIDE	DN 20 PN 4	8911	-4357.5	-3099	3108
83		IGPR NITROGEN INLET	DN 20 PN 20	8904	⌀CYL.5 -2400	582	8087

⌀CYL.10 = MEASSURED FROM FREE END (CYL. 10)

FREE END - X + DRIVING END

FUEL SIDE - Y + EXHAUST SIDE

BOTTOM - Z + TOP

*3) Externale Ausfuehrung (wenn verlangt)
EXTERNAL EXECUTION (IF REQUIRED)

*4) INSTALLATION TOLERANCE +/- 1 mm
COMPENSATOR HAS TO BE INSTALLED STRESS FREE

3x MET83MB

SURFACE PROTECTION SEE GROUP 0344
TOLERANCING PRINCIPLE ISO8015
GENERAL TOLERANCES ACCORDING TO ISO2768-mK

zfa101 | yzh102 | 10.08.2021 | CNAA000449 | main drawing introduced

Approved

PTAA008553 | 2/2

ISO

PN	DN	OUT.DIA.	THICK	DIM. FOR SCREWS			
6 bar	25	100	14	75	4	M10	11
	32	120	16	90	4	M12	14
	40	130	16	100	4	M12	14
	50	140	16	110	4	M12	14
	65	160	16	130	4	M12	14
	80	190	18	150	4	M16	18
	100	210	18	170	4	M16	18
	125	240	20	200	8	M16	18
	150	265	20	225	8	M16	18
	200	320	22	280	8	M16	18
	250	375	24	335	12	M16	18
	300	440	24	395	12	M20	22
	350	490	26	445	12	M20	22
	400	540	28	495	16	M20	22
	450	595	30	550	16	M20	22
	500	645	30	600	20	M20	22

PN	DN	OUT.DIA.	THICK	DIM. FOR SCREWS			
16 bar	25	115	16	85	4	M12	14
	32	140	18	100	4	M16	18
	40	150	18	110	4	M16	18
	50	165	19	125	4	M16	18
	65	185	20	145	8	M16	18
	80	200	20	160	8	M16	18
	100	220	22	180	8	M16	18
	125	250	22	210	8	M16	18
	150	285	24	240	8	M20	22
	200	340	26	295	12	M20	22
	250	405	32	355	12	M24	26
	300	460	32	410	12	M24	26
	350	520	35	470	16	M24	26
	400	580	38	525	16	M27	30
	450	640	42	585	20	M27	30
	500	715	46	650	20	M30	33

PN	DN	OUT.DIA.	THICK	DIM. FOR SCREWS			
10 bar	25	115	16	85	4	M12	14
	32	140	18	100	4	M16	18
	40	150	18	110	4	M16	18
	50	165	19	125	4	M16	18
	65	185	20	145	8	M16	18
	80	200	20	160	8	M16	18
	100	220	22	180	8	M16	18
	125	250	22	210	8	M16	18
	150	285	24	240	8	M20	22
	200	340	24	295	8	M20	22
	250	395	26	350	12	M20	22
	300	445	26	400	12	M20	22
	350	505	28	460	16	M20	22
	400	565	32	515	16	M24	26
	450	615	38	565	20	M24	26
	500	670	38	620	20	M24	26

PN	DN	OUT.DIA.	THICK	DIM. FOR SCREWS			
40 bar	25	115	16	85	4	M12	14
	32	140	18	100	4	M16	18
	40	150	18	110	4	M16	18
	50	165	20	125	4	M16	18
	65	185	22	145	8	M16	18
	80	200	24	160	8	M16	18
	100	235	26	190	8	M20	22
	125	270	28	220	8	M24	26
	150	300	30	250	8	M24	26
	200	375	36	320	12	M27	30
	250	450	44	385	12	M30	33
	300	515	48	450	16	M30	33
	350	580	54	510	16	M33	36
	400	660	60	585	16	M36	39

JIS

PN	DN	OUT.DIA.	THICK	DIM. FOR SCREWS			
5 bar	25	95	10	75	4	M10	12
	32	115	12	90	4	M12	15
	40	120	12	95	4	M12	15
	50	130	14	105	4	M12	15
	65	155	14	130	4	M12	15
	80	180	14	145	4	M16	19
	100	200	16	165	8	M16	19
	125	235	16	200	8	M16	19
	150	265	18	230	8	M16	19
	200	320	20	280	8	M20	23
	250	385	22	345	12	M20	23
	300	430	22	390	12	M20	23
	350	480	24	435	12	M22	25
	400	540	24	495	16	M22	25
	450	605	24	555	16	M22	25
	500	655	24	605	20	M22	25

PN	DN	OUT.DIA.	THICK	DIM. FOR SCREWS			
16 bar	25	125	14	90	4	M16	19
	32	135	16	100	4	M16	19
	40	140	16	105	4	M16	19
	50	155	16	120	8	M16	19
	65	175	18	140	8	M16	19
	80	200	20	160	8	M20	23
	100	225	22	185	8	M20	23
	125	270	22	225	8	M22	25
	150	305	24	260	12	M22	25
	200	350	26	305	12	M22	25
	250	430	28	380	12	M24	27
	300	480	30	430	16	M24	27
	350	540	34	480	16	M30	33
	400	605	38	540	16	M30	33
	450	675	40	605	20	M30	33
	500	730	42	660	20	M30	33

PN	DN	OUT.DIA.	THICK	DIM. FOR SCREWS			
10 bar	25	125	14	90	4	M16	19
	32	135	16	100	4	M16	19
	40	140	16	105	4	M16	19
	50	155	16	120	4	M16	19
	65	175	18	140	4	M16	19
	80	185	18	150	8	M16	19
	100	210	18	175	8	M16	19
	125	250	20	210	8	M20	23
	150	280	22	240	8	M20	23
	200	330	22	290	12	M20	23
	250	400	24	355	12	M22	25
	300	445	24	400	16	M22	25
	350	490	26	445	16	M22	25
	400	560	28	510	16	M24	27
	450	620	30	565	20	M24	27
	500	675	30	620	20	M24	27

PN	DN	OUT.DIA.	THICK	DIM. FOR SCREWS			
30 bar	25	130	20	95	4	M16	19
	32	140	22	105	4	M16	19
	40	160	22	120	4	M20	23
	50	165	22	130	8	M16	19
	65	200	26	160	8	M20	23
	80	210	28	170	8	M20	23
	100	240	32	195	8	M22	25
	125	275	36	230	8	M22	25
	150	325	38	275	12	M24	27
	200	370	42	320	12	M24	27
	250	450	48	390	12	M30	33
	300	515	52	450	16	M30	33
	350	560	54	495	16	M30	33
	400	630	60	560	16	M36	39

Substitute for:

PC	Q-Code	X	X	X	X	X

Modif											
	A	EAAD084180	04.10.2012								
		Number	Drawn Date		Number	Drawn Date		Number	Drawn Date		Number	Drawn Date

WÄRTSILÄ

Product
W-2S

Flange Dimensions

Made	19.09.2007	N. Brand	Main Drw.	Page 1 / 1	Material ID **107.390.729.500**
Chkd	27.09.2007	M. Frei	Design Group **8020**	Drawing ID **107.390.729**	Rev **A**
Appd	27.09.2007	B. Haag			

Copyright Wärtsilä. All rights reserved. By taking possession of the drawing, the recipient recognizes and honors these rights. Neither the whole nor any part of this drawing may be used in any way for construction, fabrication, marketing or any other purpose nor copied in any way nor made accessible to third parties without the previous written consent of Wärtsilä.

Download "DXF file"

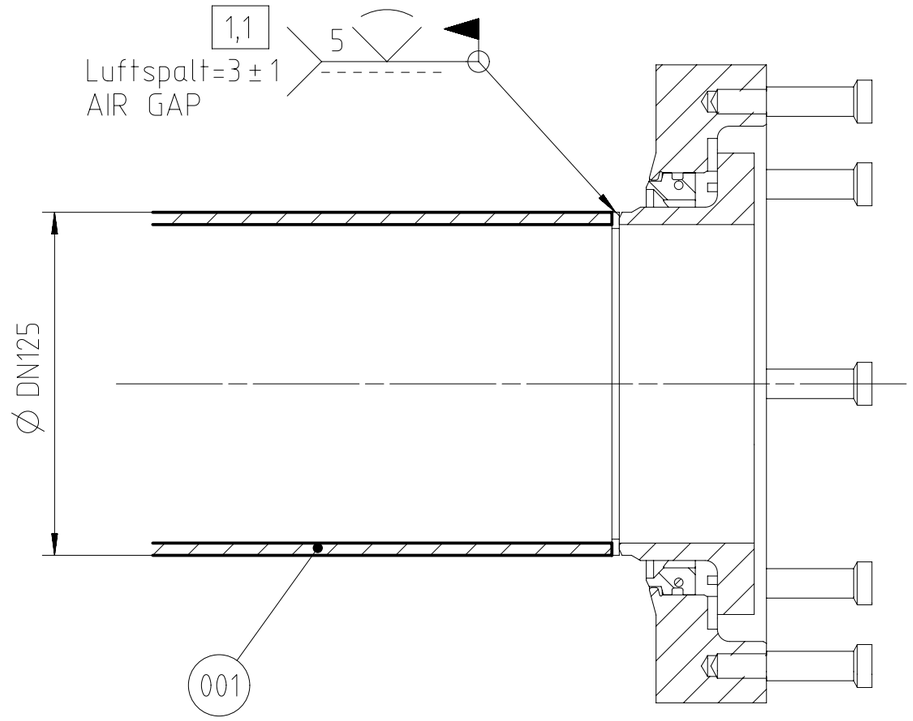

Rohrklasse PIPE CLASS	I	Medium MEDIUM	Brennstoff Gas FUEL GAS	Pruefueberdruck TEST OVERPRESSURE	32	bar
Schweiss Qualitaet WELDING QUALITY LEVEL	B	Toleranzklasse TOLERANCE GRADE	A	Betr.druck OPER. PRESS.	16	bar

Benoetigte NDT Verfahren RQUIRED NDT METHODS *2	PT MT	100%	RT *1	100%	Kapitel CHAPTER	3.0

*1 100% UT only if welded with process 131 and 135 (GMAW) *2 visual inspection on ALL welds

This table specifies documents in accordance with "UR M72 - Certification of Engine Components" (or DIN EN 10204-(2004) 'TYPES OF INSPECTION DOCUMENTS')

Additional class rules may apply. Please contact the relevant class society to determine actual requirements.

TEST TYPE:	CERTIFICATE TYPE:	TESTING FREQUENCY:
MATERIAL	MATERIAL IDENTIFICATION	-
STRUCTURAL COMPOSITION	INSPECTION CERTIFICATE W (3.1) (INDEPENDENT AUTHORITY)	EXAMINATION OF EACH PART
SURFACE CRACK DETECTION TEST	INSPECTION CERTIFICATE W (3.1) (INDEPENDENT AUTHORITY)	EXAMINATION OF EACH PART
PRESSURE TEST	INSPECTION CERTIFICATE W (3.1) (INDEPENDENT AUTHORITY)	EXAMINATION OF EACH PART

Unten erwaehnte Restriktionen gelten fuer RESTRICTIONS BELOW APPLY FOR ⇩	Pos. POS.	001

This table specifies documents in accordance with "UR M72 - Certification of Engine Components" (or DIN EN 10204-(2004) 'TYPES OF INSPECTION DOCUMENTS')

Additional class rules may apply. Please contact the relevant class society to determine actual requirements.

TEST TYPE:	CERTIFICATE TYPE:	TESTING FREQUENCY:
MATERIAL	MATERIAL IDENTIFICATION	-
CHEMICAL ANALYSIS	INSPECTION CERTIFICATE W (3.1) (INDEPENDENT AUTHORITY)	TEST PER CHARGE OR HEAT TREATMENT
TENSILE TEST	INSPECTION CERTIFICATE W (3.1) (INDEPENDENT AUTHORITY)	TEST PER CHARGE OR HEAT TREATMENT

TOLERANCE GRADES

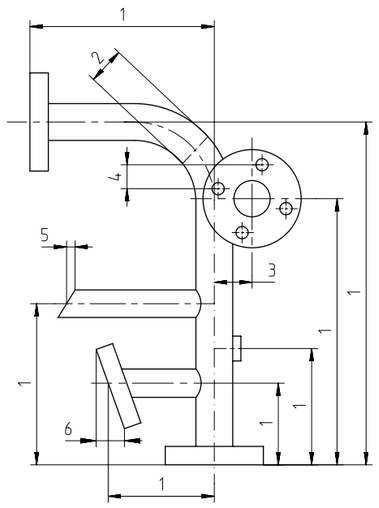

TOL. GRADE	DIMENSION NO. 1	2	3	4	5	6	
A	±1.0	*	±2.0	±2.0	±0.5	±0.5	≤DN150
B	±3.0	*	±3.0	±2.0	±0.5	±0.5	
C	±6.0	*	±3.0	±2.0	±0.5	±0.5	
A	±2.0	*	±2.0	±2.0	±1.0	±1.0	>DN150
B	±4.0	*	±3.0	±3.0	±1.0	±1.0	
C	±6.0	*	±3.0	±3.0	±1.0	±1.0	

* for these tolerances see chapter 2.2 of the piping instruction 4-107.354.915

QTY	SEQ NO	Material ID	Material Name / Dimension, Occ	Standard or Drawing	Basic Material / Material Standard	Weight GR./NET
0m	002	008.010.031.831	PIPE DN150 / 165.2 x 3.4		W-FA-2Cr18Ni14Mo-AT-T	13,6
0m	001	008.010.032.829	PIPE DN125 / 139.8 x 5		W-FA-2Cr18Ni14Mo-AT-T	16,6

Free space for lic.

Q-Code: 1S1P1

Standard: JIS

Main Drw.

Modif. | Number | Drawn date | Number | Drawn date | Number | Drawn date | Number | Drawn date

WIN GD Winterthur Gas & Diesel

Product: W-2S

WELD. AND TEST INSTRUCTIONS

Schweiss- und Pruefvorschrift

Units mm kg	NX		Basic Material				Net Weight 0,001
Made	16.12.2020 hzh102 Zhang		Scale 1:2,5	Size A3	Page 1/2	Material ID	PAAD371236
Chkd	17.12.2020 nba032 Baumgartner		Design Group 8903	Drawing ID	DAAD138326	Rev.	–
Appd	18.12.2020 sth017 Thalmann						

SURFACE PROTECTION SEE GROUP 0344

TOLERANCING PRINCIPLE ISO8015

Approved

DID - DIMENSIONAL DRAWING - Confidential

Copyright Winterthur Gas & Diesel Ltd All rights reserved By taking possession of the drawing the recipient recognizes and honours these rights. Neither the whole nor any part of this drawing may be used in any way for construction, fabrication, marketing or any other purpose nor copied in any way nor made accessible to third parties without the previous written consent of Winterthur Gas & Diesel Ltd

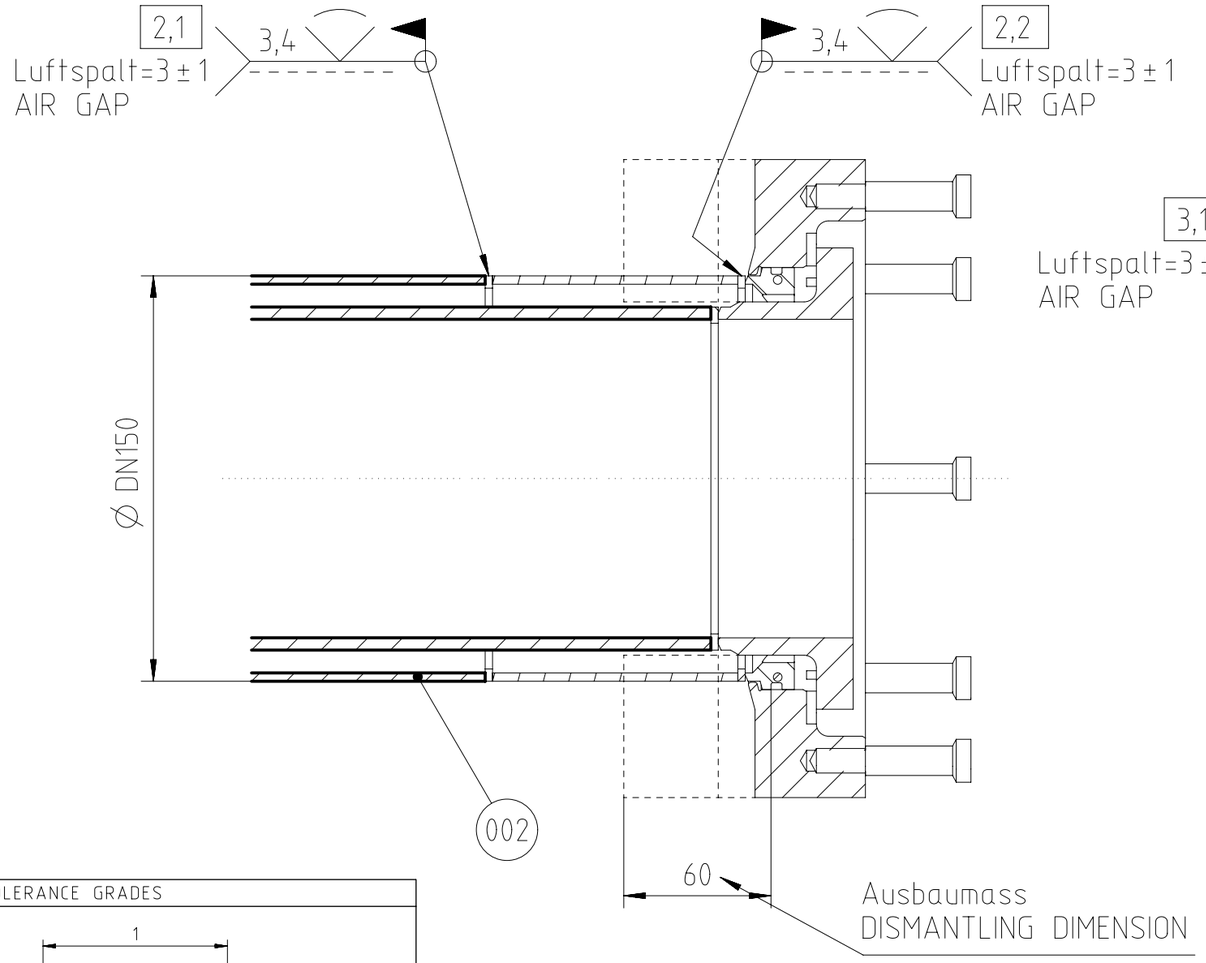

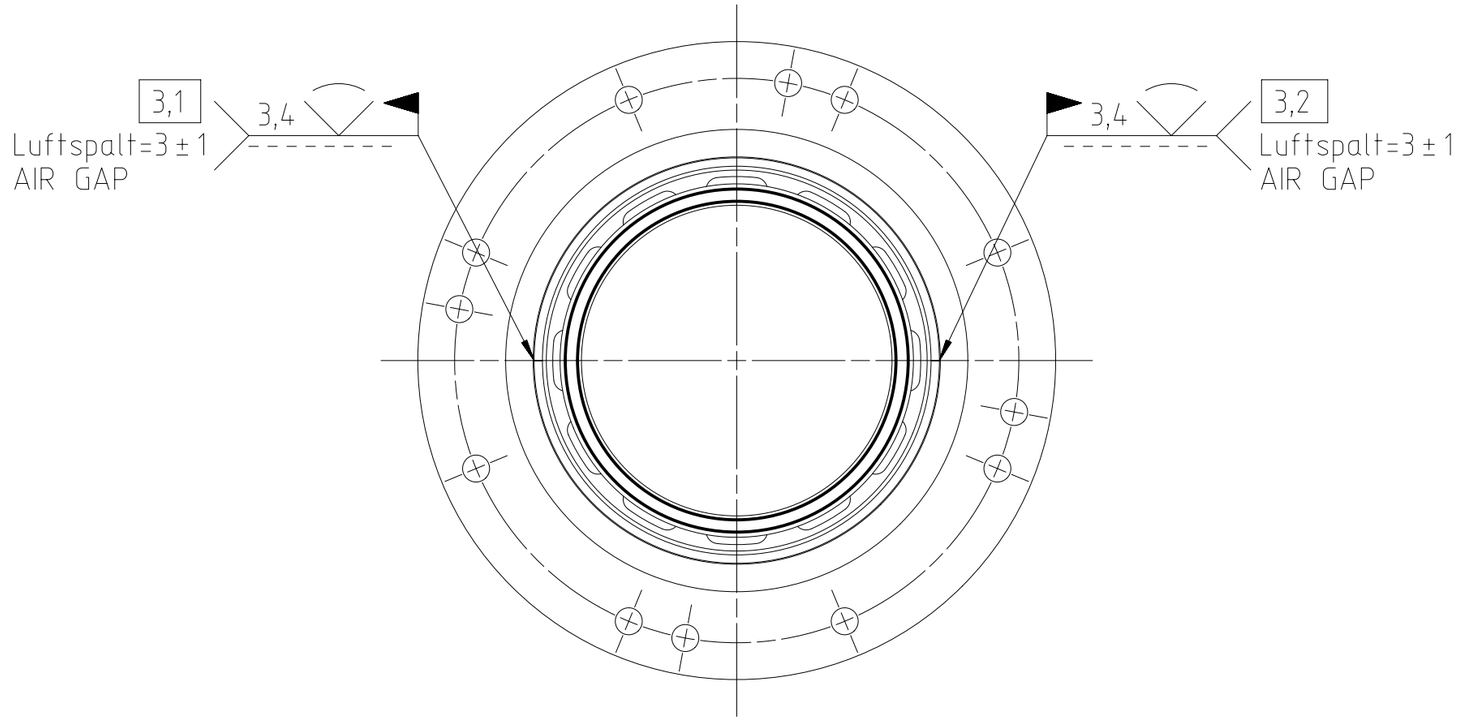

TOLERANCE GRADES

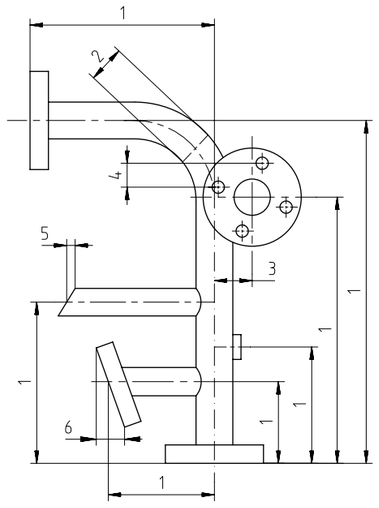

TOL. GRADE	DIMENSION NO. 1	2	3	4	5	6	
A	±1.0	*	±2.0	±2.0	±0.5	±0.5	≤DN150
B	±3.0	*	±3.0	±2.0	±0.5	±0.5	
C	±6.0	*	±3.0	±2.0	±0.5	±0.5	
A	±2.0	*	±2.0	±2.0	±1.0	±1.0	>DN150
B	±4.0	*	±3.0	±3.0	±1.0	±1.0	
C	±6.0	*	±3.0	±3.0	±1.0	±1.0	

* for these tolerances see chapter 2.2 of the piping instruction 4-107.354.915

Rohrklasse PIPE CLASS	II	Medium MEDIUM	Brennstoff Gas FUEL GAS	Pruefueberdruck TEST OVERPRESSURE		32	bar
Schweiss Qualitaet WELDING QUALITY LEVEL	C	Toleranzklasse TOLERANCE GRADE	A	Betr.druck OPER. PRESS.		16	bar

Benoetigte NDT Verfahren RQUIRED NDT METHODS *2	PT MT	10 %	RT *1	10 %	Kapitel CHAPTER	3.0

*1 100% UT only if welded with process 131 and 135 (GMAW) *2 visual inspection on ALL welds

This table specifies documents in accordance with "UR M72 - Certification of Engine Components" (or DIN EN 10204-(2004) 'TYPES OF INSPECTION DOCUMENTS')

Additional class rules may apply. Please contact the relevant class society to determine actual requirements.

TEST TYPE:	CERTIFICATE TYPE:	TESTING FREQUENCY:
MATERIAL	MATERIAL IDENTIFICATION	-
STRUCTURAL COMPOSITION	INSPECTION CERTIFICATE W (3.1) (INDEPENDENT AUTHORITY)	EXAMINATION OF EACH PART
SURFACE CRACK DETECTION TEST	INSPECTION CERTIFICATE W (3.1) (INDEPENDENT AUTHORITY)	EXAMINATION OF EACH PART
PRESSURE TEST	INSPECTION CERTIFICATE W (3.1) (INDEPENDENT AUTHORITY)	EXAMINATION OF EACH PART

SURFACE PROTECTION SEE GROUP 0344

TOLERANCING PRINCIPLE ISO8015

Free space for lic.

Q-Code 1S1P1

Standard JIS

Main Drw.

Modif. | Number | Drawn date | Number | Drawn date | Number | Drawn date | Number | Drawn date

WIN GD Winterthur Gas & Diesel

Product W-2S

WELD. AND TEST INSTRUCTIONS

Schweiss- und Pruefvorschrift

Units mm kg | NX | Basic Material | Net Weight 0,001

Made 16.12.2020 hzh102 Zhang | Scale 1:2,5 | Size A3 | Page 2/2 | Material ID PAAD371236

Chkd 17.12.2020 nba032 Baumgartner | Design Group 8903

Appd 18.12.2020 sth017 Thalmann | Drawing ID DAAD138326 | Rev. –

Approved

DID - DIMENSIONAL DRAWING - Confidential

Copyright Winterthur Gas & Diesel Ltd All rights reserved By taking possession of the drawing the recipient recognizes and honours these rights Neither the whole nor any part of this drawing may be used in any way for construction, fabrication, marketing or any other purpose nor copied in any way nor made accessible to third parties without the previous written consent of Winterthur Gas & Diesel Ltd

WinGD-10X92DF-2.0_Pipe-Connection-Plan

TRACK CHANGES

DATE	SUBJECT	DESCRIPTION
2021-10-12	DRAWING SET	First web upload

DISCLAIMER

© Copyright by Winterthur Gas & Diesel Ltd.
All rights reserved. No part of this document may be reproduced or copied in any form or by any means (electronic, mechanical, graphic, photocopying, recording, taping or other information retrieval systems) without the prior written permission of the copyright owner.

THIS PUBLICATION IS DESIGNED TO PROVIDE AN ACCURATE AND AUTHORITATIVE INFORMATION WITH REGARD TO THE SUBJECT-MATTER COVERED AS WAS AVAILABLE AT THE TIME OF PRINTING. HOWEVER, THE PUBLICATION DEALS WITH COMPLICATED TECHNICAL MATTERS SUITED ONLY FOR SPECIALISTS IN THE AREA, AND THE DESIGN OF THE SUBJECT-PRODUCTS IS SUBJECT TO REGULAR IMPROVEMENTS, MODIFICATIONS AND CHANGES. CONSEQUENTLY, THE PUBLISHER AND COPYRIGHT OWNER OF THIS PUBLICATION CAN NOT ACCEPT ANY RESPONSIBILITY OR LIABILITY FOR ANY EVENTUAL ERRORS OR OMISSIONS IN THIS BOOKLET OR FOR DISCREPANCIES ARISING FROM THE FEATURES OF ANY ACTUAL ITEM IN THE RESPECTIVE PRODUCT BEING DIFFERENT FROM THOSE SHOWN IN THIS PUBLICATION. THE PUBLISHER AND COPYRIGHT OWNER SHALL UNDER NO CIRCUMSTANCES BE HELD LIABLE FOR ANY FINANCIAL CONSEQUENTIAL DAMAGES OR OTHER LOSS, OR ANY OTHER DAMAGE OR INJURY, SUFFERED BY ANY PARTY MAKING USE OF THIS PUBLICATION OR THE INFORMATION CONTAINED HEREIN.