SEQ NO	QTY	Item ID	Item Name / Dimension	Standard-ID	Basic Material	Net Weight
001	1	PAAD326456	DISMANTLING DIMENSIONS			0.001

Prod.				
	9 X92-B			

Change History

Rev.	Creator	Approver	Approval Date	Change ID	Change Synopsis	Activity Code	E	C
A	wta101	sth017	13.01.2022	CNAA001358	TC silence casing added		4	3
-	wta101	yzh102	02.08.2021	CNAA000439	main drawing introduced		-	-

Approved

WIN GD
Winterthur Gas & Diesel

ENGINE OUTLINE VIEW

Bill Of Material

Dimension

Copyright **Winterthur Gas & Diesel Ltd.** All rights reserved. By taking possession of the document the recipient recognizes and honours these rights. Neither the whole nor any part of this document may be used in any way for construction, fabrication, marketing or any other purpose nor copied in any way nor made accessible to third parties without the previous written consent of **Winterthur Gas & Diesel Ltd.**

Units	[m] [kg]	Basic Material				Net Weight	0.001
Main Design	Yes	Design Group	0812	Q-Code	XXXXX	Standard	WDS
Qty per	Engine	A4	Item ID	PTAA008473		BOM Page/s	01/01

Download "DXF file"

Abgasseite
EXHAUST SIDE

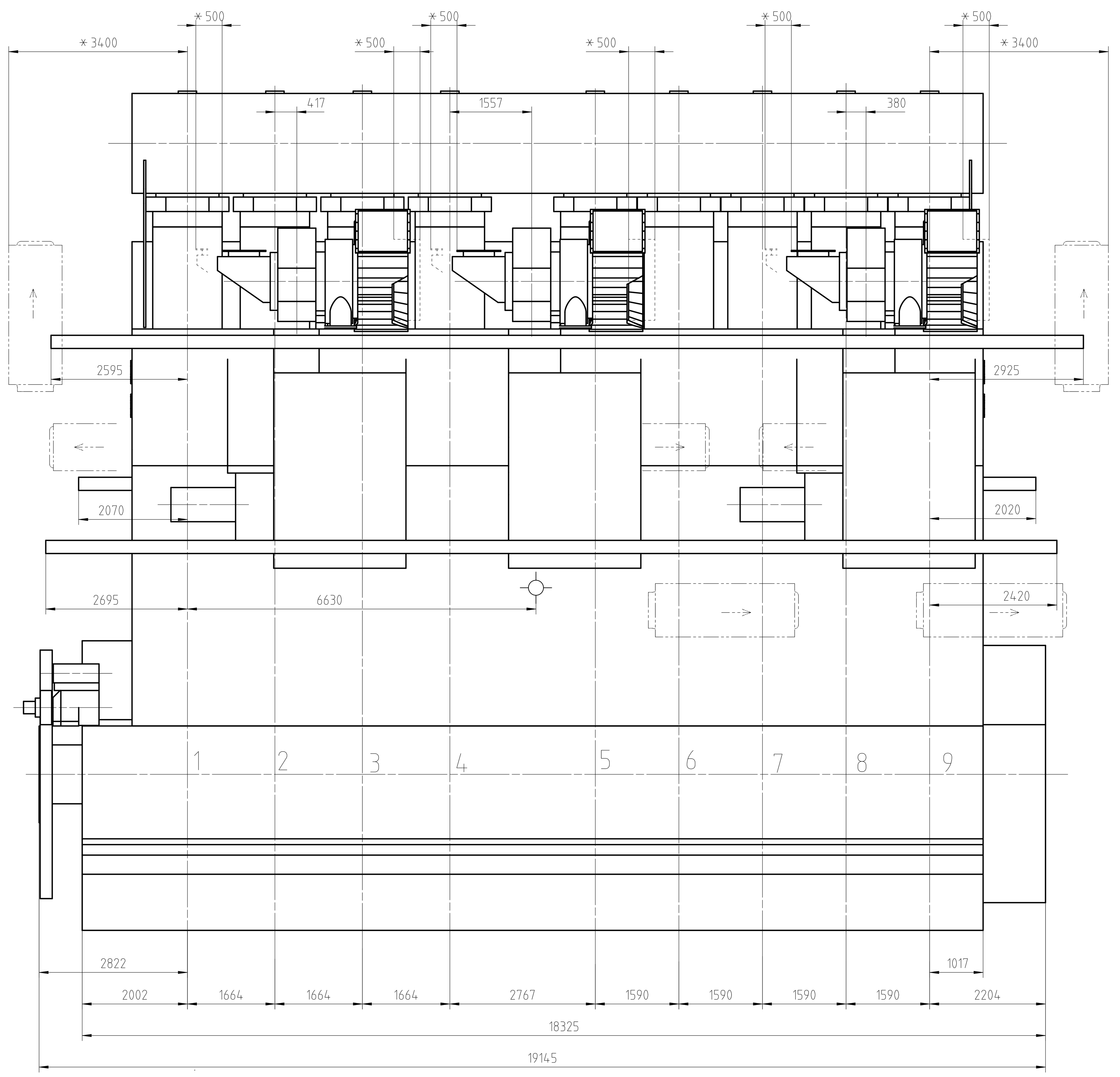

Antriebsseite
DRIVING END

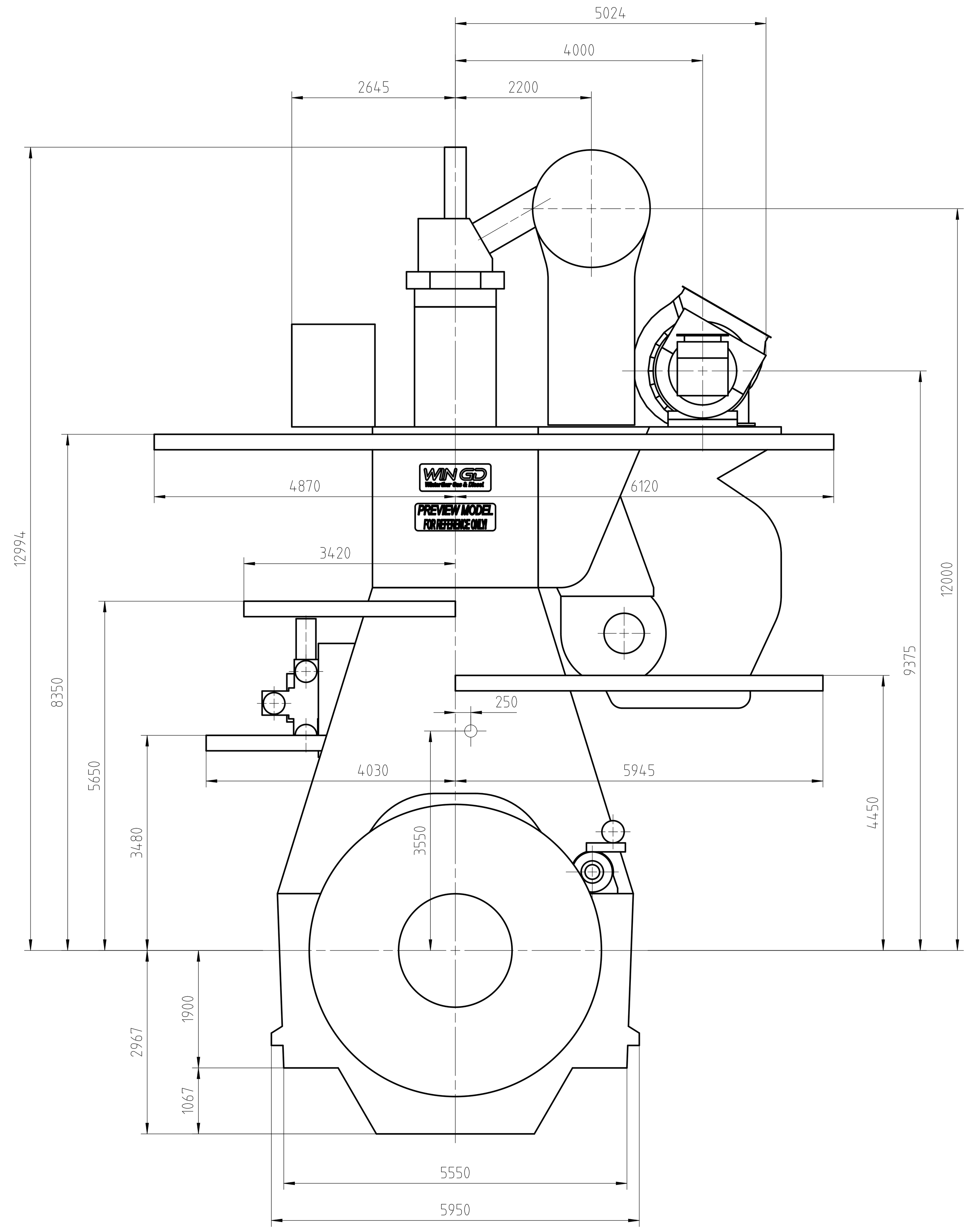

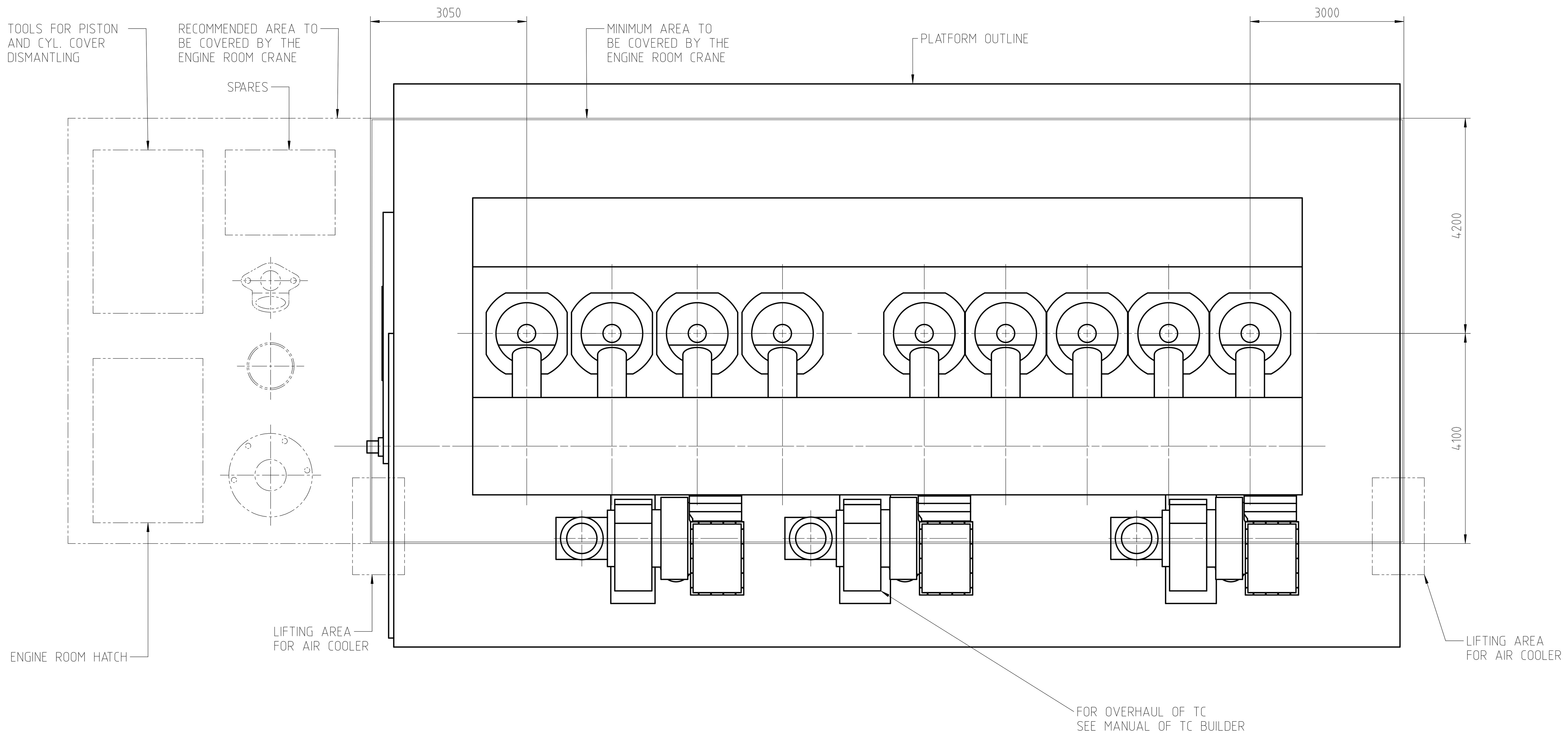

TURBOCHARGER 3xA175L

WEIGHT WITHOUT WATER AND OIL=1630t

✻ = SPACE FOR REMOVAL

⌖ APPROX. CENTRE OF GRAVITY

DIMENSIONS FOR REFERENCE ONLY!
THIS OUTLINE DRAWING CAN NOT
BE USED FOR FINAL DESIGN !
PLEASE TAKE THE CORRESPONDING
DESIGN GROUP!

Prod.	9X92-B						
Rev.	Creator	Approver	Approval Date	Change ID	Change Synopsis	E	C
A	wta101	sth017	13.01.2022	CNAA001358	TC silence casing added	4	3
-	wta101	yzh102	02.08.2021	CNAA000439	main drawing introduced	-	-

Change History — Approved — Activity Code

WIN GD Winterthur Gas & Diesel

ENGINE OUTLINE VIEW

separate BOM available	Dimension		
Scale 1:50 NX	Units [mm] [kg]	Basic Material	Net Weight 0.001
	Main Design Yes	Design Group 0812 / Q-Code XXXXX	Standard WDS
	Qty per Engine A0	Item ID PTAA008473	Drawing Page/s 1/1

SURFACE PROTECTION SEE GROUP 0344
TOLERANCING PRINCIPLE ISO8015
GENERAL TOLERANCES ACCORDING TO ISO2768-mK

Copyright Winterthur Gas & Diesel Ltd. All rights reserved. By taking possession of the drawing the recipient recognizes and honours these rights. Neither the whole nor any part of this drawing may be used in any way for construction, fabrication, marketing or any other purpose nor copied in any way nor made accessible to third parties without the previous written consent of Winterthur Gas & Diesel Ltd.

SEQ NO	QTY	Item ID	Item Name / Dimension	Standard-ID	Basic Material	Net Weight
001	1	PAAD326456	DISMANTLING DIMENSIONS			0.001

Prod.				
	9 X92-B			

Change History

Rev.	Creator	Approver	Approval Date	Change ID	Change Synopsis	Activity Code	E	C
B	wta101	sth017	15.11.2021	CNAA000959	HPSCR Upated		3	2
A	wta101	sth017	15.09.2021	CNAA000695	Free End Casing updated		3	2
-	wta101	sth017	20.04.2021		-		-	-

Approved

WIN GD
Winterthur Gas & Diesel

ENGINE OUTLINE VIEW

HP-SCR

Bill Of Material

Dimension

Copyright **Winterthur Gas & Diesel Ltd.** All rights reserved. By taking possession of the document the recipient recognizes and honours these rights. Neither the whole nor any part of this document may be used in any way for construction, fabrication, marketing or any other purpose nor copied in any way nor made accessible to third parties without the previous written consent of **Winterthur Gas & Diesel Ltd.**

Units	[m] [kg]	Basic Material				Net Weight	0.001
Main Design	Yes	Design Group	0812	Q-Code	XXXXX	Standard	WDS
Qty per	Engine	A4	Item ID	PAAD379675		BOM Page/s	01/01

Download "DXF file"

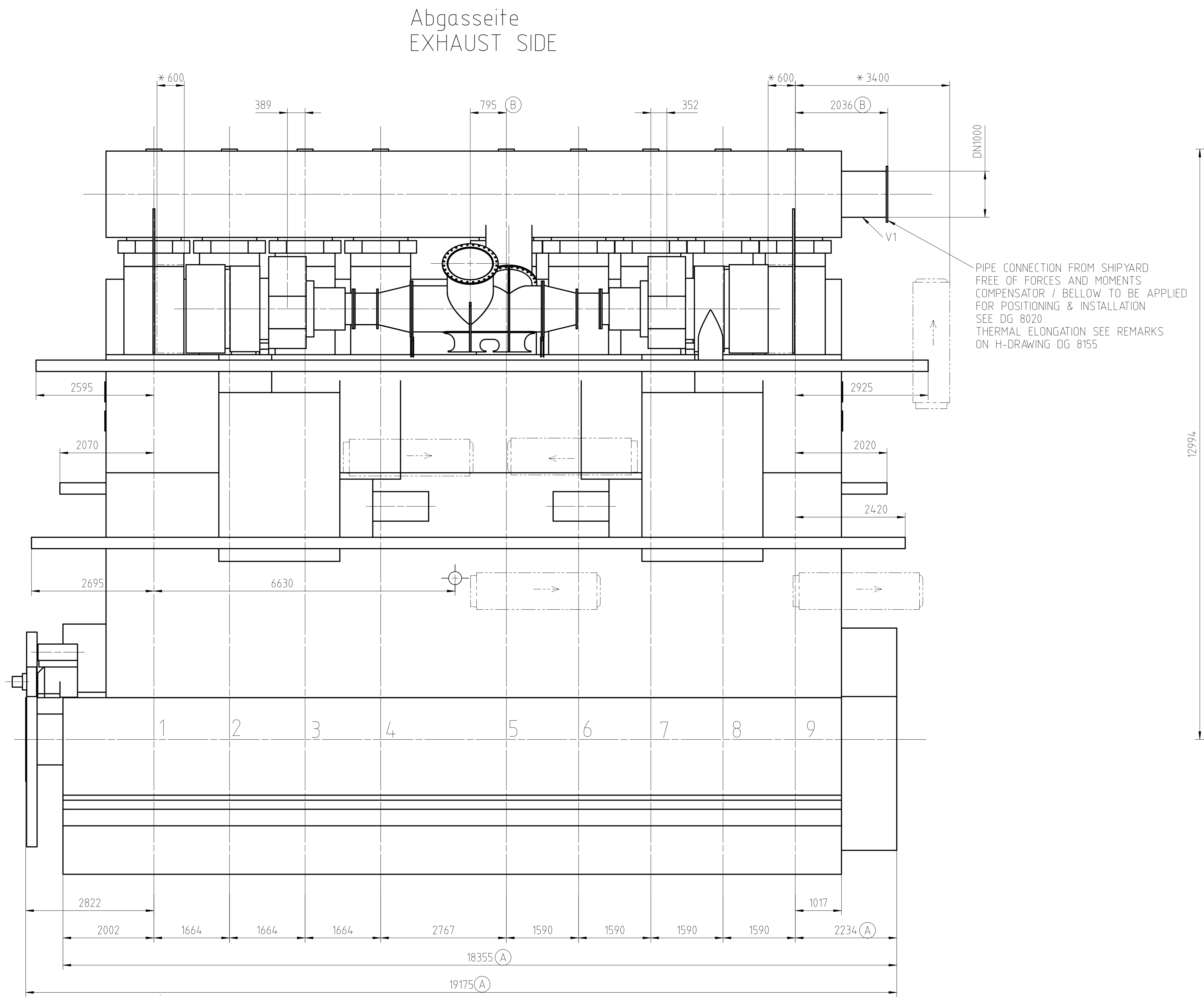

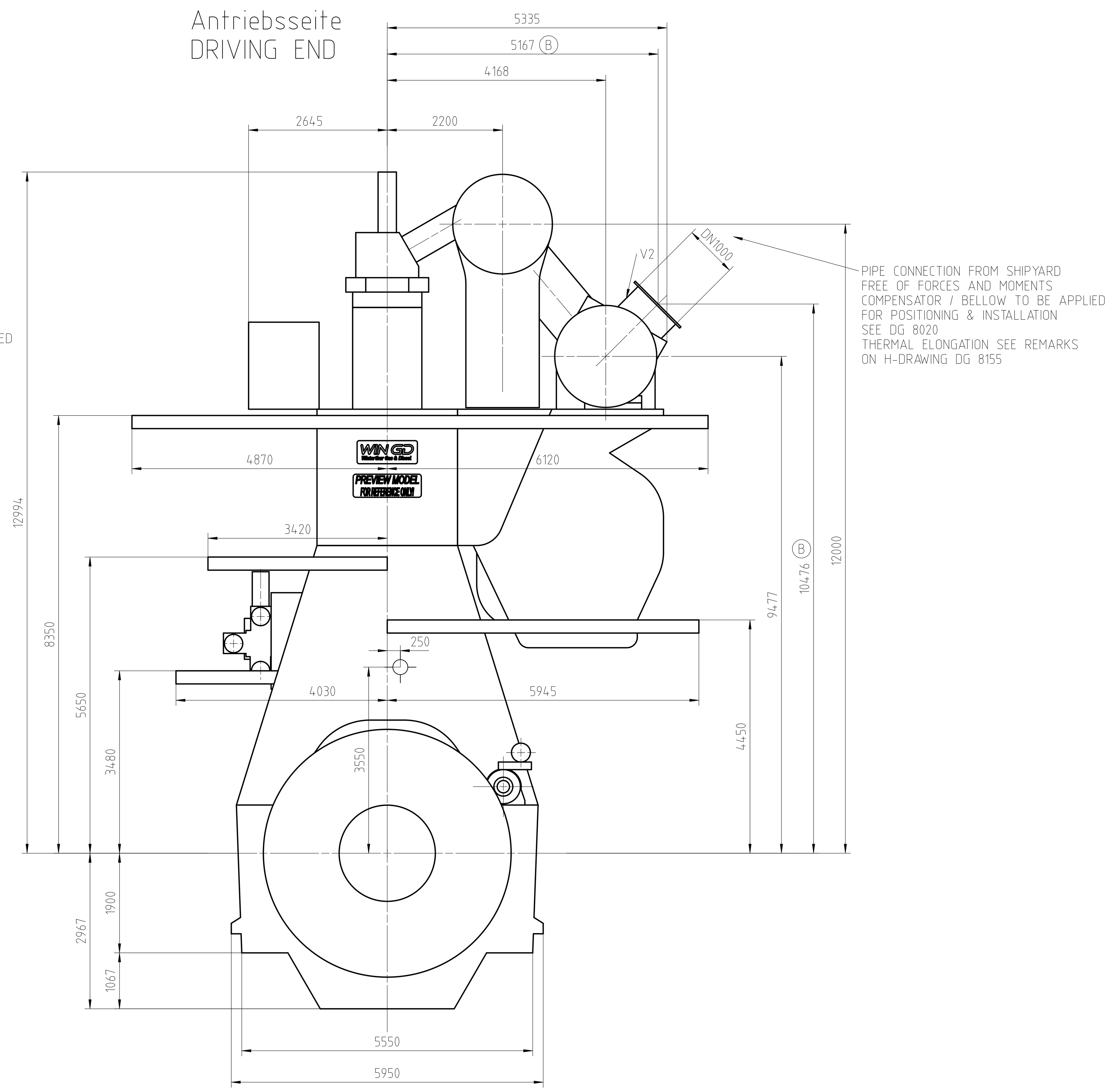

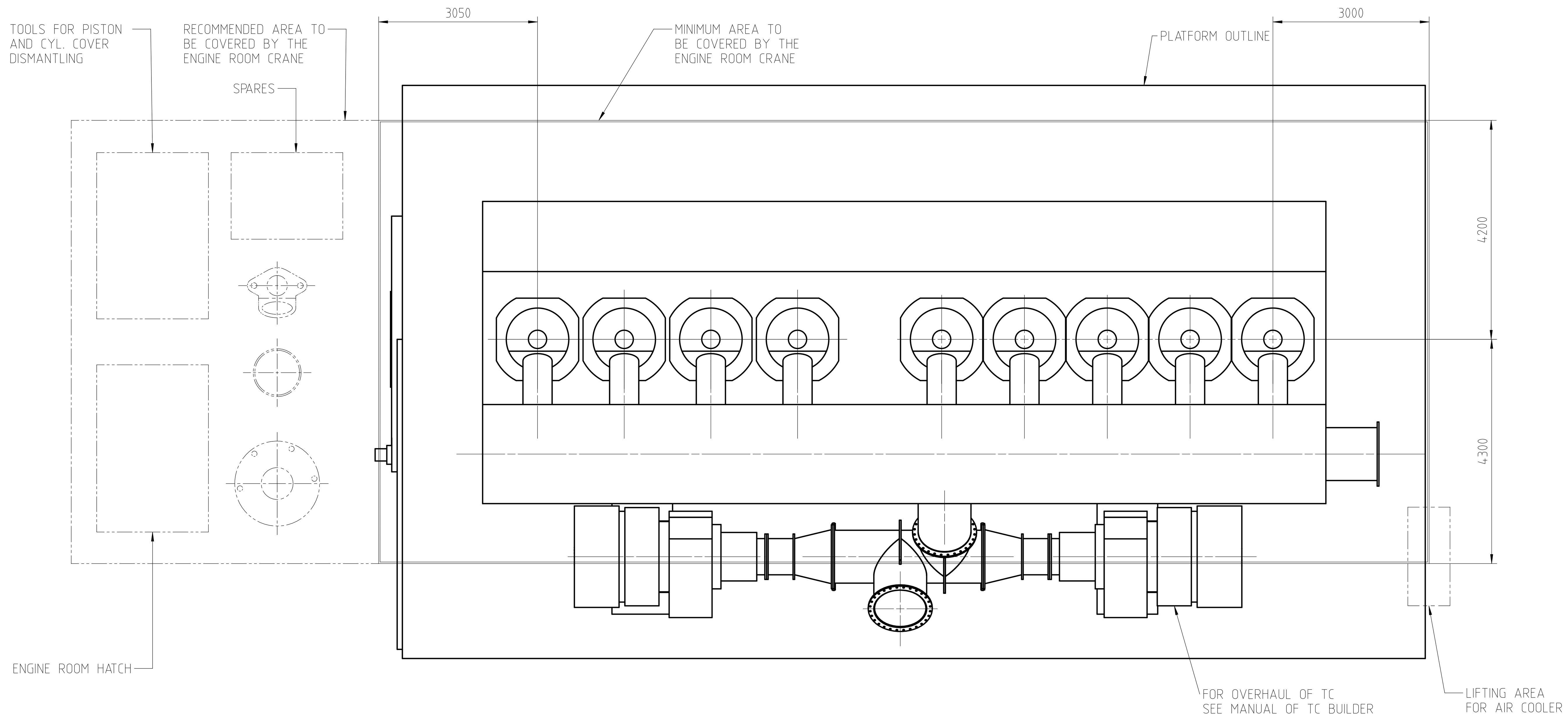

TURBOCHARGER 2xA280-L

WEIGHT WITHOUT WATER AND OIL=1660t
* = SPACE FOR REMOVAL

⌖ APPROX. CENTRE OF GRAVITY

DIMENSIONS FOR REFERENCE ONLY!
THIS OUTLINE DRAWING CAN NOT BE USED FOR FINAL DESIGN !
PLEASE TAKE THE CORRESPONDING DESIGN GROUP!

Prod.: 9X92-B

Rev.	Creator	Approver	Approval Date	Change ID	Change Synopsis	E	C
B	wta101	sth017	15.11.2021	CNAA000959	HPSCR Upated	4	3
A	wta101	sth017	15.09.2021	CNAA000695	Free End Casing updated	3	2
-	wta101	sth017	20.04.2021		-	-	-

Approved | Activity Code

WIN GD Winterthur Gas & Diesel

ENGINE OUTLINE VIEW
HP-SCR

Dimension

Scale 1:50	NX	Units [mm] [kg]	Basic Material
Net Weight	0.001	Main Design	Yes
Design Group	0812	Q-Code	XXXXX
Standard	WDS	Qty per	Engine
A0	Item ID	PAAD379675	Drawing Page/s 1/1

SURFACE PROTECTION SEE GROUP 0344
TOLERANCING PRINCIPLE ISO8015
GENERAL TOLERANCES ACCORDING TO ISO2768-mK

Copyright Winterthur Gas & Diesel Ltd. All rights reserved. By taking possession of the drawing the recipient recognizes and honours these rights. Neither the whole nor any part of this drawing may be used in any way for construction, fabrication, marketing or any other purpose nor copied in any way nor made accessible to third parties without the previous written consent of Winterthur Gas & Diesel Ltd.

Download
"DXF file"

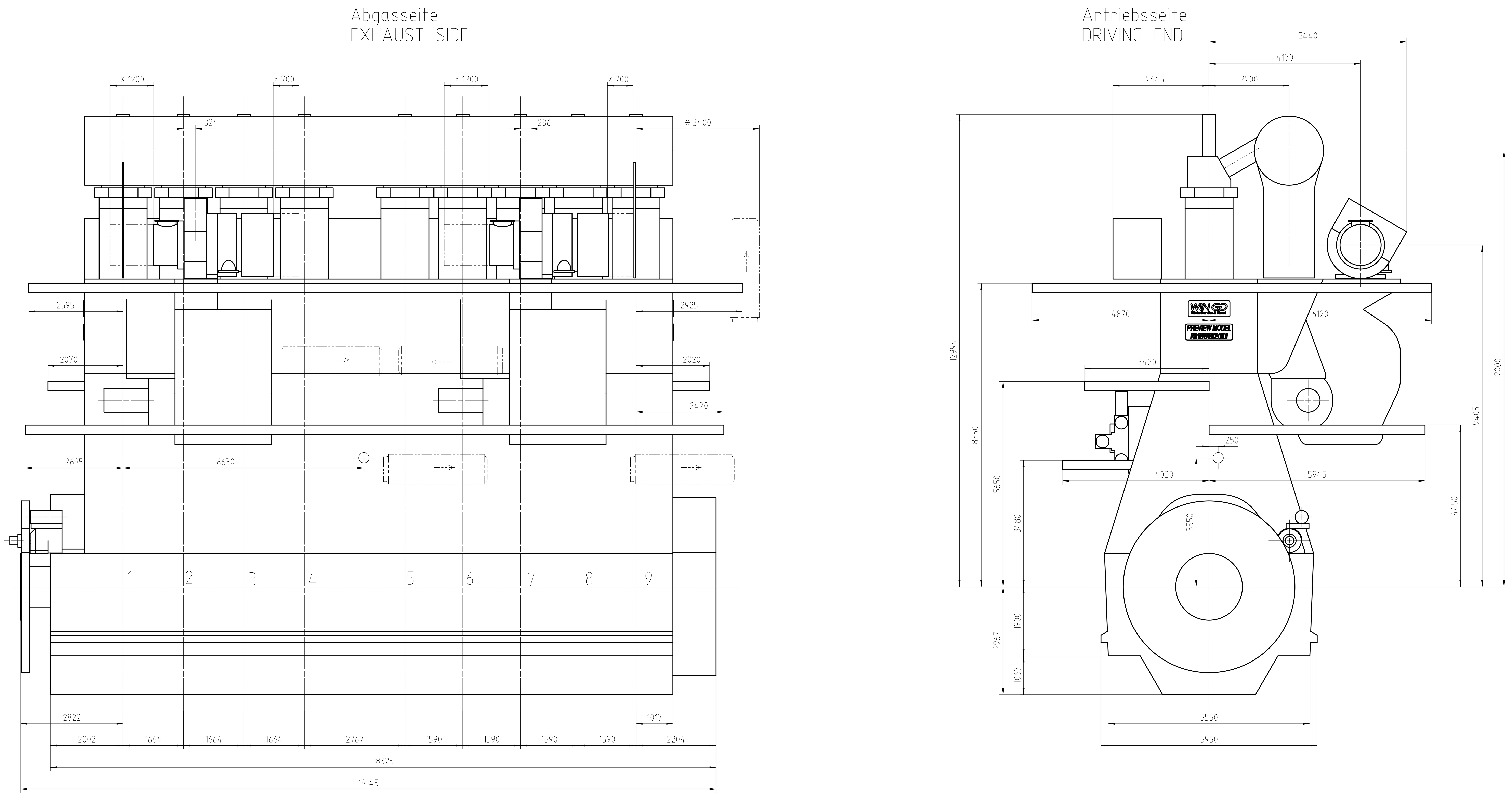

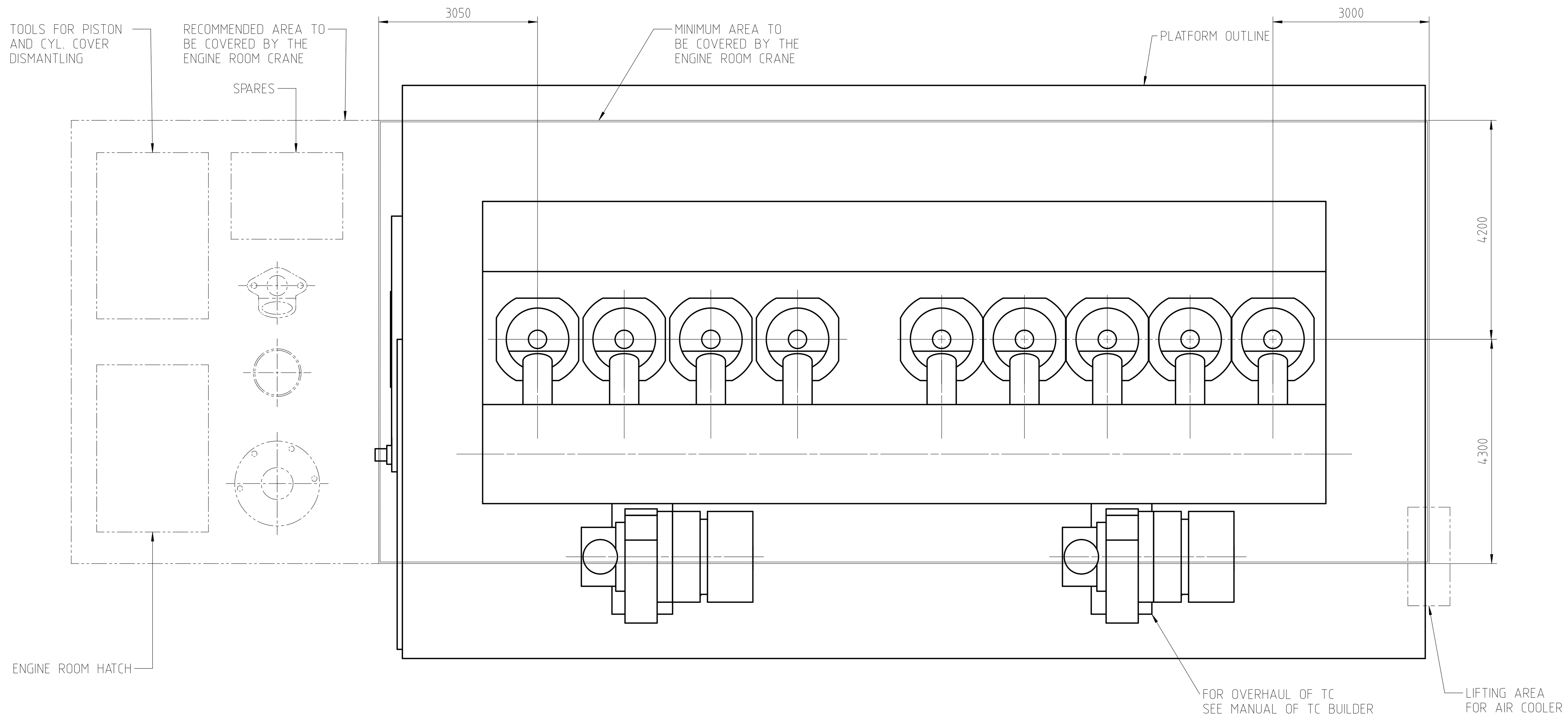

TURBOCHARGER 2xMET71MB-II

WEIGHT WITHOUT WATER AND OIL=1630t

∗ = SPACE FOR REMOVAL

APPROX. CENTRE OF GRAVITY

Quantity PER ENGINE	SEQ NO	Material ID	Material Name / Dimension, Occ	Standard or Drawing	Basic Material / Material Standard	Weight GR./NET
1	001	PAAD326456	DISMANTLING DIMENSIONS	DAAD115618		0,001

NetWeight 0,001

MaterialID PAAD379079

Free space for lic.

Q-Code XXXXX

Standard ISO; JIS

Main Drw. H

Modif.	Number	Drawn date	Number	Drawn date	Number	Drawn date	Number	Drawn date

DIMENSIONS FOR REFERENCE ONLY!
THIS OUTLINE DRAWING CAN NOT
BE USED FOR FINAL DESIGN !
PLEASE TAKE THE CORRESPONDING
DESIGN GROUP!

WIN GD Winterthur Gas & Diesel

Product 9X92-B

ENGINE OUTLINE VIEW

Motoransichten

Units mm kg	NX	Basic Material	Net Weight
SURFACE PROTECTION SEE GROUP 0344	Made 12.04.2021 wta101 Tan	Scale 1:50	Size A0 / Page 1/1 / Material ID
TOLERANCING PRINCIPLE ISO8015	Chkd 20.04.2021 ffa015 Fauler	Design Group 0812	Drawing ID DAAD142276 / Rev. –
GENERAL TOLERANCES ACCORDING TO ISO2768-mK	Appd 20.04.2021 sth017 Thalmann		

Approved

DID - DIMENSIONAL DRAWING - Confidential

Copyright Winterthur Gas & Diesel Ltd. All rights reserved. By taking possession of the drawing the recipient recognizes and honours these rights. Neither the whole nor any part of this drawing may be used in any way for construction, fabrication, marketing or any other purpose nor copied in any way nor made accessible to third parties without the previous written consent of Winterthur Gas & Diesel Ltd.

SEQ NO	QTY	ItemID	ItemName / Dimension	Standard-ID	BasicMaterial	Net Weight
001	1	PAAD326456	DISMANTLING DIMENSIONS			0.001

Prod

Change History

–	wta101	sth017	11.06.2021	CNAA000116	main drawing introduced	-	-
	Created	ApprBy	ApprDate	ChangeID	ChangeSynopsis / Approved / ActivityCode	E	C

WIN GD
Winterthur Gas & Diesel

ENGINE OUTLINE VIEW

Bill Of Material

Dimension

Copyright **Winterthur Gas & Diesel Ltd.** All rights reserved. By taking possession of the document the recipient recognizes and honours these rights. Neither the whole nor any part of this document may be used in any way for construction, fabrication, marketing or any other purpose nor copied in any way nor made accessible to third parties without the previous written consent of **Winterthur Gas & Diesel Ltd.**

Units	[m] [kg]	BasicMaterial			NetWeight 0.001
MainDesign	Y	DesignGroup	0812	Q-Code XXXXX	Standard WDS
Qty per	Engine	A4	Item ID	PTAA000502	BOM Page/s 01/01

Download "DXF file"

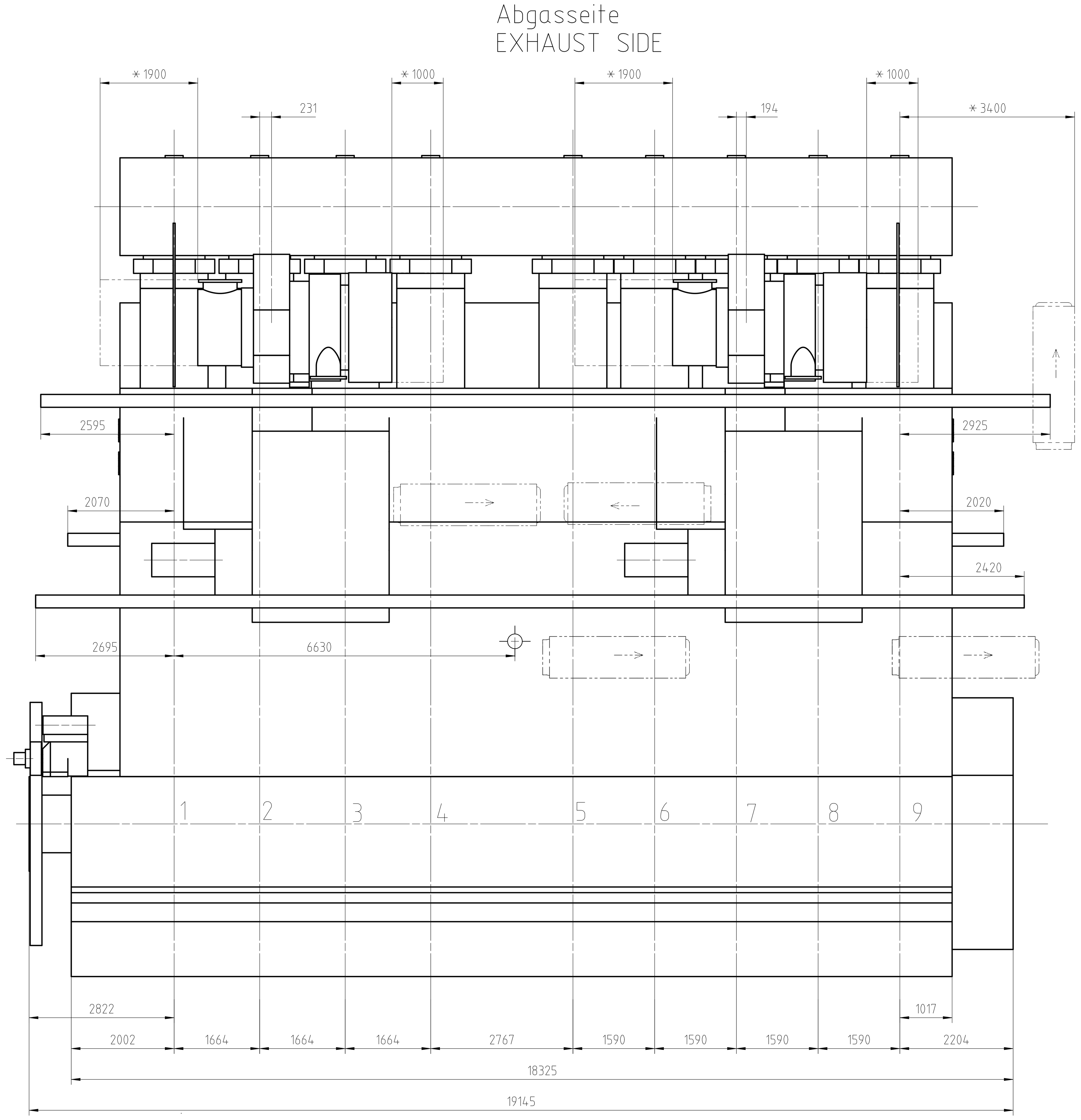

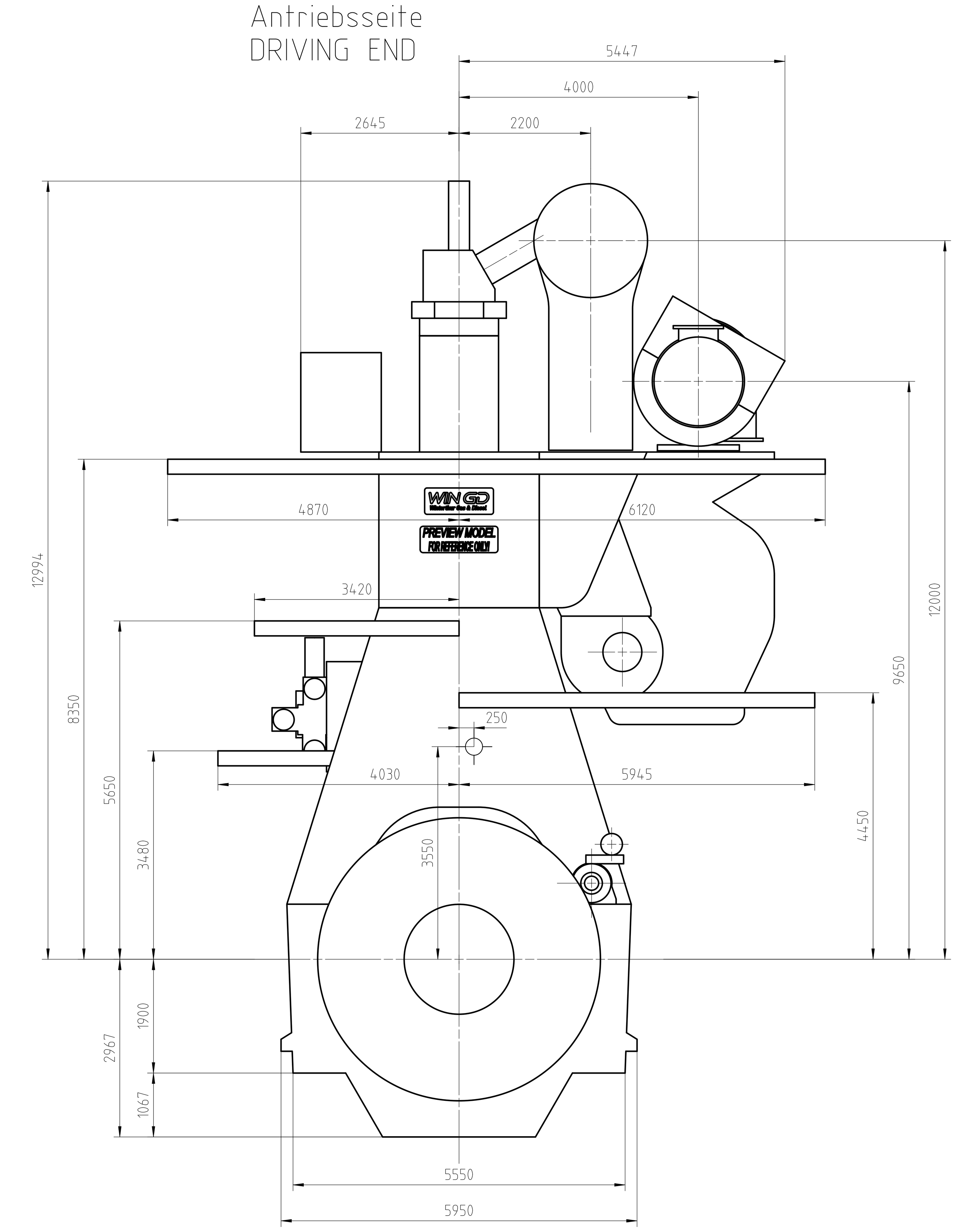

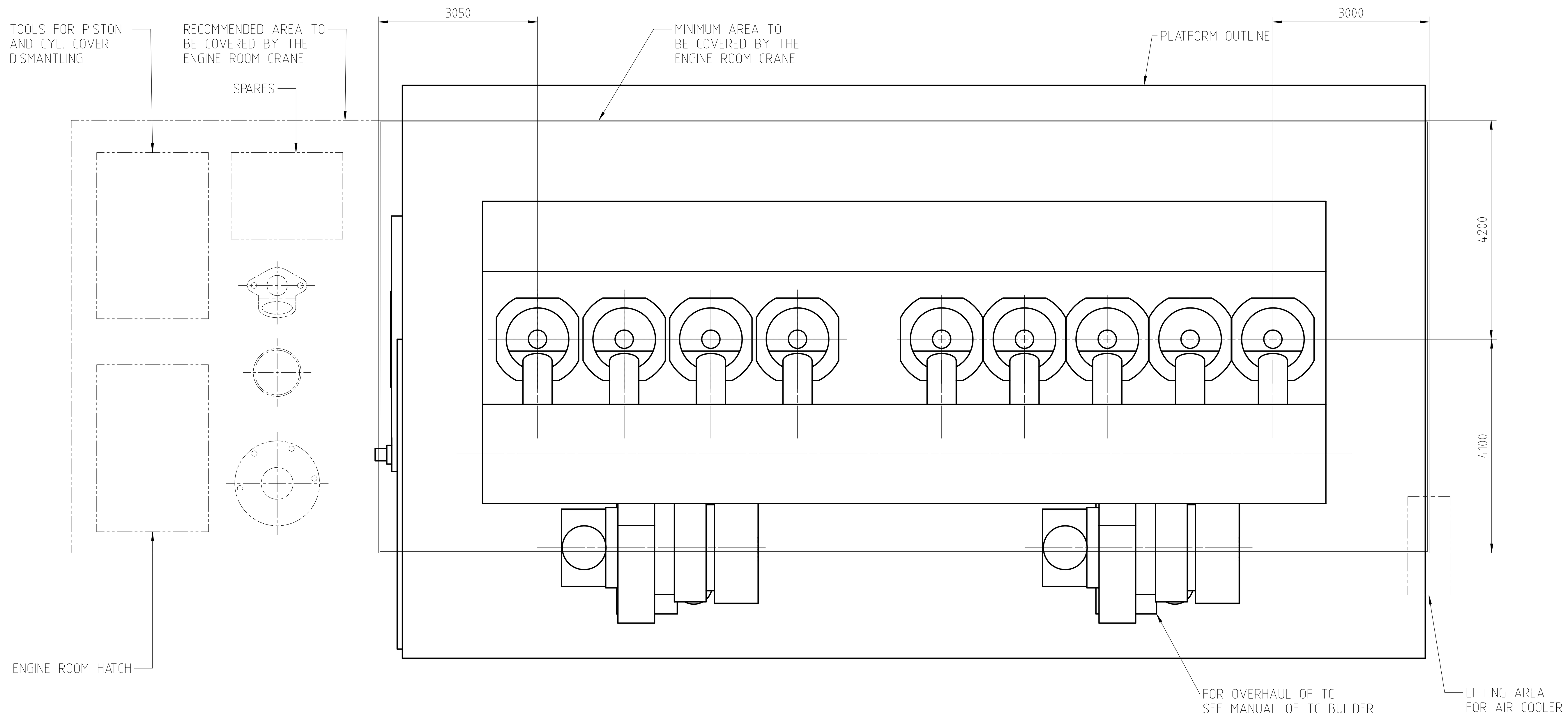

TURBOCHARGER 2xMET83MB

WEIGHT WITHOUT WATER AND OIL=1630t

∗ = SPACE FOR REMOVAL

⌖ APPROX. CENTRE OF GRAVITY

DIMENSIONS FOR REFERENCE ONLY!
THIS OUTLINE DRAWING CAN NOT
BE USED FOR FINAL DESIGN !
PLEASE TAKE THE CORRESPONDING
DESIGN GROUP!

Change history	Created	ApprBy	ApprDate	ChangeID	ChangeSynopsis	ActivityCode	E	C
–	wta101	sth017	11.06.2021	CNAA000116	–		-	-

Approved

WIN GD
Winterthur Gas & Diesel

ENGINE OUTLINE VIEW

separate BOM available

Dimension

Scale 1:50	NX	Units [mm] [kg]	Basic Material
Main Design Y	Design Group 0812	Q-Code XXXXX	NetWeight 0.001
Qty per Engine	A0	Item ID PTAA000502	Standard WDS
			Drawing Page/s 1/1

SURFACE PROTECTION SEE GROUP 0344

TOLERANCING PRINCIPLE ISO8015

GENERAL TOLERANCES ACCORDING TO ISO2768-mK

Copyright Winterthur Gas & Diesel Ltd. All rights reserved. By taking possession of the drawing the recipient recognizes and honours these rights. Neither the whole nor any part of this drawing may be used in any way for construction, fabrication, marketing or any other purpose nor copied in any way nor made accessible to third parties without the previous written consent of Winterthur Gas & Diesel Ltd.

Zuganker
TIE ROD

Kolben mit Stange komplett
und Stopfbuechse
PISTON WITH ROD COMPLETE
AND GLAND BOX

Gewicht ohne Hebevorrichtung:
WEIGHT WITHOUT LIFTING TOOL:

5680 kg (A)

Zylindereinsatz mit Wasserleitmantel
CYLINDER LINER WITH WATER GUIDE JACKET

Gewicht ohne Hebevorrichtung:
WEIGHT WITHOUT LIFTING TOOL:

10930 kg (A)

Zylinderdeckel mit Auslassventil
komplett und Wasserleitmantel
CYLINDER COVER WITH EXHAUST
VALVE COMPLETE AND WATER GUIDE JACKET

Gewicht:
WEIGHT:

8130 kg (A)

Auslassventil komplett
EXHAUST VALVE COMPLETE

Gewicht:
WEIGHT:

2195 kg (A)

Krankapazität min.
CRANE CAPACITY MIN. 13000 kg (A) (B)

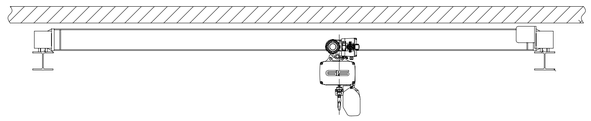

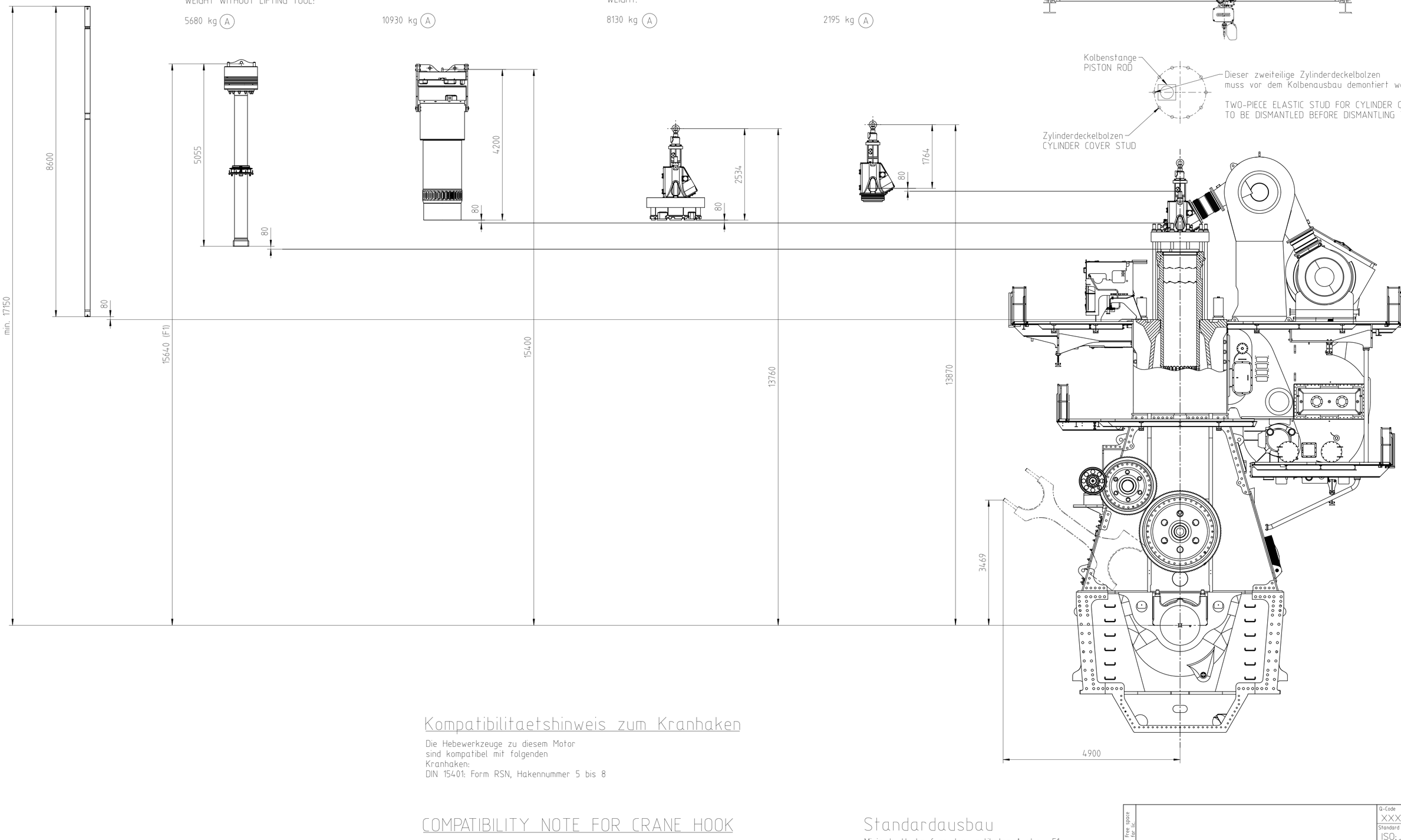

Kompatibilitaetshinweis zum Kranhaken

Die Hebewerkzeuge zu diesem Motor
sind kompatibel mit folgenden
Kranhaken:
DIN 15401: Form RSN, Hakennummer 5 bis 8

COMPATIBILITY NOTE FOR CRANE HOOK

THE LIFTING TOOLS FOR THIS ENGINE
ARE COMPATIBLE WITH FOLLOWING
CRANE HOOK:
DIN 15401: SHAPE RSN, HOOK NUMBER 5 TO 8

Standardausbau

Minimale Hoehe fuer den vertikalen Ausbau: F1

STANDARD DISMANTLING

MIN. HEIGHT FOR VERTICAL REMOVAL: F1

Free space for lic.								Q-Code XXXXX	Main Drw.
								Standard ISO; JIS	
Modif	A	EAAD091495	23.06.2020	B	EAAD094796	24.09.2020			
		Number	Drawn date		Number	Drawn date	Number	Drawn date	Number / Drawn date

WIN GD Winterthur Gas & Diesel

Product: W-X92-B

DISMANTLING DIMENSIONS

Ausbaumasse

Units mm kg	NX		Basic Material				Net Weight 0,001
Made	02.05.2019 Nagappa Mullur		Scale 1:50	Size A1	Page 1/3	Material ID PAAD326456	
Chkd	08.05.2019 sth017 Thalmann		Design Group 0812	Drawing ID DAAD115618			Rev. B
Appd	08.05.2019 mda006 Dacic						

SURFACE PROTECTION SEE GROUP 0344
TOLERANCING PRINCIPLE ISO8015
GENERAL TOLERANCES ACCORDING TO ISO2768-mK

DD - DIMENSIONAL DRAWING - Confidential

Approved

Download "DXF file"

Copyright Winterthur Gas & Diesel Ltd. All rights reserved. By taking possession of the drawing the recipient recognizes and honours these rights. Neither the whole nor any part of this drawing may be used in any way for construction, fabrication, marketing or any other purpose nor copied in any way nor made accessible to third parties without the previous written consent of Winterthur Gas & Diesel Ltd.

Kolbenausbau
PISTON DISMANTLING

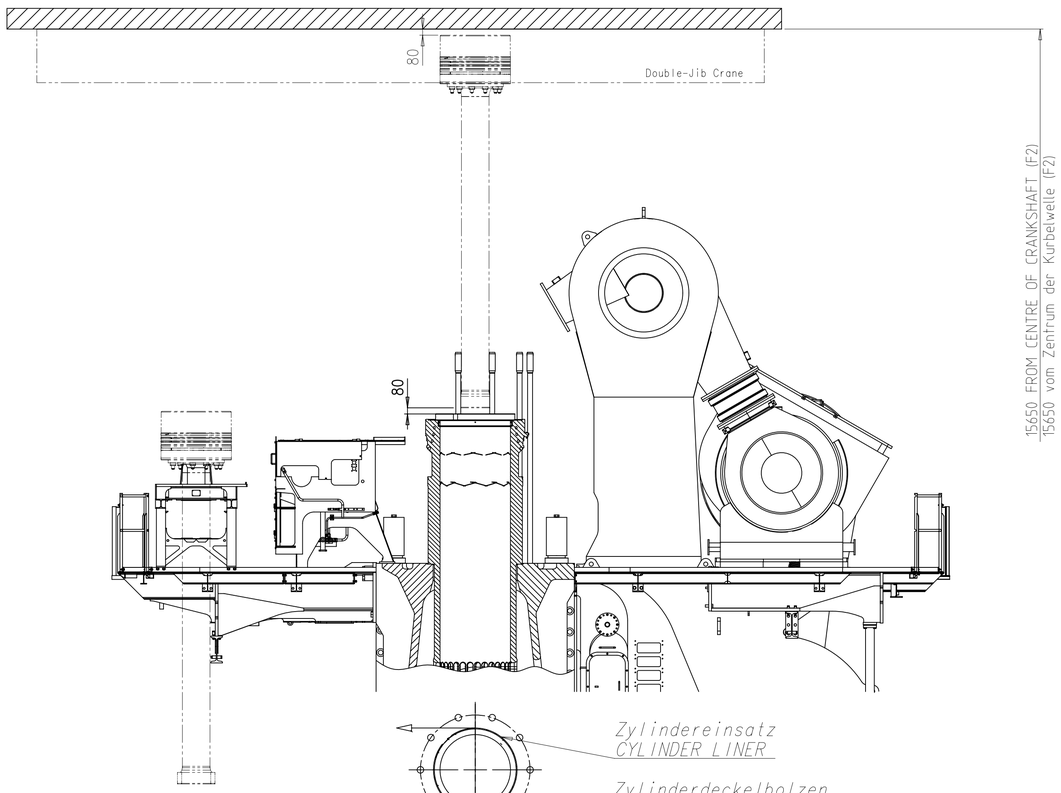

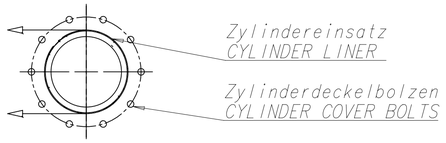

Zuganker zweiteilig
TWO-PART TIE ROD

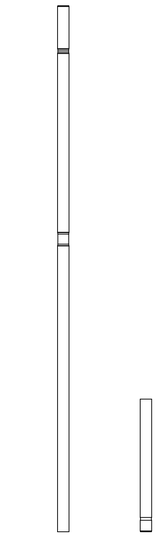

A

DOUBLE-JIB CRANE

Krankapazität min. 2x7000 kg
CRANE CAPACITY MIN. 2x7000 kg (A)

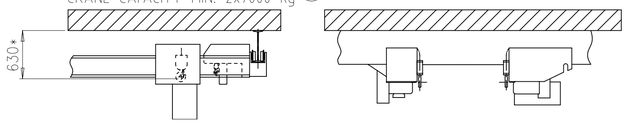

A

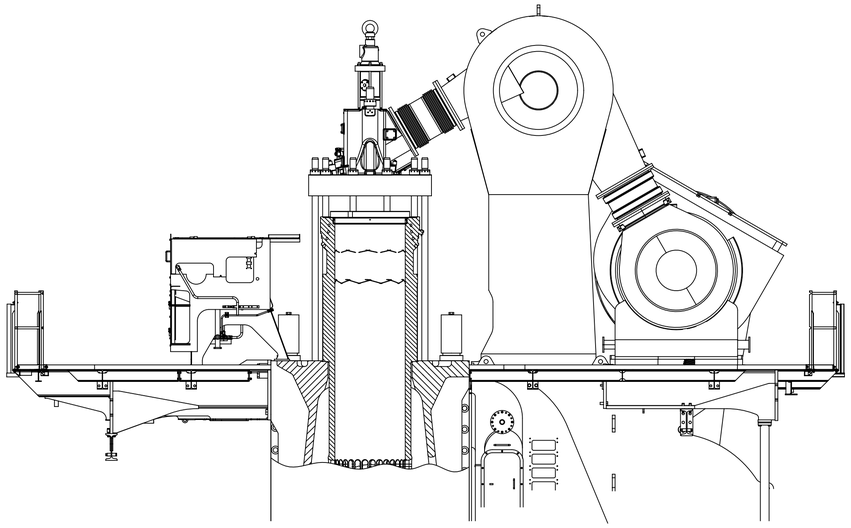

Ausbau Zylindereinsatz
DISMANTLING OF CYLINDER LINER

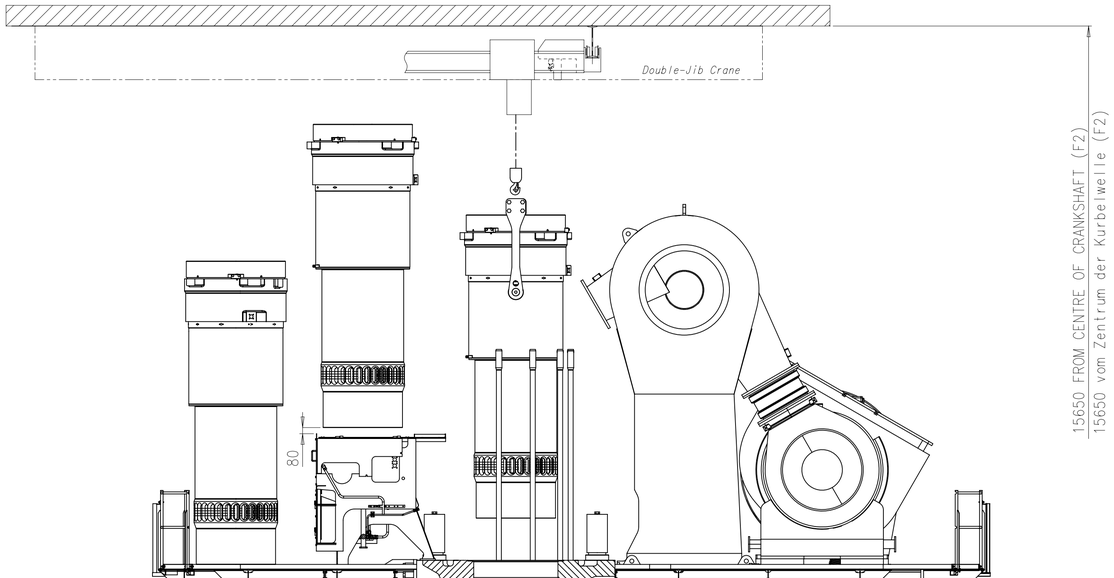

Voraussetzungen fuer diese Ausbauart!

- alle Zylinderdeckel-Dehnbolzen auf der Brennstoffpumpenseite müssen zweiteilig ausgefuehrt werden
- zweiteilige Zuganker im Reparaturfall
- Spezialkran (Double-JIB)
- spezielle Hebewerkzeuge für den Kolben
- spezielle Hebewerkzeuge für den Zylindereinsatz

REQUIREMENTS FOR THIS DISMANTLING METHOD!

- TWO-PIECE ELASTIC STUDS FOR CYLINDER COVER ON FUEL PUMP SIDE
- TWO-PART TIE ROD IN CASE OF REPAIR
- SPECIAL CRANE (DOUBLE-JIB)
- SPECIAL LIFTING TOOLS FOR PISTON
- SPECIAL LIFTING TOOLS FOR CYLINDER LINER

Standardausbau mit Double-Jib Kran

Minimale Höhe für den vertikalen Ausbau mit dem Double-Jib Kran

*Die Distanz von der obersten Hakenposition bis zur Decke variiert je nach der ausgewählten Kranausfuehrung

STANDARD DISMANTLING WITH DOUBLE-JIB CRANE

MIN. HEIGHT FOR VERTICAL REMOVAL WITH DOUBLE-JIB CRANE: F2

*DISTANCE BETWEEN TOP POSITION OF HOOK AND ENGINE ROOM CEILING VARIES DEPENDING ON CRANE TYPE.

FOR TILTED REMOVAL WITH DOUBLE JIB E/R CRANE BY FUCKS FOERDERTECHNIK AG

Free space for lic.									Q-Code XXXXX		Main Drw.
									Standard ISO; JIS		
Modif.	A	EAAD091495	23.06.2020	B	EAAD094796	24.09.2020					
		Number	Drawn date		Number	Drawn date		Number	Drawn date	Number	Drawn date

WIN GD Winterthur Gas & Diesel

Product: W-X92-B

DISMANTLING DIMENSIONS

Ausbaumasse

Units mm kg	NX		Basic Material				Net Weight 0,001
Made	02.05.2019	Nagappa Mullur	Scale 1:40	Size A1	Page 2/3	Material ID PAAD326456	
Chkd	08.05.2019	sth017 Thalmann	Design Group 0812	Drawing ID DAAD115618			Rev. B
Appd	08.05.2019	mda006 Dacic					

SURFACE PROTECTION SEE GROUP 0344
TOLERANCING PRINCIPLE ISO8015
GENERAL TOLERANCES ACCORDING TO ISO2768-mK

Approved

DIMENSIONAL DRAWING - Confidential

Copyright Winterthur Gas & Diesel Ltd All rights reserved By taking possession of the drawing the recipient recognizes and honours these rights Neither the whole nor any part of this drawing may be used in any way for construction, fabrication, marketing or any other purpose nor copied in any way nor made accessible to third parties without the previous written consent of Winterthur Gas & Diesel Ltd

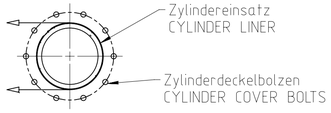

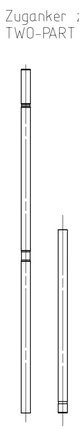

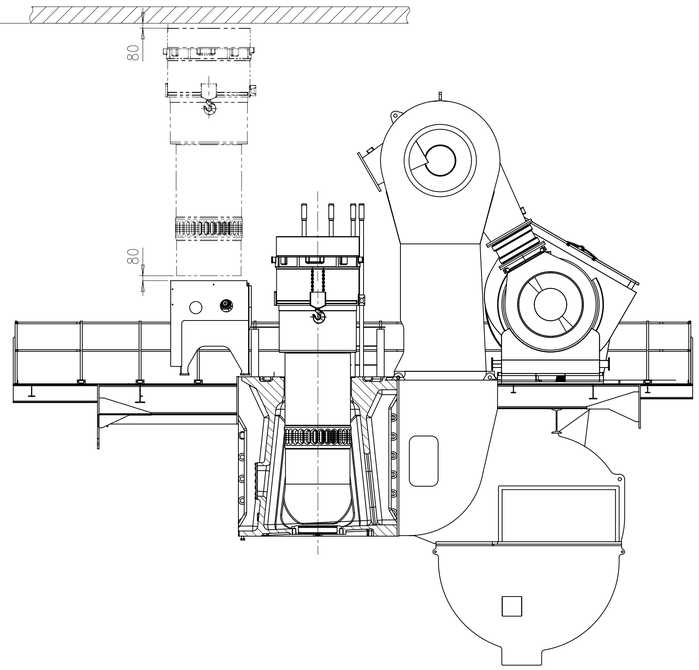

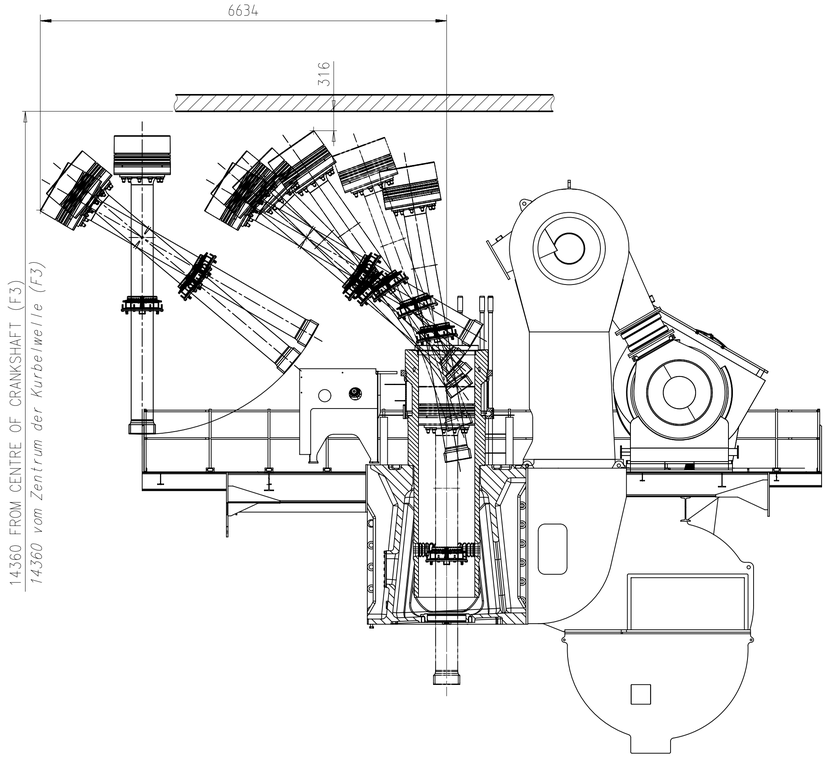

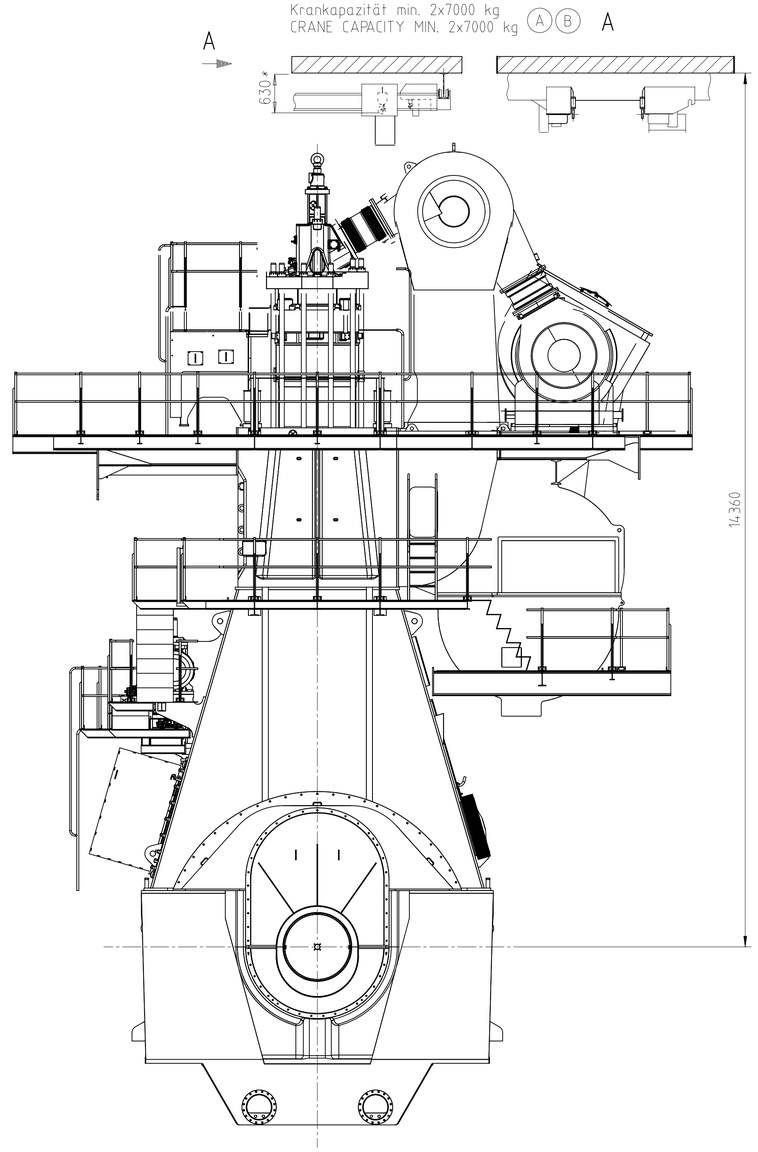

Voraussetzungen fuer diese Ausbauart!

- zweiteilige Zylinderdeckel-Dehnbolzen auf der Brennstoffpumpenseite
- zweiteilige Zuganker im Reparaturfall
- Spezialkran (DOUBLE-JIB)
- spezielle Hebewerkzeuge für den Zylindereinsatz und den Kolben
- damit der Zylindereinsatz ausgebaut werden kann, müssen die benachbarten Zylinderdeckel demontiert werden.

REQUIREMENTS FOR THIS DISMANTLING METHOD!

- TWO-PIECE ELASTIC STUDS FOR CYLINDER COVER ON FUEL PUMP SIDE
- TWO-PART TIE ROD IN CASE OF REPAIR
- SPECIAL CRANE (DOUBLE-JIB)
- SPECIAL LIFTING TOOLS FOR CYLINDER LINER AND PISTON
- FOR CYLINDER LINER DISMANTLING THE NEIGHBOURING CYLINDER COVERS NEED TO BE REMOVED, TOO

Standardausbau mit Double-Jib Kran

Minimale Hoehe fuer den gekippten Ausbau mit dem Double-Jib Kran: F3
*Die Distanz von der obersten Hakenposition bis zur Decke variiert je nach der ausgewaehlten Kranausfuehrung

Für gekippten Ausbau mit Double-Jib E/R Kran von Fuchs Foerdertechnik AG

STANDARD DISMANTLING WITH DOUBLE-JIB CRANE

MIN. HEIGHT FOR VERTICAL REMOVAL WITH DOUBLE-JIB CRANE: F3

*DISTANCE BETWEEN TOP POSITION OF HOOK AND ENGINE ROOM CEILING VARIES DEPENDING ON CRANE TYPE.

FOR TILTED REMOVAL WITH DOUBLE-JIB E/R CRANE BY FUCHS FOEDERTECHNIK AG

Free space for lic.								Q-Code XXXXX	Main Drw.
								Standard ISO; JIS	
Modif.	A EAAD091495	23.06.2020	B EAAD094796	24.09.2020					
	Number	Drawn date	Number	Drawn date	Number	Drawn date	Number	Drawn date	

WIN GD Winterthur Gas & Diesel

Product W-X92-B

DISMANTLING DIMENSIONS

Ausbaumasse

Units mm kg	NX	Basic Material					Net Weight 0,001
Made	02.05.2019 Nagappa Mullur	Scale 1:40	Size A1	Page 3/3	Material ID PAAD326456		
Chkd	08.05.2019 sth017 Thalmann	Design Group 0812	Drawing ID DAAD115618			Rev. B	
Appd	08.05.2019 mda006 Dacic						

SURFACE PROTECTION SEE GROUP 0344
TOLERANCING PRINCIPLE ISO8015
GENERAL TOLERANCES ACCORDING TO ISO2768-mK

Approved

DIMENSIONAL DRAWING - Confidential

Copyright Winterthur Gas & Diesel Ltd. All rights reserved. By taking possession of the drawing the recipient recognizes and honours these rights. Neither the whole nor any part of this drawing may be used in any way for construction, fabrication, marketing or any other purpose nor copied in any way nor made accessible to third parties without the previous written consent of Winterthur Gas & Diesel Ltd.

WinGD-9X92-B _Engine Outline Views

TRACK CHANGES

DATE	SUBJECT	DESCRIPTION
2021-05-17	DRAWING SET	First web upload
2021-06-23	PTAA000502	New engine outline view drawing for Turbocharger type 2xMET 83MB has been added.
2021-09-15	PTAA008473	New engine outline view drawing for Turbocharger type 3xA175-L has been added.
2021-12-02	PAAD379675	Revised engine outline view drawing for Turbocharger type 2xA280-L has been updated.
2022-03-16	PTAA008473	Revised engine outline view drawing for Turbocharger type 3xA175-L has been added.

DISCLAIMER

© Copyright by Winterthur Gas & Diesel Ltd.
All rights reserved. No part of this document may be reproduced or copied in any form or by any means (electronic, mechanical, graphic, photocopying, recording, taping or other information retrieval systems) without the prior written permission of the copyright owner.

THIS PUBLICATION IS DESIGNED TO PROVIDE AN ACCURATE AND AUTHORITATIVE INFORMATION WITH REGARD TO THE SUBJECT-MATTER COVERED AS WAS AVAILABLE AT THE TIME OF PRINTING. HOWEVER, THE PUBLICATION DEALS WITH COMPLICATED TECHNICAL MATTERS SUITED ONLY FOR SPECIALISTS IN THE AREA, AND THE DESIGN OF THE SUBJECT-PRODUCTS IS SUBJECT TO REGULAR IMPROVEMENTS, MODIFICATIONS AND CHANGES. CONSEQUENTLY, THE PUBLISHER AND COPYRIGHT OWNER OF THIS PUBLICATION CAN NOT ACCEPT ANY RESPONSIBILITY OR LIABILITY FOR ANY EVENTUAL ERRORS OR OMISSIONS IN THIS BOOKLET OR FOR DISCREPANCIES ARISING FROM THE FEATURES OF ANY ACTUAL ITEM IN THE RESPECTIVE PRODUCT BEING DIFFERENT FROM THOSE SHOWN IN THIS PUBLICATION. THE PUBLISHER AND COPYRIGHT OWNER SHALL UNDER NO CIRCUMSTANCES BE HELD LIABLE FOR ANY FINANCIAL CONSEQUENTIAL DAMAGES OR OTHER LOSS, OR ANY OTHER DAMAGE OR INJURY, SUFFERED BY ANY PARTY MAKING USE OF THIS PUBLICATION OR THE INFORMATION CONTAINED HEREIN.