Download "DXF file"

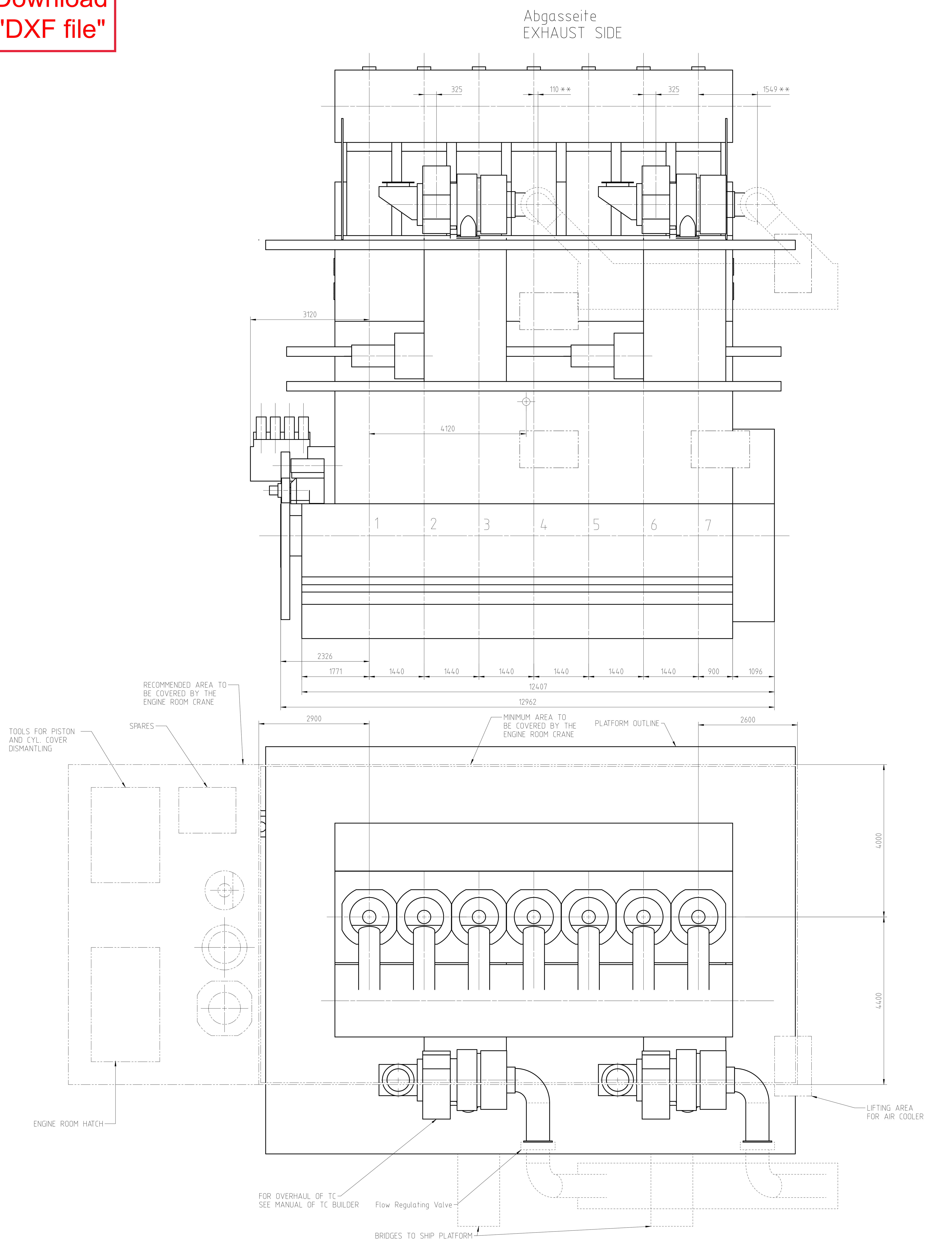

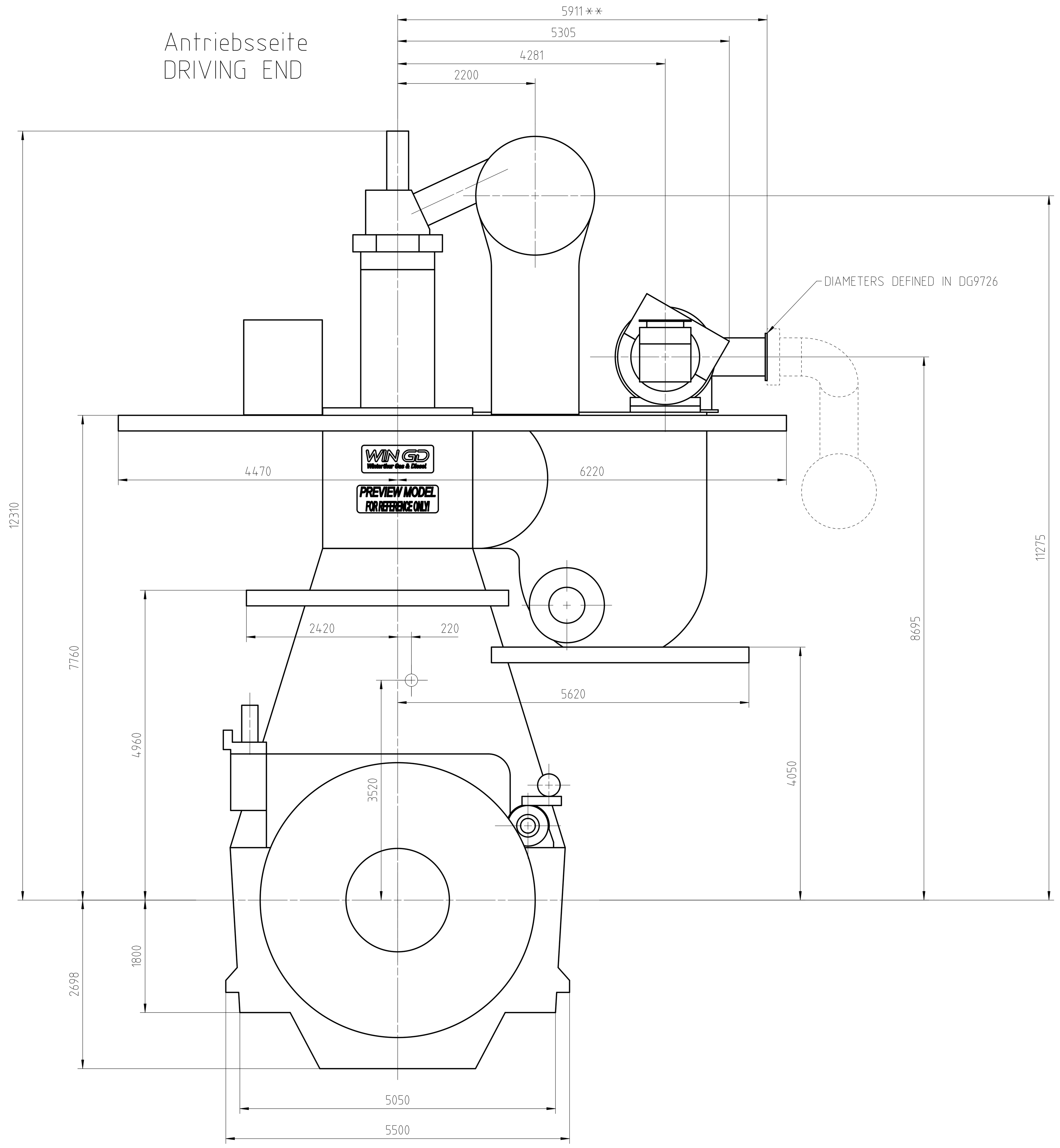

⌖ = APPROX. CENTRE OF GRAVITY

WEIGHT WITHOUT WATER AND OIL = 903 t

** ONLY FOR PROPOSAL

TURBOCHARGER 2x A175-L

DIMENSIONS FOR REFERENCE ONLY!
THIS OUTLINE DRAWING CAN NOT
BE USED FOR FINAL DESIGN !
PLEASE TAKE THE CORRESPONDING
DESIGN GROUP!

Prod.	7X82DF-2.0						
Rev.	Creator	Approver	Approval Date	Change ID	Change Synopsis	Activity Code E	Activity Code C
A	wta101	sth017	11.11.2021	CNAA000932	ICER Updated	4	3
-	wta101	sth017	17.08.2021	CNAA000504	main drawing introduced	-	-

Approved

WIN GD Winterthur Gas & Diesel

ENGINE OUTLINE VIEW

ICER

Dimension			
Scale 1:40	NX	Units [mm] [kg]	Basic Material
Net Weight	0.001	Main Design	Yes
Design Group	0812	Q-Code	XXXXX
Standard	WDS	Qty per	Engine
A0	Item ID	PTAA010495	Drawing Page/s 1/1

SURFACE PROTECTION SEE GROUP 0344
TOLERANCING PRINCIPLE ISO8015
GENERAL TOLERANCES ACCORDING TO ISO2768-mK

Copyright Winterthur Gas & Diesel Ltd. All rights reserved. By taking possession of the drawing the recipient recognizes and honours these rights. Neither the whole nor any part of this drawing may be used in any way for construction, fabrication, marketing or any other purpose nor copied in any way nor made accessible to third parties without the previous written consent of Winterthur Gas & Diesel Ltd.

Download
"DXF file"

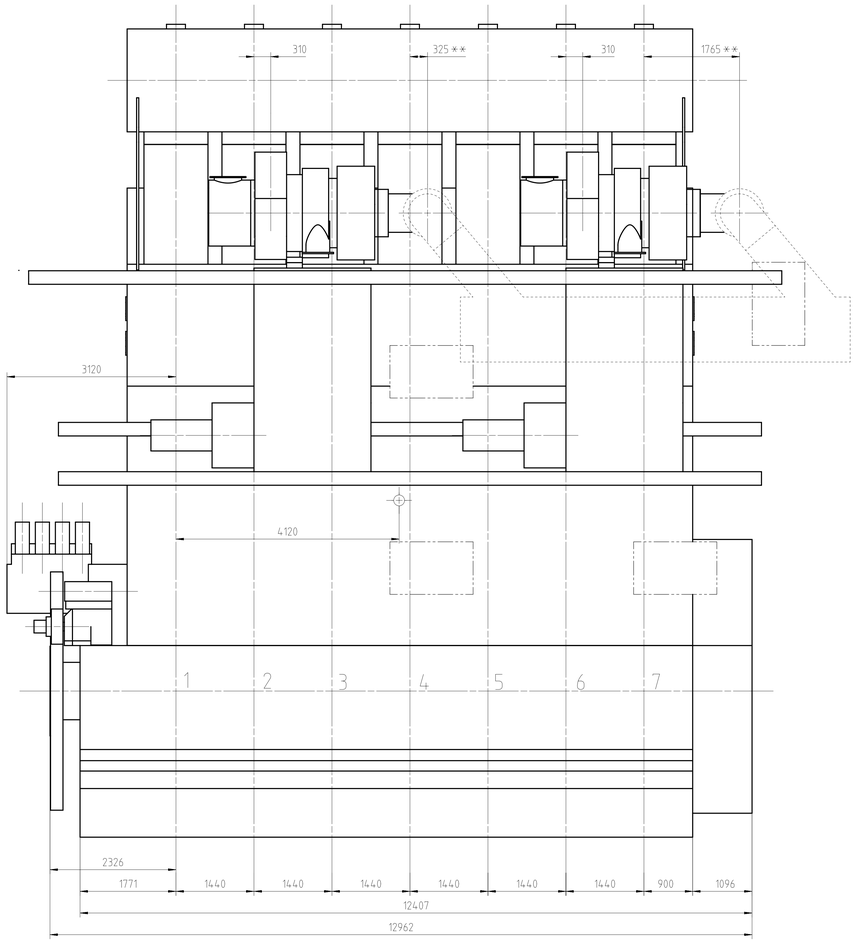

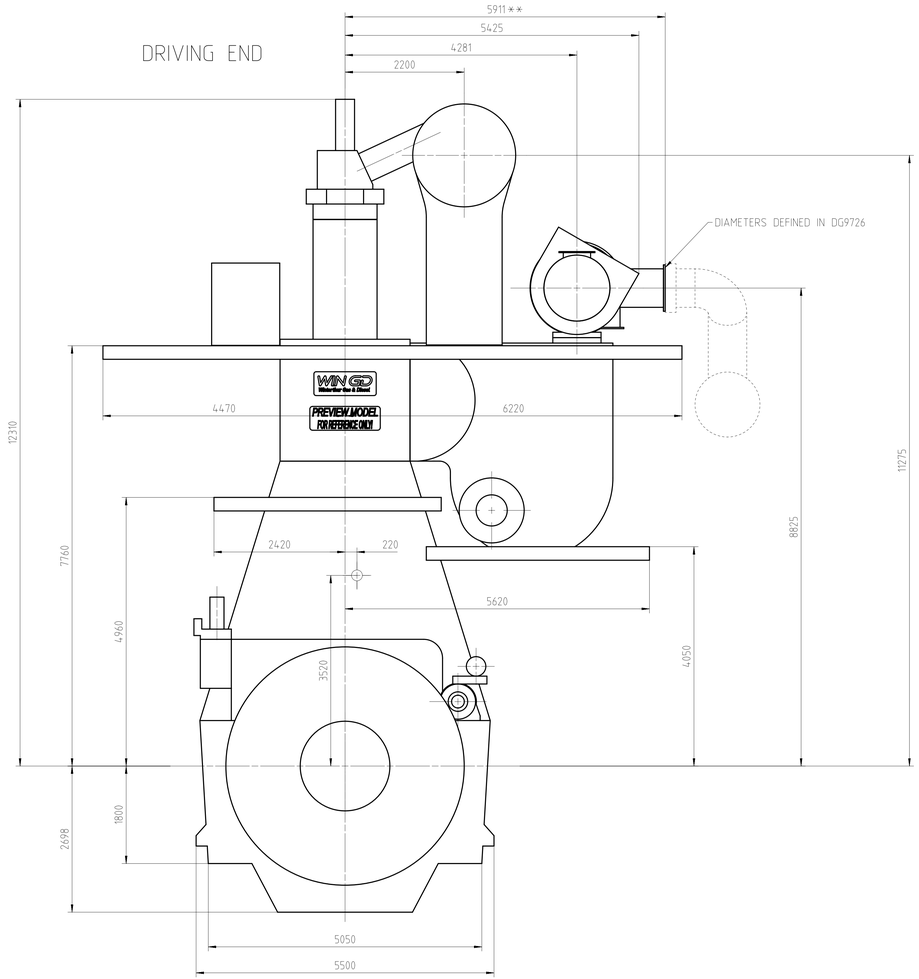

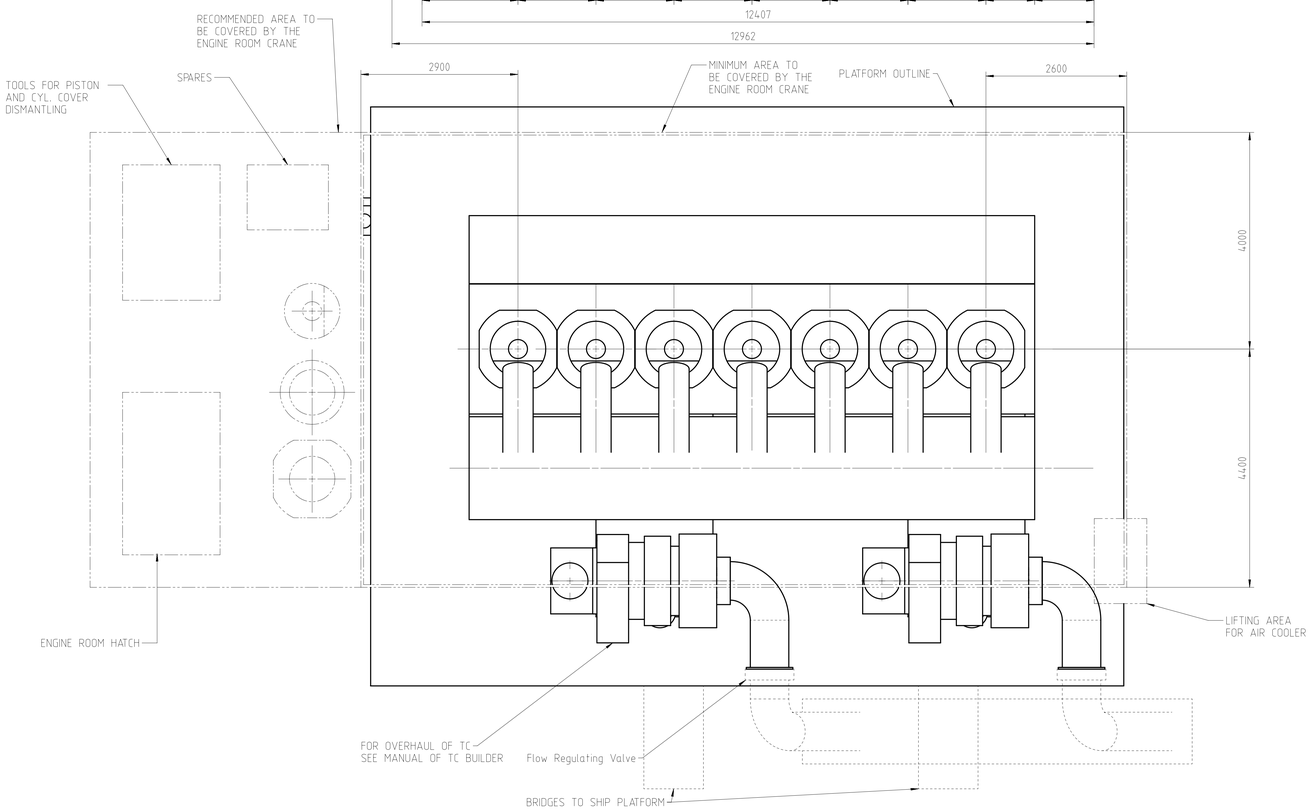

⊕ = APPROX. CENTRE OF GRAVITY

WEIGHT WITHOUT WATER AND OIL = 903 t

** ONLY FOR PROPOSAL

TURBOCHARGER 2x MET66

DIMENSIONS FOR REFERENCE ONLY!
THIS OUTLINE DRAWING CAN NOT
BE USED FOR FINAL DESIGN !
PLEASE TAKE THE CORRESPONDING
DESIGN GROUP!

Prod.	7X82DF-2.0						
Change History							
-	wta101	sth017	22.11.2022	CNA4002815	Main Design/Drawing Introduced	-	-
Rev.	Creator	Approver	Approval Date	Change ID	Change Synopsis	Activity Code	E / C

Approved

WIN GD Winterthur Gas & Diesel

ENGINE OUTLINE VIEW
ICER

Dimension

Scale 1:40 | NX | Units [mm] [kg] | Basic Material | Net Weight 0.001

SURFACE PROTECTION SEE GROUP 0344
TOLERANCING PRINCIPLE ISO8015
GENERAL TOLERANCES ACCORDING TO ISO2768-mK

Copyright Winterthur Gas & Diesel Ltd. All rights reserved. This document is the property of Winterthur Gas & Diesel and honours these rights. Neither the whole nor any part of this drawing may be used in any way for construction, fabrication, marketing or any other purpose nor copied in any way nor made accessible to third parties without the previous written consent of Winterthur Gas & Diesel Ltd.

Main Design	Yes	Design Group	0812	Q-Code XXXXX	Standard	WDS
Qty per	Engine	A0	Item ID	PTAA049050	Drawing Pages	1/1

WinGD – 7X82DF – 2.0_Engine-Outline-Views

TRACK CHANGES

DATE	SUBJECT	DESCRIPTION
2021-10-12	DRAWING SET	First web upload
2021-12-02	PTAA010495	Revised Engine outline view drawing for Turbocharger type 2xA175-L has been added.
2022-11.29	PTAA049050	New Engine outline view drawing for Turbocharger type 2xMET-66MB has been added.

DISCLAIMER

© Copyright by Winterthur Gas & Diesel Ltd.
All rights reserved. No part of this document may be reproduced or copied in any form or by any means (electronic, mechanical, graphic, photocopying, recording, taping or other information retrieval systems) without the prior written permission of the copyright owner.

THIS PUBLICATION IS DESIGNED TO PROVIDE AN ACCURATE AND AUTHORITATIVE INFORMATION WITH REGARD TO THE SUBJECT-MATTER COVERED AS WAS AVAILABLE AT THE TIME OF PRINTING. HOWEVER, THE PUBLICATION DEALS WITH COMPLICATED TECHNICAL MATTERS SUITED ONLY FOR SPECIALISTS IN THE AREA, AND THE DESIGN OF THE SUBJECT-PRODUCTS IS SUBJECT TO REGULAR IMPROVEMENTS, MODIFICATIONS AND CHANGES. CONSEQUENTLY, THE PUBLISHER AND COPYRIGHT OWNER OF THIS PUBLICATION CAN NOT ACCEPT ANY RESPONSIBILITY OR LIABILITY FOR ANY EVENTUAL ERRORS OR OMISSIONS IN THIS BOOKLET OR FOR DISCREPANCIES ARISING FROM THE FEATURES OF ANY ACTUAL ITEM IN THE RESPECTIVE PRODUCT BEING DIFFERENT FROM THOSE SHOWN IN THIS PUBLICATION. THE PUBLISHER AND COPYRIGHT OWNER SHALL UNDER NO CIRCUMSTANCES BE HELD LIABLE FOR ANY FINANCIAL CONSEQUENTIAL DAMAGES OR OTHER LOSS, OR ANY OTHER DAMAGE OR INJURY, SUFFERED BY ANY PARTY MAKING USE OF THIS PUBLICATION OR THE INFORMATION CONTAINED HEREIN.