NetWeight						
0,001						
1	001	PAAD294638	LEAKAGE COLLECTION/WASHING SYS.	DAAD100391		0,001
Quantity PER ENGINE	SEQ NO	Material ID	Material Name / Dimension, Occ	Standard or Drawing	Basic Material / Material Standard	Weight GR./NET

MaterialID	Free space for lic.	Q-Code	Main Drw.
PAAD294706		XXXX	H
		Standard: ISO; JIS	

Modif.	Number	Drawn date	Number	Drawn date	Number	Drawn date	Number	Drawn date

WIN GD
Winterthur Gas & Diesel

Product: W5-8X72-B

LEAKAGE COLLECTION/WASHING SYS.
SYSTEM DIAGRAM
LEAKAGE COLLECTION/WASHING SYS.

Units mm kg	NX	Basic Material	Net Weight

SURFACE PROTECTION SEE GROUP 0344
TOLERANCING PRINCIPLE ISO8015
GENERAL TOLERANCES ACCORDING TO ISO2768-mK

Made	09.05.2018 Arindam	Scale –	Size A3	Page 1/1	Material ID
Chkd	19.07.2018 wwa008 Wang	Design Group 9724	Drawing ID DAAD100412		Rev. –
Appd	27.07.2018 mhu019 Hug				

Approved

DID - DIMENSIONAL DRAWING - Confidential

SPECIFICATION which must be met

41	OUTLET - Venting crankcase - Venting to funnel - Must not be connected to other venting pipes.
43	OUTLET - Venting turbocharger - Venting to funnel - Minimum inclination according to TC suppliers specification - Must be not connected to other venting pipes.
57	OUTLET - Various leakages - Gravity flow to sludge tank or appropriate tank.

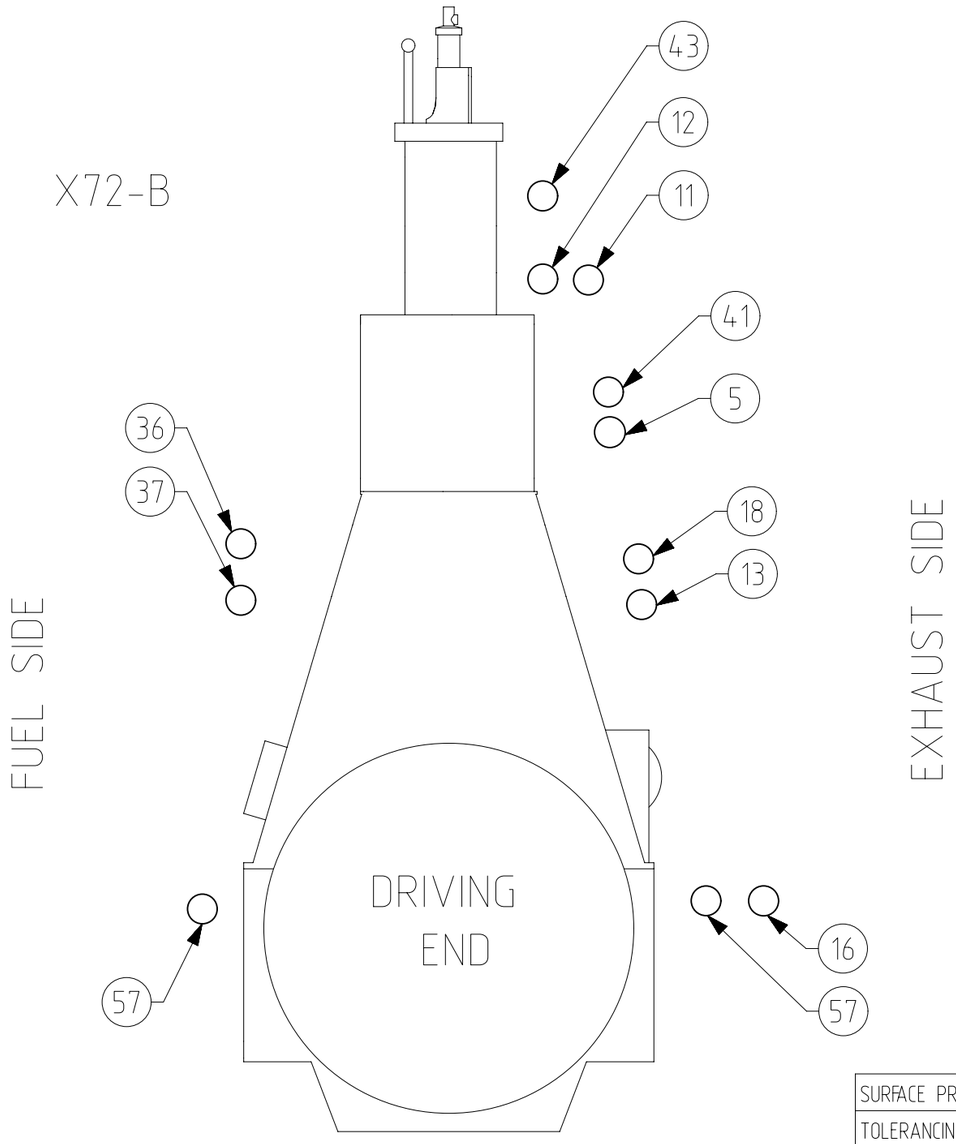

5	OUTLET - Cylinder cooling water drain. - Gravity flow to cooling water drain tank or appropriate tank.
11	INLET - Washing water SAC - From fresh water hydrophore system, supply pressure: 2.5 bar
12	INLET - Air for cleaning plants TC and SAC - Working air, supply pressure: 7-9 bar
13	OUTLET - Oily water from scavenge air receiver - Gravity flow to oily water tank or appropriate tank.
16	OUTLET - SAC condensate water - Gravity flow to bilge water tank or appropriate tank.
18	OUTLET - SAC venting - Free flow outside of engine room
36	OUTLET - Dirty oil piston underside - Flow with SAC pressure to sludge oil trap or appropriate arrangement. - Min. inclination of drain pipe off the horizontal line: 30°
37	OUTLET - Leakage oil gland box - Gravity flow to sludge tank or appropriate tank.

QTY	SEQ NO	Material ID	Material Name / Dimension, Occ	Standard or Drawing	Basic Material / Material Standard	Weight GR./NET
1	001	107.425.369.500	SLUDGE OIL TRAP	107.425.369		0,001

Free space for lic.

Q-Code: XXXXX

Standard: ISO; JIS

Main Drw.

Modif. | Number | Drawn date | Number | Drawn date | Number | Drawn date | Number | Drawn date

WIN GD Winterthur Gas & Diesel

Product: 5-8X72-B

LEAKAGE COLLECTION/WASHING SYS.

LEAKAGE COLLECTION/WASHING SYS.

Units: mm kg | NX | Basic Material | Net Weight 0,001

SURFACE PROTECTION SEE GROUP 0344

TOLERANCING PRINCIPLE ISO8015

GENERAL TOLERANCES ACCORDING TO ISO2768-mK

Made	08.05.2018	Arindam	
Chkd	19.07.2018	wwa008	Wang
Appd	27.07.2018	mhu019	Hug

Scale: -

Design Group: 9724

Size: A3 | Page: 1/2 | Material ID: PAAD294638

Drawing ID: DAAD100391 | Rev.: -

Approved

DID - DIMENSIONAL DRAWING - Confidential

SYSTEM PROPOSAL

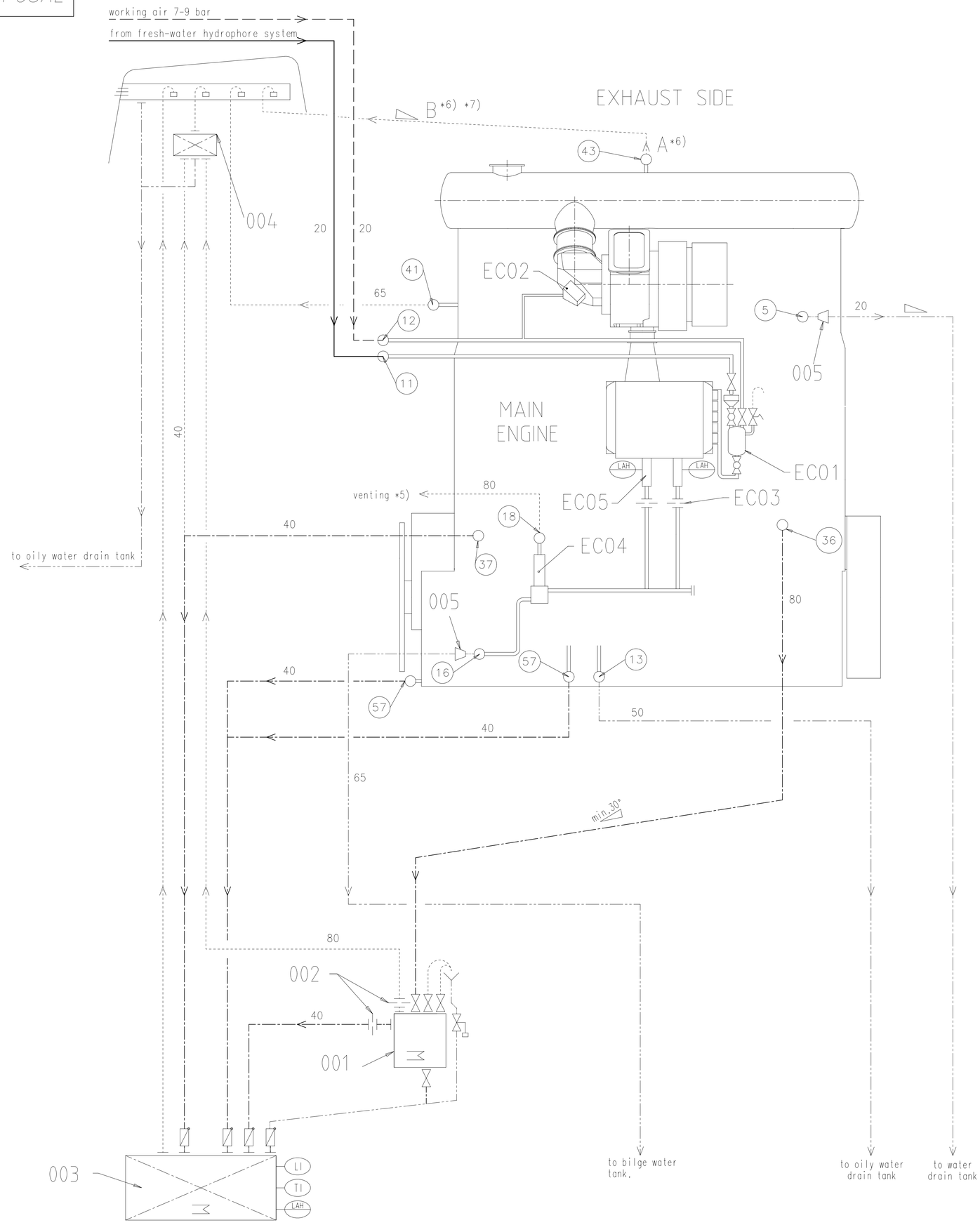

Turbocharger type	A*7)	B*8)	Min. Inclination
1x A165	50	65	≥ 5°
1x A265	50	65	≥ 5°
1x A170	65	65	≥ 5°
1x A270	65	65	≥ 5°
1x A175	65	65	≥ 5°
1x A275	65	65	≥ 5°
1x A180	80	80	≥ 5°
1x A280	80	80	≥ 5°
1x A185	80	80	≥ 5°
1x A285	80	80	≥ 5°
2x A165	50	80	≥ 5°
2x A170	65	90	≥ 5°
2x A175	65	100	≥ 5°
2x A180	80	100	≥ 5°
2x A185	80	125	≥ 5°
2x A190	80	125	≥ 5°
1x MET53MB	65	65	≥ 3°
1x MET60MB	80	80	≥ 3°
1x MET66MB	80	80	≥ 3°
1x MET71MB	80	80	≥ 3°
1x MET83MB	100	100	≥ 3°
2x MET53MB	65	80	≥ 3°
2x MET60MB	80	100	≥ 3°
2x MET66MB	80	100	≥ 3°

Pos.	SYSTEM COMPONENTS *1)
001	Sludge oil trap (according to separate drawing)
002	Throttling disc (size shown on separate sludge oil trap drawing)
003	Sludge or approriate tank
004	Air vent manifold
005	Transition piece (adaptor) *10)

Pos.	ENGINE CONNECTIONS *2)
5	OUTLET - Cylinder cooling water drain
11	INLET - Washing water SAC
12	INLET - Air for cleaning TC and SAC
13	OUTLET - Oily water from scavenge air receiver
16	OUTLET - SAC condensate water *4)
18	OUTLET - SAC venting *5)
36	OUTLET - Dirty oil piston underside
37	OUTLET - Leakage oil gland box
41	OUTLET - venting crankcase
43	OUTLET - Venting turbocharger
57	OUTLET - Various leakages

Pos.	ENGINE COMPONENTS *3)
EC01	Scavenge air cooler washing plant
EC02	Dry cleaning device
EC03	Throttling disc
EC04	Venting Unit
EC05	Condensate drain unit

Remarks

- Air vent and drain pipes must be fully functional at all inclination angles of the ship at which the engine must be operational.

*1) To be delivered by external suppliers and to be installed by the shipyard.

*2) Refer to the "Pipe Connection Plan" for the execution and location of the engine pipe connections.

*3) To be delivered by the engine manufacturer, i.e. already equipped on engine side

*4) The amount of condensate water drained off after the SAC depends on the relative air humidity and the scavenge air temperature before and after the SAC. Under extreme ambient conditions a maximum condensate quantity of up to 0.16 kg/kWh may be produced

*5) Free flow venting outside of engine room.

*6) In relation to turbocharger type, see table on the left side

*7) Vent pipe diameter as per turbocharger requirements.

*8) Vent pipe diameter of common collection pipe with single turbocharger arrangement.

*9) Vent pipe diameter of common collection pipe with arrangement of two turbbocharger.

*10) Installed as required (check with the Pipe Connection Plan).

Free space for lic.

Q-Code XXXXX
Standard ISO; JIS
Main Drw.

Modif. | Number | Drawn date | Number | Drawn date | Number | Drawn date | Number | Drawn date

WIN GD Winterthur Gas & Diesel

Product 5-8X72-B

LEAKAGE COLLECTION/WASHING SYS.

LEAKAGE COLLECTION/WASHING SYS.

Units mm kg | NX | Basic Material | Net Weight 0,001

SURFACE PROTECTION SEE GROUP 0344
TOLERANCING PRINCIPLE ISO8015
GENERAL TOLERANCES ACCORDING TO ISO2768-mK

Made 08.05.2018 Arindam
Chkd 19.07.2018 wwa008 Wang
Appd 27.07.2018 mhu019 Hug

Scale - | Design Group 9724 | Size A1 | Page 2/2 | Material ID PAAD294638 | Drawing ID DAAD100391 | Rev. -

Approved

Remarks:

*1) Orifice to be as shown

*2) Observe location of pipes with regard to each other

*3) Optional - Alternatives, such as level sensors, are possible

Details:

	L = 1000	L = 550
Cylinder bore size:	55-96	35-54
Capacity:	150 l	100 l
Working pressure:	4 bar	
Testing pressure:	6 bar	
Temperatur:	80°C	

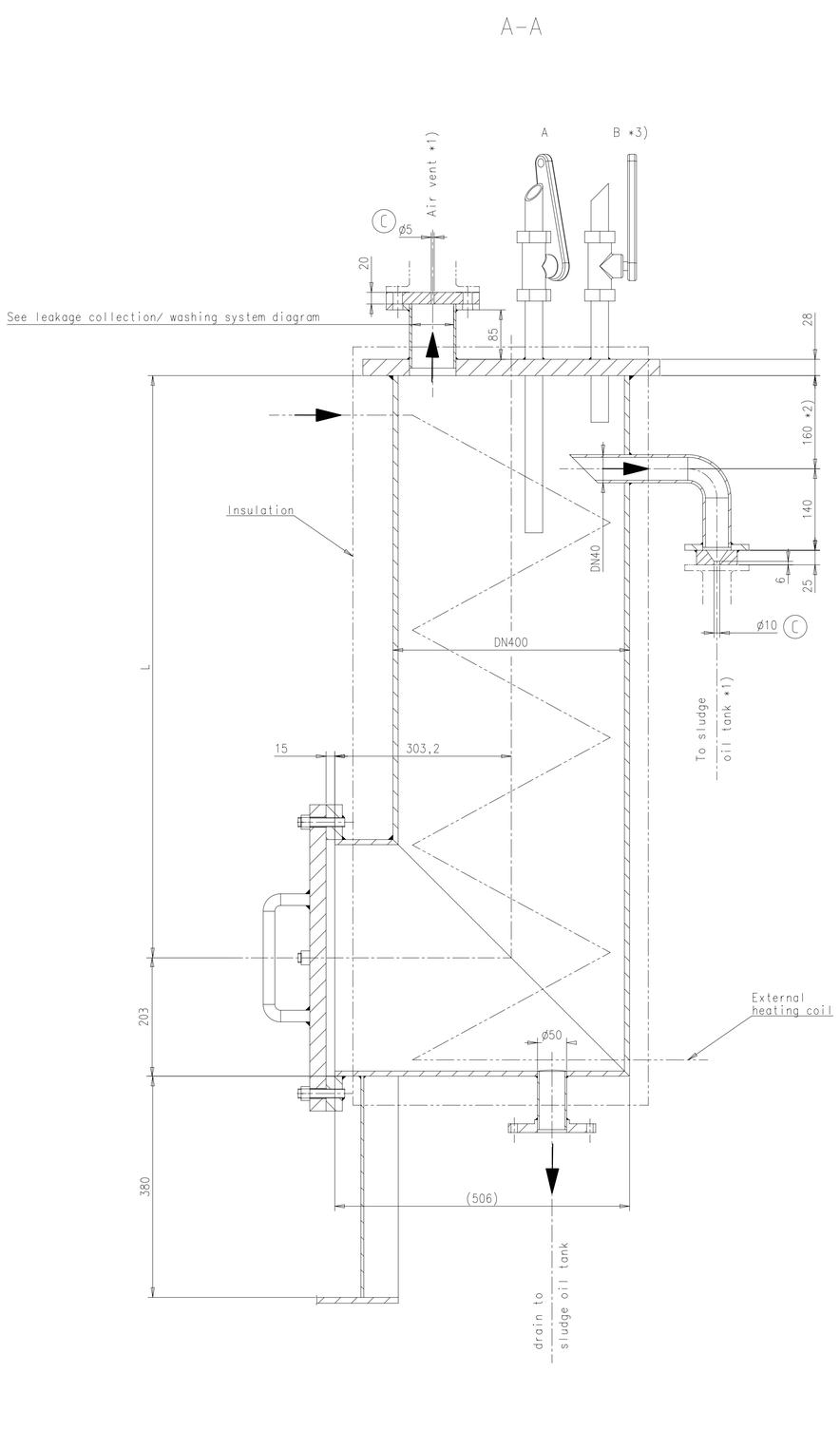

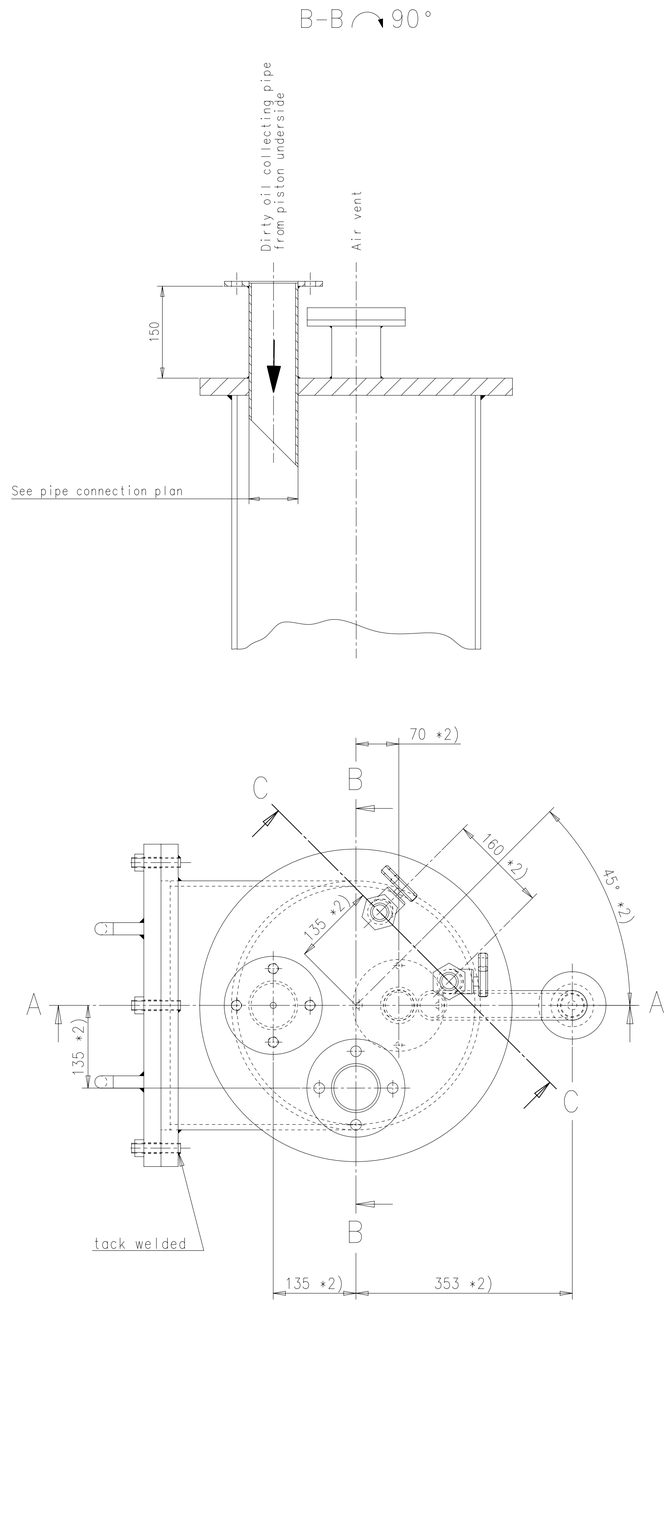

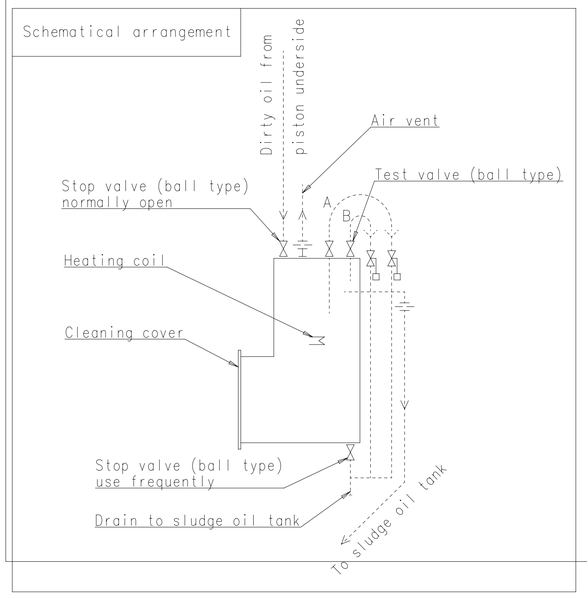

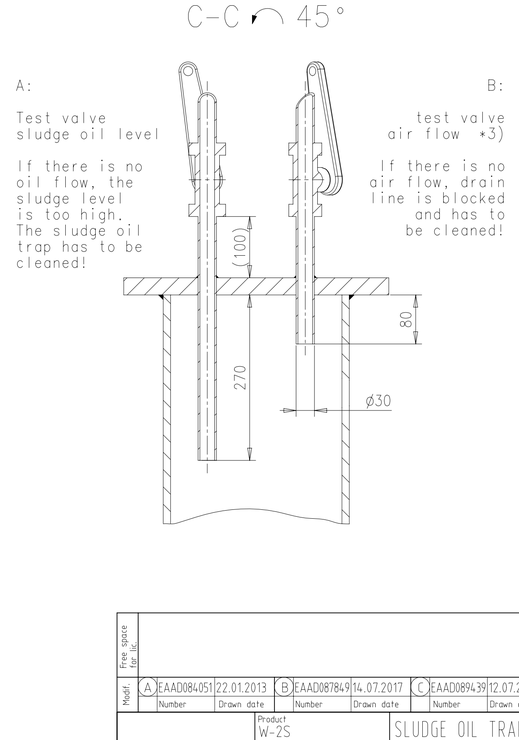

Free space for lic.								Q-Code XXXXX	Main Drw.
								Standard ISO; JIS	
Modif.	A	EAAD084051	22.01.2013	B	EAAD087849	14.07.2017	C	EAAD089439	12.07.2018
		Number	Drawn date		Number	Drawn date		Number	Drawn date

WIN GD Winterthur Gas & Diesel

Product W-2S

SLUDGE OIL TRAP

Units mm kg	NX	Basic Material			Net Weight 0.001
SURFACE PROTECTION SEE GROUP 0344	Made 31.08.2009 J.BAUMANN	Scale 1:5	Size A1	Page 1/1	Material ID 107.425.369.500
TOLERANCING PRINCIPLE ISO8015	Chkd	Design Group 9724	Drawing ID 107.425.369		Rev. C
GENERAL TOLERANCES ACCORDING TO ISO2768-mK	Appd 13.11.2009 JBA029 Baumann				

Approved

DD - DIMENSIONAL DRAWING - Confidential

WinGD-X72-B LEAKAGE-COLLECTION and WASHING-SYSTEM

TRACK CHANGES

DATE	SUBJECT	DESCRIPTION
2018-09-12	DRAWING SET	First web upload

Winterthur Gas & Diesel Ltd.
Winterthur Gas & Diesel AG.
Winterthur Gas & Diesel S.A.

Schützenstrasse 3
PO Box 414, CH-8401
Winterthur, Switzerland

Tel. +41 (0)52 264 8844
Fax +41 (0)52 264 8866