Download
"DXF file"

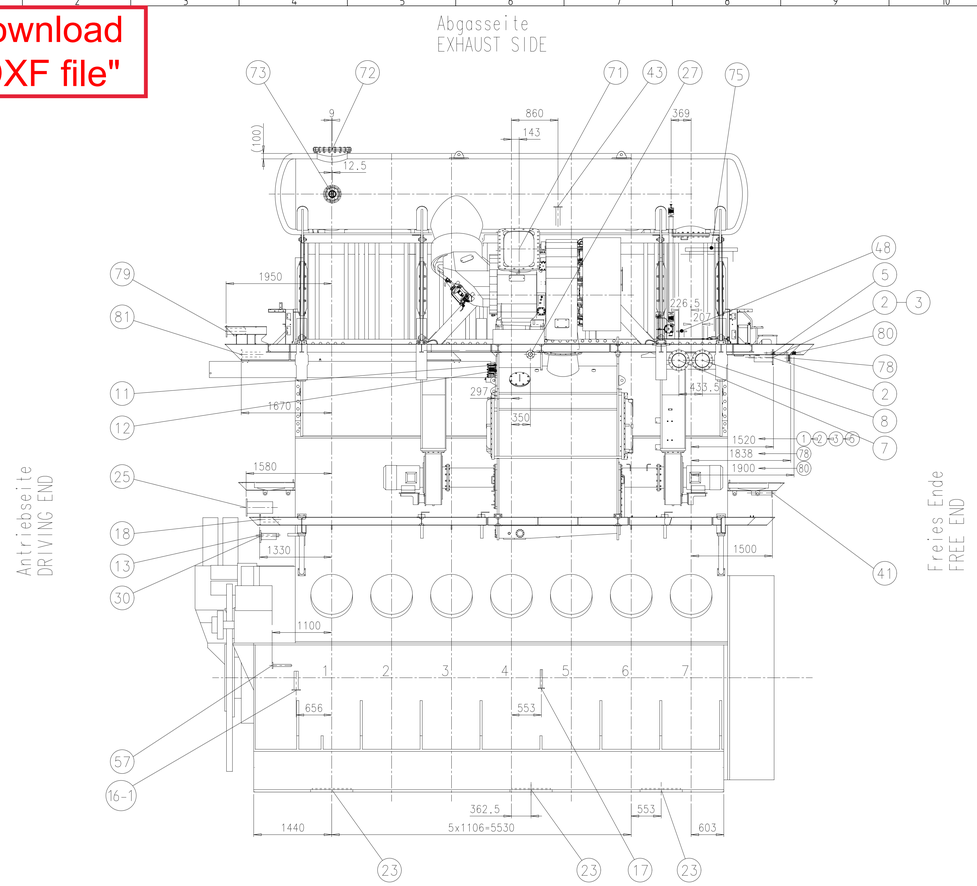

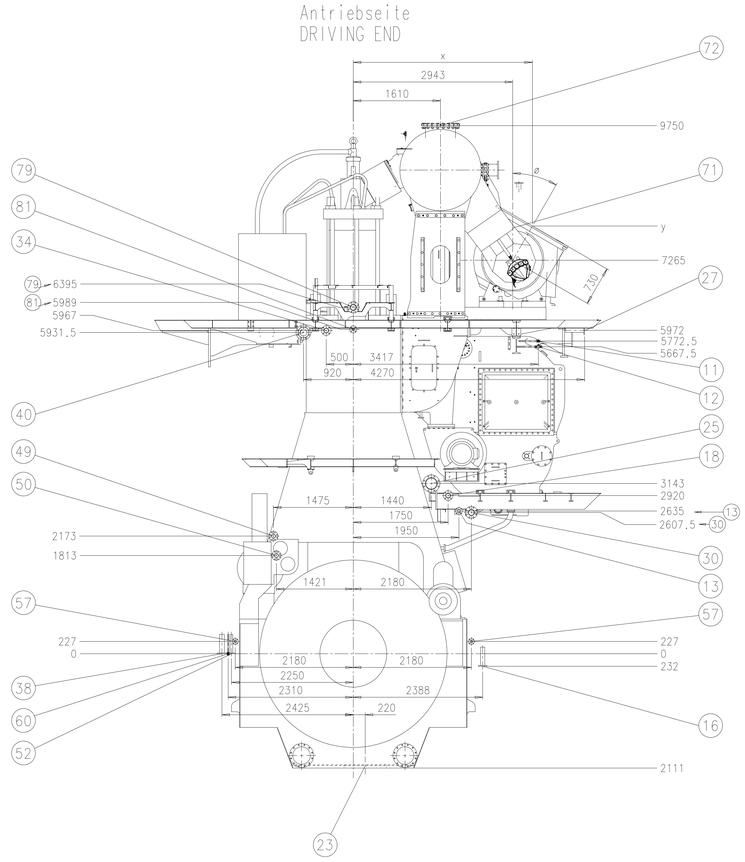

Gasaustritt-Stellung GAS OUTLET POSITION	x	y
0°	2943	7995
15°	3132	7970
30°	3308	7897
45°	3459	7781

*1) Optionale Ausfuehrung (wenn verlangt)
OPTIONAL EXECUTION (IF REQUIRED)

*2) Standard Ausfuehrung
STANDARD EXECUTION
Vorschlag: Endgueltige Position
ist mit Werft zu bestimmen
PROPOSAL: FINAL POSITION TO BE DETERMINED
IN ACCORDANCE WITH SHIPYARD

*3) Externe Ausfuehrung (wenn verlangt)
EXTERNAL EXECUTION (IF REQUIRED)

Alle Flanschanschluesse am Motor sind mit Gegenflanschen versehen (Blindflansch), ausgenommen der Anschluss fuer den Gasaustritt am Turbolader. Die Blindflansche sind nach dem betreffenden Rohrdurchmesser des Werftanschlusses aufzubohren.
THE PIPE CONNECTIONS ON THE ENGINE ARE SUPPLIED WITH MATING FLANGES (BLIND), WITH EXCEPTION OF THE TURBOCHARGER EXHAUST GAS OUTLET, BLIND FLANGES TO BE DRILLED TO MATCH PIPE DIA SUPPLIED BY THE SHIPYARD.

Die Gewinde-Anschluesse werden komplett geliefert
SCREWED CONNECTIONS ARE SUPPLIED COMPLETE

DIMENSIONS FOR REFERENCE ONLY. TECHNICAL MODIFICATIONS RESERVED.
LATER ADAPTIONS ARE POSSIBLE BASED ON PROJECT REQUIREMENTS AND RELATED DETAIL DESIGN.
THIS PIPE CONNECTION PLAN MAY NOT BE USED FOR FINAL DESIGN!

1x A275-L

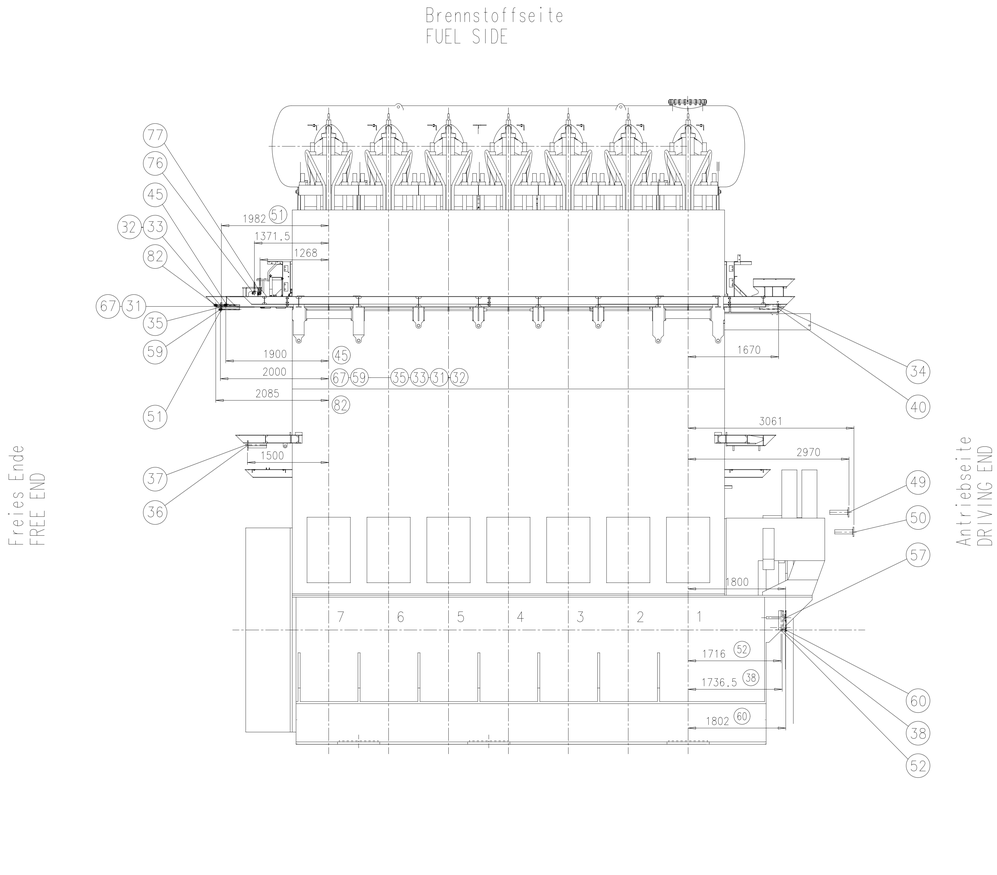

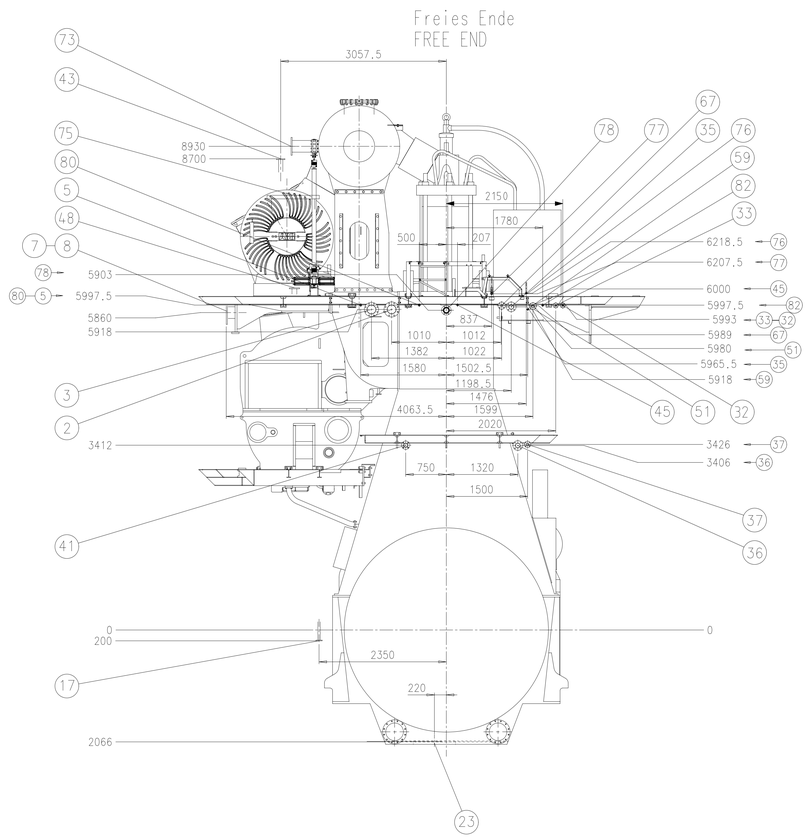

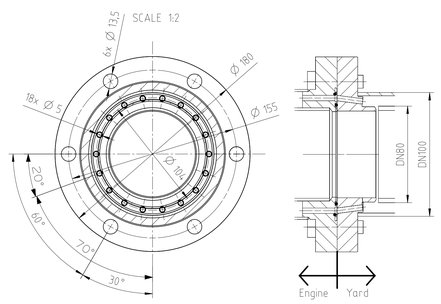

Anschlussprinzip siehe Stueckliste Pos. 002
CONNECTION PRINCIPLE SEE PARTLIST

DIMENSIONS FOR REFERENCE ONLY.
TECHNICAL MODIFICATIONS RESERVED.
LATER ADAPTIONS ARE POSSIBLE BASED ON
PROJECT REQUIREMENTS AND RELATED DETAIL DESIGN
THIS PIPE CONNECTION PLAN MAY NOT BE USED FOR
FINAL DESIGN!

Refweight	SEQ NO	Material ID	Material Name / Dimension, Occ	Standard or Drawing	Basic Material / Material Standard	Weight GR.NET
0,001						
1	002	PAAD147122	FLANGE DIMENSIONS	DAAD045822		0,01
1	001	107.390.729.500	FLANGE DIMENSIONS	107.390.729		0,001

Quantity PER ENGINE

PAAD374496 Material

Q-Code XXXXX
Standard ISO; JIS
Main Dw. H

Appl.	Number	Drawn date	Number	Drawn date	Number	Drawn date	Number	Drawn date

WIN GD Winterthur Gas & Diesel

Product 7X62DF-2.1 (STD)

PIPE CONNECTION PLAN
iCER-INTERFACE
Rohranschlussplan
iCER-interface

Units mm kg	NX	Basic Material			Net Weight
SURFACE PROTECTION SEE GROUP 0344	Made 08.02.2021 pje101 Jevremovic	Scale 1:40	Size A0	Page 1/2	Material ID
TOLERANCING PRINCIPLE ISO8015	Chkd 11.02.2021 ihe003 Herceg	Design Group 8020			
GENERAL TOLERANCES ACCORDING TO ISO2768-mK	Appd 11.02.2021 sth017 Thalmann	Drawing ID DAAD139933			Rev. –

Copyright Winterthur Gas & Diesel Ltd. All rights reserved. By taking possession of the drawing the recipient recognizes and honours these rights. Neither the whole nor any part of this drawing may be used in any way for construction, fabrication, marketing or any other purpose nor copied in any way nor made accessible to third parties without the previous written consent of Winterthur Gas & Diesel Ltd.

				Ko.Gr. KO.GR.	Leitungs-Anschluesse PIPE-CONNECTIONS: Freies Ende FREE END	Antriebseite DRIVING END	Abgasseite EXHAUST SIDE	Brennstoffseite FUEL SIDE
1		Zylinderkuehlwasser Eintritt CYLINDER COOLING WATER INLET	DN PN	8301	*Nicht benoetigt NOT USED*			
2		Zylinderkuehlwasser Eintritt CYLINDER COOLING WATER INLET	DN 200 PN 10	8305	X		X	
3		Zylinderkuehlwasser Austritt CYLINDER COOLING WATER OUTLET	DN 200 PN 5/6	8310	X		X	
4		Zylinderkuehlwasser Entlueftung Entlueftung CYLINDER COOLING WATER VENTING VENTING	DN PN	8310	*Nicht benoetigt NOT USED*			
5		Zylinderkuehlwasser Entleerung Austritt CYLINDER COOLING WATER DRAIN OUTLET	DN 20 PN 6	8313	X		X	
6		SLK Entleerung Austritt SAC DRAIN OUTLET	DN PN	8314	*Nicht benoetigt NOT USED*			
7		SLK-NT-Kuehlwasser Eintritt SAC-LT-COOLING WATER INLET	DN 250 PN 5/6	8335	X		X	
8		SLK-NT-Kuehlwasser Austritt SAC-LT-COOLING WATER OUTLET	DN 250 PN 5/6	8335	X		X	
9		SLK-HT-Kuehlwasser Eintritt SAC-HT-COOLING WATER INLET	DN PN	8335	*Nicht benoetigt NOT USED*			
10		SLK-HT-Kuehlwasser Austritt SAC-HT-COOLING WATER OUTLET	DN PN	8335	*Nicht benoetigt NOT USED*			
11		Wasser fuer Reinigungsanlage TL und SLK Eintritt WATER FOR CLEANING PLANT TC AND SAC INLET	DN 20 PN 16	8338		X	X	
12		Luft fuer Reinigungsanlage TL und SLK Eintritt AIR FOR CLEANING PLANT TC AND SAC INLET	DN 20 PN 16	8338		X	X	
13		Oeliges Wasser vom Receiver Austritt OILY WATER FROM RECEIVER OUTLET	DN 50 PN 5/6	8352		X	X	
14		Turbolader Schmutzwasser Austritt TURBOCHARGER DIRTY WATER OUTLET	DN PN	8355	*Nicht benoetigt NOT USED*			
15		Ablauf vom Wasserabscheider Austritt WATER DRAIN FROM WATERSEPERATOR OUTLET	DN PN	8356	*Nicht benoetigt NOT USED*			
16-1		SLK Kondenswasser (Abfall) Austritt SAC CONDENSATE WATER (WASTE) OUTLET	DN 65 PN 5/6	8357		X	X	
16-2		SLK Kondenswasser (Rekrutierung) Austritt SAC CONDENSATE WATER (RECIRCULATION) OUTLET	DN 65 PN 5/6	8357	*Nicht benoetigt NOT USED*			
17		SLK Waschwasser Austritt SAC WASHING WATER OUTLET	DN 32 PN 5/6	8357	X		X	
18		SLK Entlueftung Entlueftung SAC VENTING VENTING	DN 80 PN 5/6	8357		X	X	
19								
20								
21								
22 *1)	siehe Detail SEE DETAIL	Oelablauf Grundplatte Horizontal OIL DRAIN BEDPLATE HORIZONTAL		1110	*Nicht benoetigt NOT USED*			
23 *2)	siehe Detail SEE DETAIL	Oelablauf Grundplatte Vertikal OIL DRAIN BEDPLATE VERTICAL		1110 9722	X	X	X	
24		Zylinder Schmieroel Austritt CYLINDER LUB. OIL OUTLET	DN PN	8472	*Nicht benoetigt NOT USED*			

				Ko.Gr. KO.GR.	Leitungs-Anschluesse PIPE-CONNECTIONS: Freies Ende FREE END	Antriebseite DRIVING END	Abgasseite EXHAUST SIDE	Brennstoffseite FUEL SIDE
25		Hauptschmieroel Eintritt MAIN LUBRICATING OIL INLET	DN 200 PN 5/6	8406		X	X	
26 *3)		Schmieroel Turbolader Eintritt LUBRICATING OIL TURBOCHARGER INLET	DN PN	8430	*Nicht definiert NOT DEFINED*			
27		Schmieroel Turbolader Austritt LUBRICATING OIL TURBOCHARGER OUTLET	DN 65 PN 5/6	8431		X	X	
28		Spueloel Automatikfilter Austritt FLUSHING OIL AUTOMATIC FILTER OUTLET	DN PN	8445	*Nicht benoetigt NOT USED*			
29		Schmutzoel Ablauf Versorgungseinheit Austritt DIRTY OIL DRAIN SUPPLY UNIT OUTLET	DN PN	8452	*Nicht benoetigt NOT USED*			
30		Schmieroel Kreuzkopf Eintritt LUBRICATING OIL CROSSHEAD INLET	DN 100 PN 16	8455		X	X	
31		Leckagen vom Motor Austritt DIRTY OIL LEAKAGE FROM ENGINE OUTLET	DN PN	8463	*Nicht benoetigt NOT USED*			
32 *1)		Zylinder Schmieroel Eintritt (High BN) CYLINDER LUB. OIL INLET (High BN)	DN 25 PN 5	8475	X			X
33		Zylinder Schmieroel Eintritt (Low BN) CYLINDER LUB. OIL INLET (Low BN)	DN 25 PN 5	8475	X			X
34		Leckoel Antriebseite Austritt LEAKAGE OIL DRIVING END OUTLET	DN 80 PN 5/6	8482		X		X
35		Leckoel Freies Ende Austritt LEAKAGE OIL FREE END OUTLET	DN 80 PN 5/6	8483	X			X
36		Schmutzoel Kolbenunterseite Austritt DIRTY OIL PISTON UNDERSIDE OUTLET	DN 80 PN 5/6	8487	X			X
37		Leckoel Stopfbuechse Austritt LEAKAGE OIL GLAND BOX OUTLET	DN 40 PN 5/6	8488	X			X
38		Oelablaufltg. Versorgungseinheit Austritt OIL PIPE DRAIN SUPPLY UNIT OUTLET	DN 80 PN 5/6	8454		X		X
39		Leckageablauf Zylinderblock Austritt LEAKAGE DRAIN CYLINDER BLOCK OUTLET	DN PN	8462	*Nicht benoetigt NOT USED*			
40		Anlassluft Eintritt STARTING AIR PIPE INLET	DN 125 PN 40	8605		X		X
41		Entlueftung Kurbelgehaeuse Austritt VENTING CRANKCASE OUTLET	DN 65 PN 5/6	8608	X		X	
42		Entlueftung Waste Gate Austritt VENTING WASTE GATE OUTLET	DN PN	8609	*Nicht benoetigt NOT USED*			
43		Entlueftung Turbolader Austritt VENTING TURBOCHARGER OUTLET	DN 65 PN 5/6	8610	X		X	
44		Entlueftung Zylinderkuehlwasser Austritt VENTING CYLINDER COOLING WATER OUTLET	DN PN		*Nicht benoetigt NOT USED*			
45		Steuerluftversorgung Eintritt CONTROL AIR SUPPLY INLET	DN 15 PN 12	8630	X			X
46		Steuerluftversorgung Eintritt CONTROL AIR SUPPLY INLET	DN PN	4605	*Nicht benoetigt NOT USED*			
47								
48		iCER Luftspuehlleitung Austritt iCER PURGE AIR SUPPLY OUTLET	DN PN	86??	*Nicht definiert NOT DEFINED*			
49		Brennstoff Eintritt FUEL INLET	DN 65 PN 16	8702		X		X

				Ko.Gr. KO.GR.	Leitungs-Anschluesse PIPE-CONNECTIONS: Freies Ende FREE END	Antriebseite DRIVING END	Abgasseite EXHAUST SIDE	Brennstoffseite FUEL SIDE
50		Brennstoffruecklauf Austritt FUEL RETURN OUTLET	DN 65 PN 16	8704		X		X
51		Leckbrennstoff Rail Unit Austritt FUEL LEAKAGE RAIL UNIT OUTLET	DN 50 PN 5/6	8740	X			X
52		Leckbrennstoff Austritt FUEL LEAKAGE OUTLET	DN 40 PN 5	8744		X		X
53		Leckbrennstoff HD-Leitungen Austritt FUEL LEAKAGE HP-PIPES OUTLET	DN PN	8742	*Nicht benoetigt NOT USED*			
54		Leckbrennstoff Einspritzpumpe Austritt FUEL LEAKAGE INJECTION PUMP OUTLET	DN PN	8743	*Nicht benoetigt NOT USED*			
55								
56		Leckbrennstoff Einspritzeinheit Austritt FUEL LEAKAGE ICU OUTLET	DN PN	8745	*Nicht benoetigt NOT USED*			
57		Diverse Leckagen Austritt VARIOUS LEAKAGE OUTLET	DN 32 PN 5/6	8746		X	X	X
58								
59		Begleitheizung Brennstoff Eintritt TRACE HEATING FUEL INLET	DN 15 PN 16	8810	X			X
60		Begleitheizung Brennstoff Austritt TRACE HEATING FUEL OUTLET	DN 15 PN 16	8810		X		X
61		Begleitheizung Brennstoff Eintritt TRACE HEATING FUEL INLET	DN PN	8812	*Nicht benoetigt NOT USED*			
62		Begleitheizung Brennstoff Austritt TRACE HEATING FUEL OUTLET	DN PN	8812	*Nicht benoetigt NOT USED*			
63		Begleitheizung Brennstoffzirkulation Eintritt TRACE HEATING FUEL CIRCULATION INLET	DN PN	8820	*Nicht benoetigt NOT USED*			
64		Begleitheizung Brennstoffzirkulation Austritt TRACE HEATING FUEL CIRCULATION OUTLET	DN PN	8823	*Nicht benoetigt NOT USED*			
65								
66								
67		Feuerloesch Anlage Zylinderblock Eintritt FIRE EXTINGUISHING PLANT CYLINDER BLOCK INLET	DN 32 PN 10	8830	X			X
68		Feuerloesch Anlage Rail Unit Eintritt FIRE EXTINGUISHING PLANT RAIL UNIT INLET	DN PN	8831	*Nicht benoetigt NOT USED*			
69		Feuerloesch Anlage Rail Unit Eintritt FIRE EXTINGUISHING PLANT RAIL UNIT INLET	DN PN	8832	*Nicht benoetigt NOT USED*			
70								
71	siehe Detail SEE DETAIL	Abgas Turbolader Austritt EXHAUST GAS TURBOCHARGER OUTLET		6506 6509		X	X	
72	siehe Detail SEE DETAIL	Abgas Bypass Austritt EXHAUST GAS BY-PASS OUTLET		8103 8108		X	X	
73 *1)		Abgase-Abblaseventil Austritt EXHAUST WASTE GATE OUTLET	DN PN	8135	*IF USED, SEE DAAD116127*			
74-1		Abgassammelleitung Austritt EXHAUST MANIFOLD OUTLET	DN PN	8155	X		X	

				Ko.Gr. KO.GR.	Leitungs-Anschluesse PIPE-CONNECTIONS: Freies Ende FREE END	Antriebseite DRIVING END	Abgasseite EXHAUST SIDE	Brennstoffseite FUEL SIDE
74-2		Abgassammelleitung Eintritt EXHAUST MANIFOLD INLET	DN PN	8155		X	X	
75		iCER Eintritt iCER INLET	DN PN	86??	*Nicht definiert NOT DEFINED*			
76		Versorgungseinheit Pilot Ventil Eintritt SUPPLY UNIT FUEL PILOT VALVE INLET	DN 15 PN 16	5555	X			X
77		Versorgungseinheit Pilot Ventil Austritt SUPPLY UNIT FUEL PILOT VALVE OUTLET	DN 20 PN 16	5555	X			X
78	siehe Detail SEE DETAIL	Gasverteilleitung Eintritt GAS DISTRIBUTOR PIPE INLET	PN 15	8903	X			
79		Gasentlueftungsleitung, motorseitig Austritt GAS RELEASE PIPE, ENGINE SIDE OUTLET	DN 100 PN 10	8910		X		
80		Gasentlueftungsleitung, anlagenseitig Austritt GAS RELEASE PIPE, SYSTEM SIDE OUTLET	DN 20 PN 10	8910	X		X	
81		Doppelrohrzwischenraum Ventilationsleitung Eintritt ANNULAR SPACE AIR VENTING PIPE INLET	DN 32 PN 10	8910		X		
82		Gas Ueberwchg.ltg. Kolben U.seite GAS MONITOR. PIPE PISTON U. SIDE	DN 20 PN 4	8911	X			X

*1) Optionale Ausfuehrung (wenn verlangt)
OPTIONAL EXECUTION (IF REQUIRED)

*2) Standard Ausfuehrung
STANDARD EXECUTION
Vorschlag: Endgueltige Position
ist mit Werft zu bestimmen
PROPOSAL: FINAL POSITION TO BE DETERMINED
IN ACCORDANCE WITH SHIPYARD

*3) Externe Ausfuehrung (wenn verlangt)
EXTERNAL EXECUTION (IF REQUIRED)

1:15
fuer vertikalen Oelablauf
FOR VERTICAL LUB. OIL DRAIN

siehe Ko.Gr. 1110 / 9722
SEE GROUP

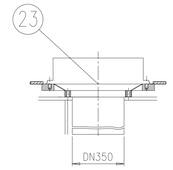

1:8
fuer horizontalen Oelablauf
freies Ende und Antriebseite
FOR HORIZONTAL LUB. OIL DRAIN
FREE END AND DRIVING END

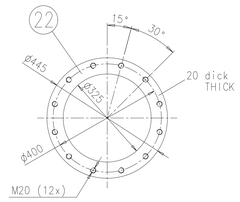

72 Bypass zur Auspuffleitung
EXHAUST BY-PASS 1:8

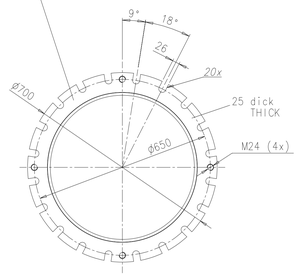

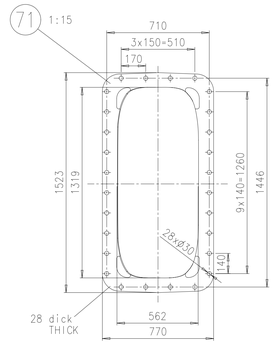

1x A275-L

Free space for ID		Q-Code XXXXX	Main Drw. H
		Standard ISO; JIS	
Mod	Number / Drawn date / Number / Drawn date / Number / Drawn date / Number / Drawn date		

WIN GD Winterthur Gas & Diesel

Product 7X62DF-2.1 (STD)

PIPE CONNECTION PLAN
iCER-INTERFACE
Rohranschlussplan
iCER-interface

Units mm kg NX	Basic Material				Net Weight
SURFACE PROTECTION SEE GROUP 0344	Made 08.02.2021 pje101 Jevremovic	Scale 1:1	Size A0	Page 2/2	Material ID
TOLERANCING PRINCIPLE ISO8015	Chkd 11.02.2021 ihe003 Hercog	Design Group 8020			
GENERAL TOLERANCES ACCORDING TO ISO2768-mK	Appd 11.02.2021 sth017 Thalmann	Drawing ID DAAD139933			Rev. –

Approved

Copyright Winterthur Gas & Diesel Ltd. All rights reserved. By taking possession of the drawing the recipient recognizes and honours these rights. Neither the whole nor any part of this drawing may be used in any way for construction, fabrication, marketing or any other purpose nor copied in any way nor made accessible to third parties without the previous written consent of Winterthur Gas & Diesel Ltd.

SEQ NO	QTY	Item ID	Item Name / Dimension	Standard-ID	Basic Material	Net Weight
1	1	107.390.729.500	FLANGE DIMENSIONS			0.001
2	1	PAAD147122	FLANGE DIMENSIONS			0.01

Prod.				
	7 X62DF-2.1			

Change History

Rev.	Creator	Approver	Approval Date	Change ID	Change Synopsis	Activity Code	E	C
D	hpa101	ihe003	17.11.2021	CNAA000848	Dimension related to YC 48 has been updated		4	3
C	mdo101	sth017	24.09.2021	CNAA000770	Dimension related to YC 45 has been updated		4	3
B	vpu101	ihe003	14.09.2021	CNAA000660	YC dimension updated acc to new TC Position		4	3
-	zta101	yzh102	05.07.2021	CNAA000299	main drawing introduced		-	-

Approved

WIN GD
Winterthur Gas & Diesel

PIPE CONNECTION PLAN

Bill Of Material

Dimension

Copyright **Winterthur Gas & Diesel Ltd.** All rights reserved. By taking possession of the document the recipient recognizes and honours these rights. Neither the whole nor any part of this document may be used in any way for construction, fabrication, marketing or any other purpose nor copied in any way nor made accessible to third parties without the previous written consent of **Winterthur Gas & Diesel Ltd.**

Units	[m] [kg]	Basic Material				Net Weight	0
Main Design	Yes	Design Group	8020	Q-Code	XXXXX	Standard	WDS
Qty per	Engine	A4	Item ID	PTAA000919		BOM Page/s	01/01

Download
"DXF file"

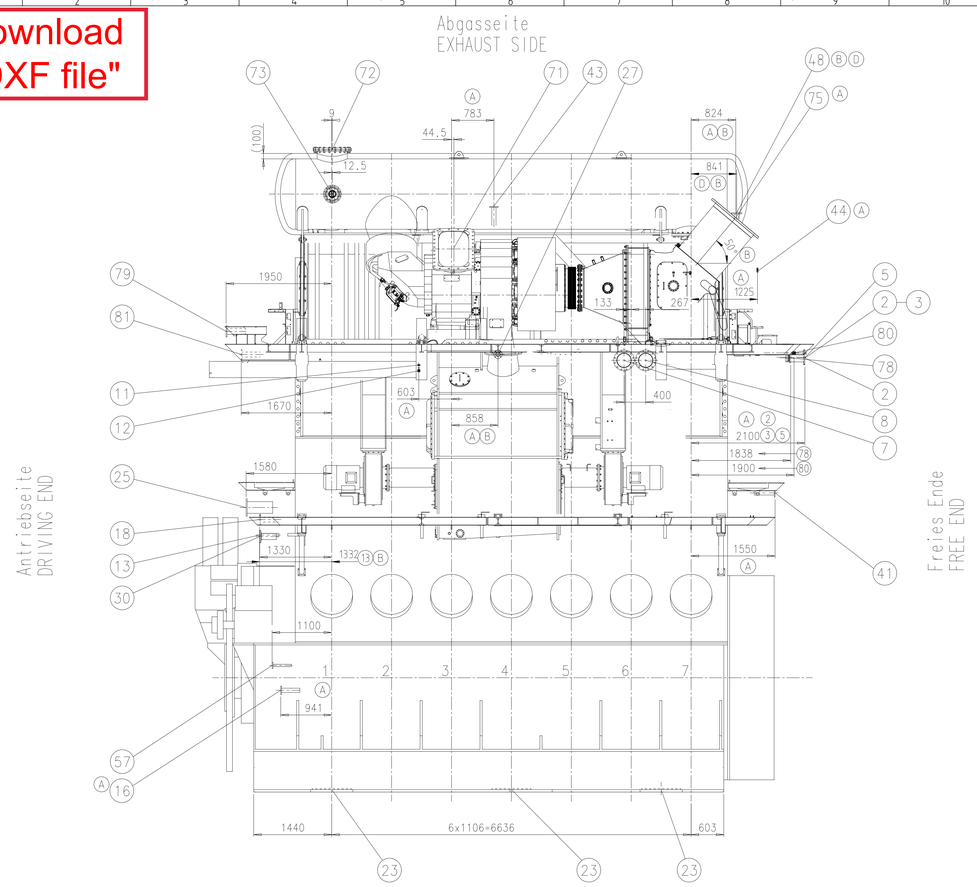

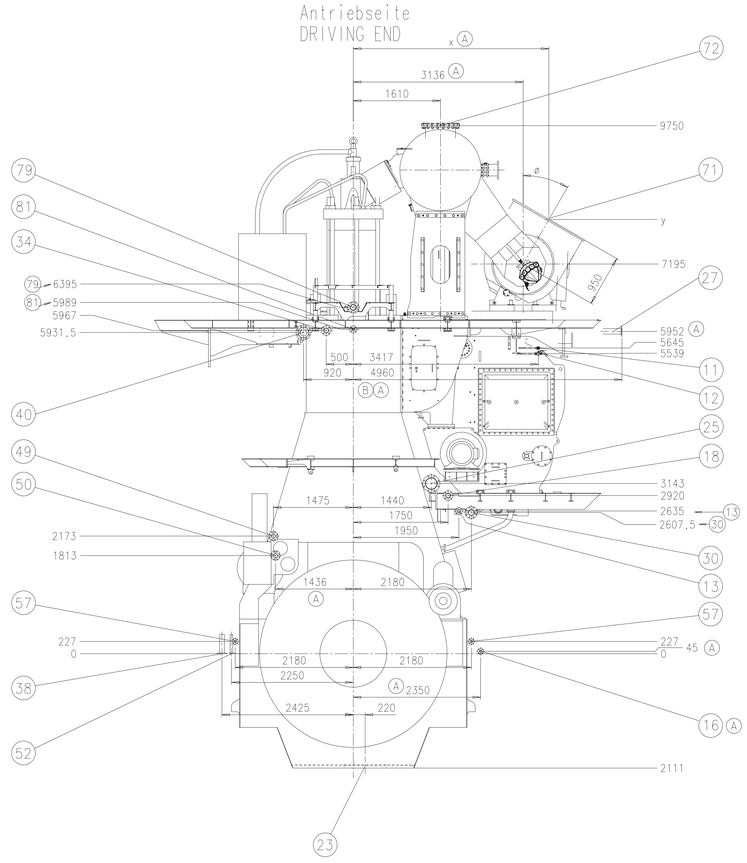

Gasaustritt-Stellung GAS OUTLET POSITION	x	y
0°	3136	8145
15°	3382	8113
30°	3611	8018
45°	3808	7867

*1) Optionale Ausfuehrung (wenn verlangt)
OPTIONAL EXECUTION (IF REQUIRED)

*2) Standard Ausfuehrung
STANDARD EXECUTION
Vorschlag: Endgueltige Position ist mit Werft zu bestimmen
FINAL POSITION TO BE DETERMINED IN ACCORDANCE WITH SHIPYARD

*3) Externe Ausfuehrung (wenn verlangt)
EXTERNAL EXECUTION (IF REQUIRED)

Alle Flanschanschluesse am Motor sind mit Gegenflanschen versehen (Blindflansch), ausgenommen der Anschluss fuer den Gasaustritt am Turbolader. Die Blindflansche sind nach dem betreffenden Rohrdurchmesser des Werftanschlusses aufzubohren.
THE PIPE CONNECTIONS ON THE ENGINE ARE SUPPLIED WITH MATING FLANGES (BLIND), WITH EXCEPTION OF THE TURBOCHARGER EXHAUST GAS OUTLET. BLIND FLANGES TO BE DRILLED TO MATCH PIPE DIA SUPPLIED BY THE SHIPYARD.

Die Gewinde-Anschluesse werden komplett geliefert
SCREWED CONNECTIONS ARE SUPPLIED COMPLETE

DIMENSIONS FOR REFERENCE ONLY. TECHNICAL MODIFICATIONS RESERVED. LATER ADAPTATIONS ARE POSSIBLE BASED ON PROJECT REQUIREMENTS AND RELATED DETAIL DESIGN.
THIS PIPE CONNECTION PLAN MAY NOT BE USED FOR FINAL DESIGN!

1x MET71MB

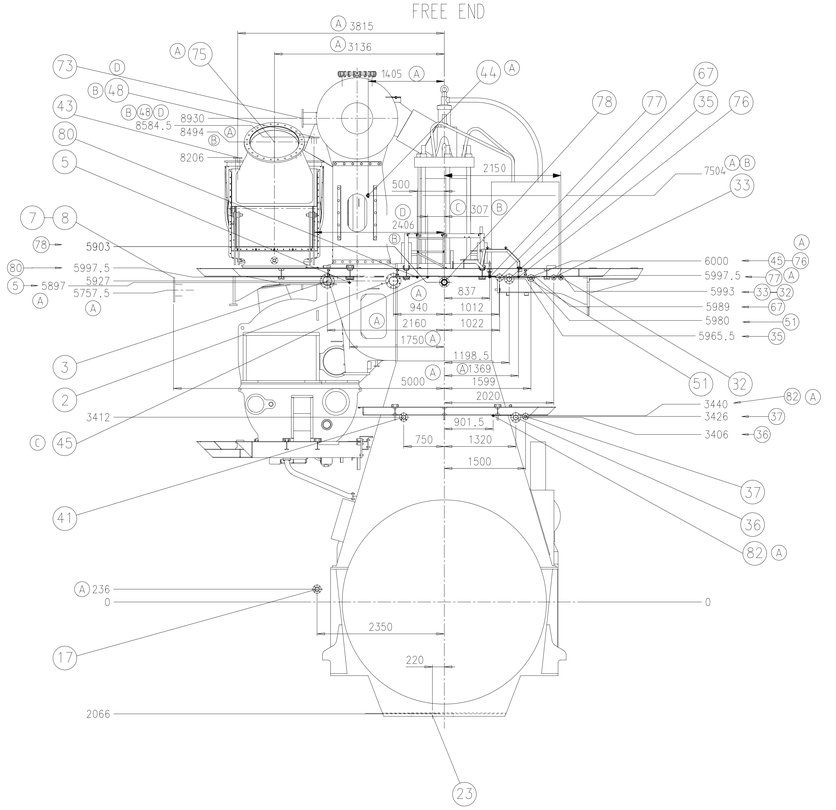

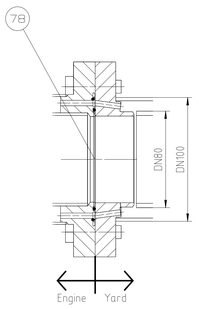

Anschlussprinzip siehe Stueckliste Pos. 002
CONNECTION PRINCIPLE SEE PARTLIST

DIMENSIONS FOR REFERENCE ONLY.
TECHNICAL MODIFICATIONS RESERVED.
LATER ADAPTIONS ARE POSSIBLE BASED ON PROJECT REQUIREMENTS AND RELATED DETAIL DESIGN
THIS PIPE CONNECTION PLAN MAY NOT BE USED FOR FINAL DESIGN!

Rev.	Creator	Approver	Approval Date	Change ID	Change Synopsis	Activity Code	E	C
Proof				7X62DF-2.1				
D	hpa101	ihe003	17.11.2021	CNAA000848	Dimension related to YC 48 has been updated		4	3
C	mda101	sth017	24.09.2021	CNAA000770	Dimension related to YC 45 has been updated		4	3
B	vpu101	ihe003	14.09.2021	CNAA000660	YC dimension updated acc to new TC Position		4	3
-	zta101	yzh102	05.07.2021	CNAA000299	main drawing introduced		-	-

Change History — Approved

WIN GD Winterthur Gas & Diesel

PIPE CONNECTION PLAN

separate BOM available

Dimension

Scale 1:40 | Units [mm] [kg] | Basic Material | Net Weight 0.000

Copyright Winterthur Gas & Diesel Ltd. All rights reserved. Exclusive possession of this drawing belongs to us. We recognize and honours these rights. Neither the whole nor any part of this drawing may be used in any way for construction, reproduction or publication, nor communicated in any way nor made accessible to third parties without the previous written consent of Winterthur Gas & Diesel Ltd.

Main Design	Yes	Design Group	8020	Q-Code XXXXX	Standard WDS
Qty per	Engine	A0	Item ID	PTAA000919	Drawing Page/s 1/2

SURFACE PROTECTION SEE GROUP 0344
TOLERANCING PRINCIPLE ISO8015

				Ko.Gr. KO.GR.	Leitungs-Anschluesse PIPE-CONNECTIONS: Freies Ende FREE END	Antriebseite DRIVING END	Abgasseite EXHAUST SIDE	Brennstoffseite FUEL SIDE
1		Zylinderkuehlwasser Eintritt CYLINDER COOLING WATER INLET	DN PN	8301	*Nicht benoetigt NOT USED*			
2		Zylinderkuehlwasser Eintritt CYLINDER COOLING WATER INLET	DN 150 (B) PN 10	8305	X		X	
3		Zylinderkuehlwasser Austritt CYLINDER COOLING WATER OUTLET	DN 150 (B) PN 5	8310	X		X	
4		Zylinderkuehlwasser Entlueftung Entlueftung CYLINDER COOLING WATER VENTING VENTING	DN PN	8310	*Nicht benoetigt NOT USED*			
5		Zylinderkuehlwasser Entleerung Austritt CYLINDER COOLING WATER DRAIN OUTLET	DN 20 PN 6	8313	X		X	
6		SLK Entleerung Austritt SAC DRAIN OUTLET	DN PN	8314	*Nicht benoetigt NOT USED*			
7		SLK-NT-Kuehlwasser Eintritt SAC-LT-COOLING WATER INLET	DN 250 (B) PN 5	8335	X		X	
8		SLK-NT-Kuehlwasser Austritt SAC-LT-COOLING WATER OUTLET	DN 250 (B) PN 5	8335	X		X	
9		SLK-HT-Kuehlwasser Eintritt SAC-HT-COOLING WATER INLET	DN PN	8335	*Nicht benoetigt NOT USED*			
10		SLK-HT-Kuehlwasser Austritt SAC-HT-COOLING WATER OUTLET	DN PN	8335	*Nicht benoetigt NOT USED*			
11		Wasser fuer Reinigungsanlage TL und SLK Eintritt WATER FOR CLEANING PLANT TC AND SAC INLET	DN 20 PN 16	8338		X	X	
12		Luft fuer Reinigungsanlage TL und SLK Eintritt AIR FOR CLEANING PLANT TC AND SAC INLET	DN 20 PN 16	8338		X	X	
13		Oeliges Wasser vom Receiver Austritt OILY WATER FROM RECEIVER OUTLET	DN 50 (B) PN 5	8352		X	X	
14		Turbolader Schmutzwasser Austritt TURBOCHARGER DIRTY WATER OUTLET	DN PN	8355	*Nicht benoetigt NOT USED*			
15		Ablauf vom Wasserabscheider Austritt WATER DRAIN FROM WATERSEPERATOR OUTLET	DN PN	8356	*Nicht benoetigt NOT USED*			
(A) 16		SLK Waschwasser Austritt SAC WASHING WATER OUTLET	DN 40 (A) PN 5 (B)	8357		X	X	
(A) (B)								
(A) 17		SLK Waschwasser Austritt SAC WASHING WATER OUTLET	DN 50 (B) PN 5	8357	*Nicht benoetigt NOT USED*			
18		SLK Entlueftung Entlueftung SAC VENTING VENTING	DN 80 (B) PN 5	8357		X	X	
19								
20								
21								
22 *1)	siehe Detail SEE DETAIL	Oelablauf Grundplatte Horizontal OIL DRAIN BEDPLATE HORIZONTAL		1110	*Nicht benoetigt NOT USED*			
23 *2)	siehe Detail SEE DETAIL	Oelablauf Grundplatte Vertikal OIL DRAIN BEDPLATE VERTICAL		1110 9722	X	X	X	
24		Zylinder Schmieroel Austritt CYLINDER LUB. OIL OUTLET	DN PN	8472	*Nicht benoetigt NOT USED*			

				Ko.Gr. KO.GR.	Leitungs-Anschluesse PIPE-CONNECTIONS: Freies Ende FREE END	Antriebseite DRIVING END	Abgasseite EXHAUST SIDE	Brennstoffseite FUEL SIDE
25		Hauptschmieroel Eintritt MAIN LUBRICATING OIL INLET	DN 200 (B) PN 5	8406		X	X	
*3) 26		Schmieroel Turbolader Eintritt LUBRICATING OIL TURBOCHARGER INLET	DN PN	8430	*Nicht definiert NOT DEFINED*			
27		Schmieroel Turbolader Austritt LUBRICATING OIL TURBOCHARGER OUTLET	DN 100 (A) PN 5 (B)	8431		X	X	
28		Spueloel Automatikfilter Austritt FLUSHING OIL AUTOMATIC FILTER OUTLET	DN PN	8445	*Nicht benoetigt NOT USED*			
29		Schmutzoel Ablauf Versorgungseinheit Austritt DIRTY OIL DRAIN SUPPLY UNIT OUTLET	DN PN	8452	*Nicht benoetigt NOT USED*			
30		Schmieroel Kreuzkopf Eintritt LUBRICATING OIL CROSSHEAD INLET	DN 100 PN 16	8455		X	X	
31		Leckagen vom Motor Austritt DIRTY OIL LEAKAGE FROM ENGINE OUTLET	DN PN	8463	*Nicht benoetigt NOT USED*			
*1) 32		Zylinder Schmieroel Eintritt (High BN) CYLINDER LUB. OIL INLET (High BN)	DN 25 PN 5	8475	X			X
33		Zylinder Schmieroel Eintritt (Low BN) CYLINDER LUB. OIL INLET (Low BN)	DN 25 PN 5	8475	X			X
34		Leckoel Antriebseite Austritt LEAKAGE OIL DRIVING END OUTLET	DN 80 (B) PN 5	8482		X		X
35		Leckoel Freies Ende Austritt LEAKAGE OIL FREE END OUTLET	DN 80 (B) PN 5	8483	X			X
36		Schmutzoel Kolbenunterseite Austritt DIRTY OIL PISTON UNDERSIDE OUTLET	DN 80 (B) PN 5	8487	X			X
37		Leckoel Stopfbuechse Austritt LEAKAGE OIL GLAND BOX OUTLET	DN 40 (B) PN 5	8488	X			X
38		Oelablauftg. Versorgungseinheit Austritt OIL PIPE DRAIN SUPPLY UNIT OUTLET	DN 80 (B) PN 5	8454		X		X
39		Leckageablauf Zylinderblock Austritt LEAKAGE DRAIN CYLINDER BLOCK OUTLET	DN PN	8462	*Nicht benoetigt NOT USED*			
40		Anlassluft Eintritt STARTING AIR PIPE INLET	DN 125 PN 40	8605		X		X
41		Entlueftung Kurbelgehaeuse Austritt VENTING CRANKCASE OUTLET	DN 65 (B) PN 5	8608	X		X	
42		Entlueftung Waste Gate Austritt VENTING WASTE GATE OUTLET	DN PN	8609	*Nicht benoetigt NOT USED*			
43		Entlueftung Turbolader Austritt VENTING TURBOCHARGER OUTLET	DN 80 (A) PN 5 (B)	8610	X		X	
(A) 44		Entlueftung Zylinderkuehlwasser Austritt VENTING CYLINDER COOLING WATER OUTLET	DN 12 (B) PN 5	8310	X		X	
45		Steuerluftversorgung Eintritt CONTROL AIR SUPPLY INLET	DN 15 PN 12	8630	X			X
46		Steuerluftversorgung Eintritt CONTROL AIR SUPPLY INLET	DN PN	4605	*Nicht benoetigt NOT USED*			
47								
48		EGR Luftspühlleitung Austritt EGR PURGE AIR SUPPLY OUTLET	DN 80 (B) PN 5	8670	X		X	
49		Brennstoff Eintritt FUEL INLET	DN 65 PN 16	8702		X		X

				Ko.Gr. KO.GR.	Leitungs-Anschluesse PIPE-CONNECTIONS: Freies Ende FREE END	Antriebseite DRIVING END	Abgasseite EXHAUST SIDE	Brennstoffseite FUEL SIDE
50		Brennstoffruecklauf Austritt FUEL RETURN OUTLET	DN 65 PN 16	8704		X		X
51		Leckbrennstoff Rail Unit Austritt FUEL LEAKAGE RAIL UNIT OUTLET	DN 50 (B) PN 5	8740	X			X
52		Leckbrennstoff Austritt FUEL LEAKAGE OUTLET	DN 40 PN 5	8744		X		X
53		Leckbrennstoff HD-Leitungen Austritt FUEL LEAKAGE HP-PIPES OUTLET	DN PN	8742	*Nicht benoetigt NOT USED*			
54		Leckbrennstoff Einspritzpumpe Austritt FUEL LEAKAGE INJECTION PUMP OUTLET	DN PN	8743	*Nicht benoetigt NOT USED*			
55								
56		Leckbrennstoff Einspritzeinheit Austritt FUEL LEAKAGE ICU OUTLET	DN PN	8745	*Nicht benoetigt NOT USED*			
57		Diverse Leckagen Austritt VARIOUS LEAKAGE OUTLET	DN 32 (B) PN 5	8746		X	X	X
58								
59		Begleitheizung Brennstoff Eintritt TRACE HEATING FUEL INLET	DN 15 PN 16	8810	*Nicht benoetigt NOT USED*			
60		Begleitheizung Brennstoff Austritt TRACE HEATING FUEL OUTLET	DN 15 PN 16	8810	*Nicht benoetigt NOT USED*			
61		Begleitheizung Brennstoff Eintritt TRACE HEATING FUEL INLET	DN PN	8812	*Nicht benoetigt NOT USED*			
62		Begleitheizung Brennstoff Austritt TRACE HEATING FUEL OUTLET	DN PN	8812	*Nicht benoetigt NOT USED*			
63		Begleitheizung Brennstoffzirkulation Eintritt TRACE HEATING FUEL CIRCULATION INLET	DN PN	8820	*Nicht benoetigt NOT USED*			
64		Begleitheizung Brennstoffzirkulation Austritt TRACE HEATING FUEL CIRCULATION OUTLET	DN PN	8823	*Nicht benoetigt NOT USED*			
65								
66								
67		Feuerloesch Anlage Zylinderblock Eintritt FIRE EXTINGUISHING PLANT CYLINDER BLOCK INLET	DN 32 PN 10	8830	X			X
68		Feuerloesch Anlage Rail Unit Eintritt FIRE EXTINGUISHING PLANT RAIL UNIT INLET	DN PN	8831	*Nicht benoetigt NOT USED*			
69		Feuerloesch Anlage Rail Unit Eintritt FIRE EXTINGUISHING PLANT RAIL UNIT INLET	DN PN	8832	*Nicht benoetigt NOT USED*			
70								
71	siehe Detail SEE DETAIL	Abgas Turbolader Austritt EXHAUST GAS TURBOCHARGER OUTLET		6506 6509		X	X	
72	siehe Detail SEE DETAIL	Abgas Bypass Austritt EXHAUST GAS BY-PASS OUTLET		8103 8108		X	X	
*1) 73		Abgase-Abblaseventil Austritt EXHAUST WASTE GATE OUTLET	DN PN	8135	*IF USED, SEE DAAD116127*			

				Ko.Gr. KO.GR.	Leitungs-Anschluesse PIPE-CONNECTIONS: Freies Ende FREE END	Antriebseite DRIVING END	Abgasseite EXHAUST SIDE	Brennstoffseite FUEL SIDE
75		EGR Eintritt EGR CHARGER INTAKE INLET	DN 900 PN	6520	X		X	
76		Versorgungseinheit Pilot Ventil Eintritt SUPPLY UNIT FUEL PILOT VALVE INLET	DN 15 (A) PN 16	8790	X			X
77		Versorgungseinheit Pilot Ventil Austritt SUPPLY UNIT FUEL PILOT VALVE OUTLET	DN 20 (A) PN 16	8790	X			X
78	siehe Detail SEE DETAIL	Gasverteilleitung Eintritt GAS DISTRIBUTOR PIPE INLET	PN 15	8903	X			
79		Gasentlueftungsleitung, motorseitig Austritt GAS RELEASE PIPE, ENGINE SIDE OUTLET	DN 100 PN 10	8910		X	X	
80		Gasentlueftungsleitung, anlagenseitig Austritt GAS RELEASE PIPE, SYSTEM SIDE OUTLET	DN 20 PN 10	8910	X		X	
81		Doppelrohrzwischenraum Ventilationsleitung Eintritt ANNULAR SPACE AIR VENTING PIPE INLET	DN 32 PN 10	8910		X	X	
82		Gas Ueberwchg.ltg. Kolben U.seite GAS MONITOR. PIPE PISTON U. SIDE	DN 15 (A) PN 4	8911	X			X

*1) Optionale Ausfuehrung (wenn verlangt)
OPTIONAL EXECUTION (IF REQUIRED)

*2) Standard Ausfuehrung
STANDARD EXECUTION
Vorschlag: Endgueltige Position ist mit Werft zu bestimmen
FINAL POSITION TO BE DETERMINED IN ACCORDANCE WITH SHIPYARD

*3) Externe Ausfuehrung (wenn verlangt)
EXTERNAL EXECUTION (IF REQUIRED)

1:15
fuer vertikalen Oelablauf
FOR VERTICAL LUB. OIL DRAIN

siehe Ko.Gr. 1110 / 9722
SEE GROUP

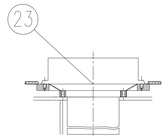

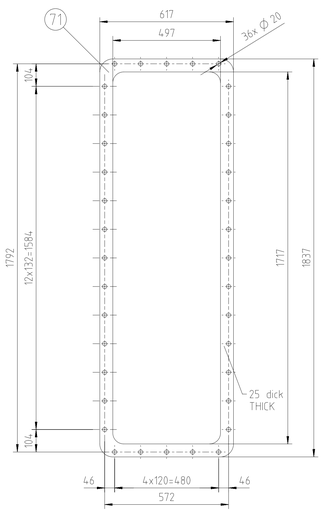

1x MET71MB

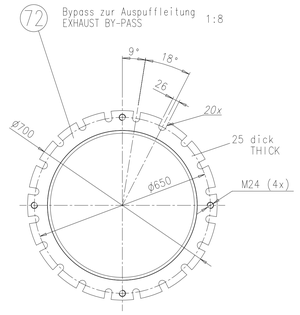

Rev.	Creator	Approver	Approval Date	Change ID	Change Synopsis	Activity Code	E	C
□	hpa101	ihe003	17.11.2021	CNAA000848	Dimension related to YC 48 has been updated		4	3

Approved

SURFACE PROTECTION SEE GROUP 0344

TOLERANCING PRINCIPLE ISO8015

Copyright Winterthur Gas & Diesel Ltd. All rights reserved. By taking possession of this drawing, we acknowledge our exclusive property rights. Neither this drawing nor any part thereof may be used, reproduced, modified, distributed or made available to any other purpose nor copied in any way, nor made accessible to third parties without the previous written consent of Winterthur Gas & Diesel Ltd.

[mm] [kg] 1:1 NX A0 Item ID PTAA000919 Drawing Page/s 2/2

SEQ NO	QTY	Item ID	Item Name / Dimension	Standard-ID	Basic Material	Net Weight
001	1	107.390.729.500	FLANGE DIMENSIONS			0.001
002	1	PAAD147122	FLANGE DIMENSIONS			0.01

Prod.	7 X62DF-2.1			

Change History

Rev.	Creator	Approver	Approval Date	Change ID	Change Synopsis	Activity Code	E	C
-	zta101	sth017	10.03.2022	CNAA001327	Main Design/Drawing Introduced	Approved	-	-

WIN GD
Winterthur Gas & Diesel

PIPE CONNECTION PLAN

Bill Of Material

Dimension

Units	[m] [kg]	Basic Material			Net Weight	0.001
Main Design	Yes	Design Group	8020	Q-Code XXXXX	Standard	WDS
Qty per	Engine	A4	Item ID	PTAA023303	BOM Page/s	01/01

Copyright **Winterthur Gas & Diesel Ltd.** All rights reserved. By taking possession of the document the recipient recognizes and honours these rights. Neither the whole nor any part of this document may be used in any way for construction, fabrication, marketing or any other purpose nor copied in any way nor made accessible to third parties without the previous written consent of **Winterthur Gas & Diesel Ltd.**

Download "DXF file"

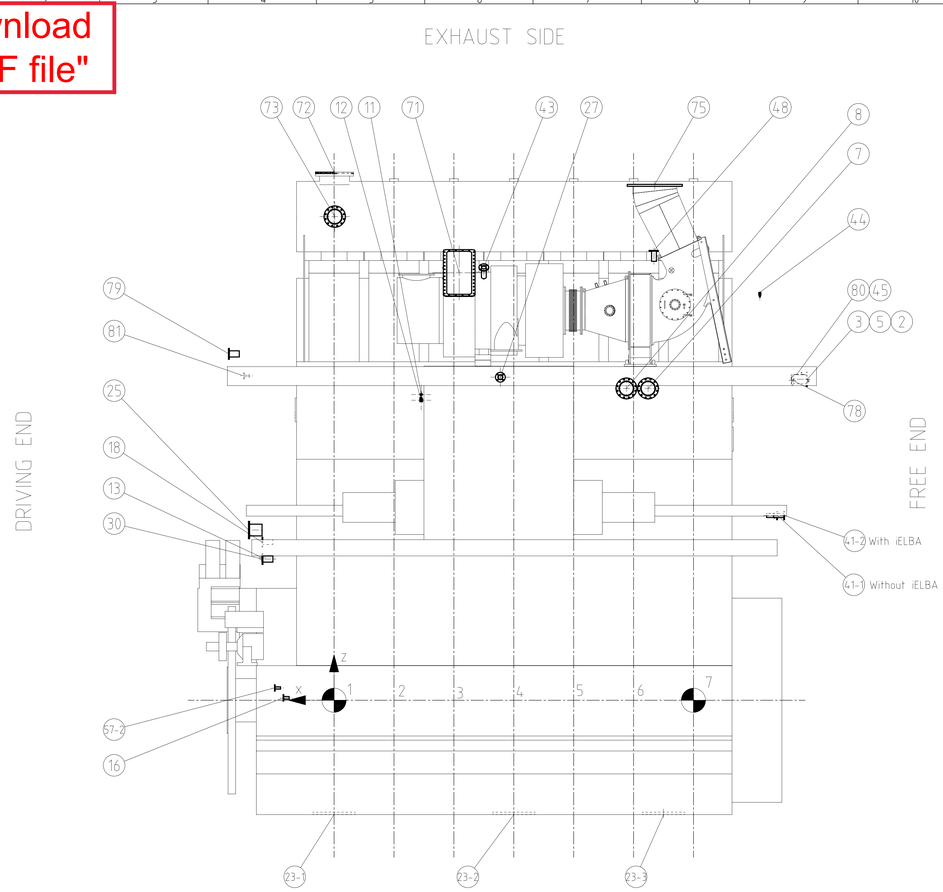

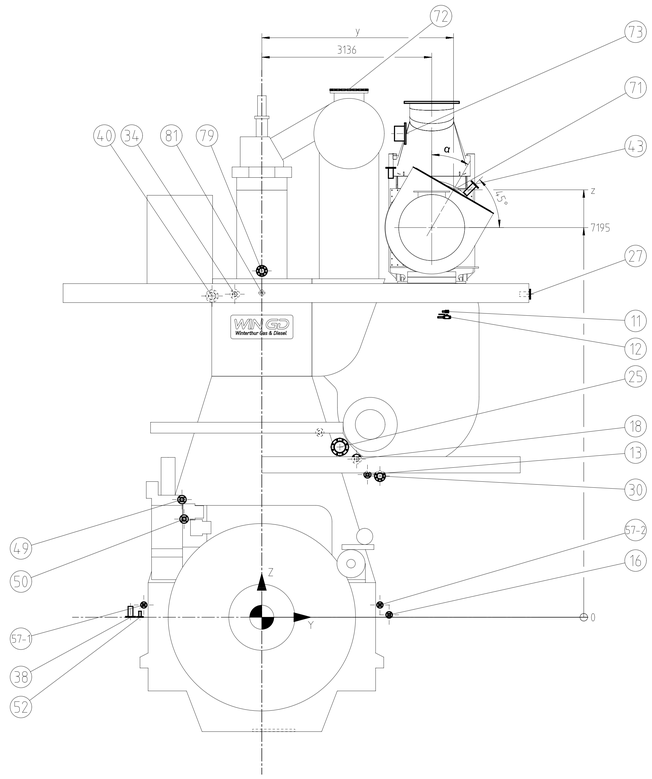

GAS OUTLET POSITION ∢α	y	z
0°	3136	8000
15°	3344	7972.5
30°	3538.5	7892
45°	3705	7764

DIMENSIONS FOR REFERENCE ONLY. TECHNICAL MODIFICATIONS RESERVED. LATER ADAPTATIONS ARE POSSIBLE BASED ON PROJECT REQUIREMENTS AND RELATED DETAIL DESIGN.
THIS PIPE CONNECTION PLAN MAY NOT BE USED FOR FINAL DESIGN!

THE PIPE CONNECTIONS ON THE ENGINE ARE SUPPLIED WITH MATING FLANGES (BLIND), WITH EXCEPTION OF THE TURBO-CHARGER EXHAUST GAS OUTLET. BLIND FLANGES TO BE DRILLED TO MATCH PIPE DIA SUPPLIED BY THE SHIPYARD.

SCREWED CONNECTIONS ARE SUPPLIED COMPLETE

*1) OPTIONAL EXECUTION (IF REQUIRED)

*2) PROPOSAL. FINAL POSITION TO BE DETERMINED IN ACCORDANCE WITH SHIPYARD

*3) EXTERNAL EXECUTION (IF REQUIRED)

MET66MB

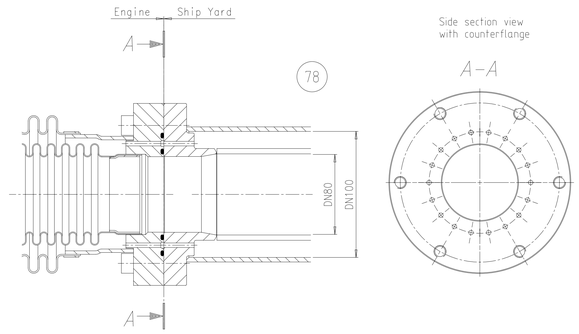

CONNECTION PRINCIPLE SEE PARTLIST POS.002

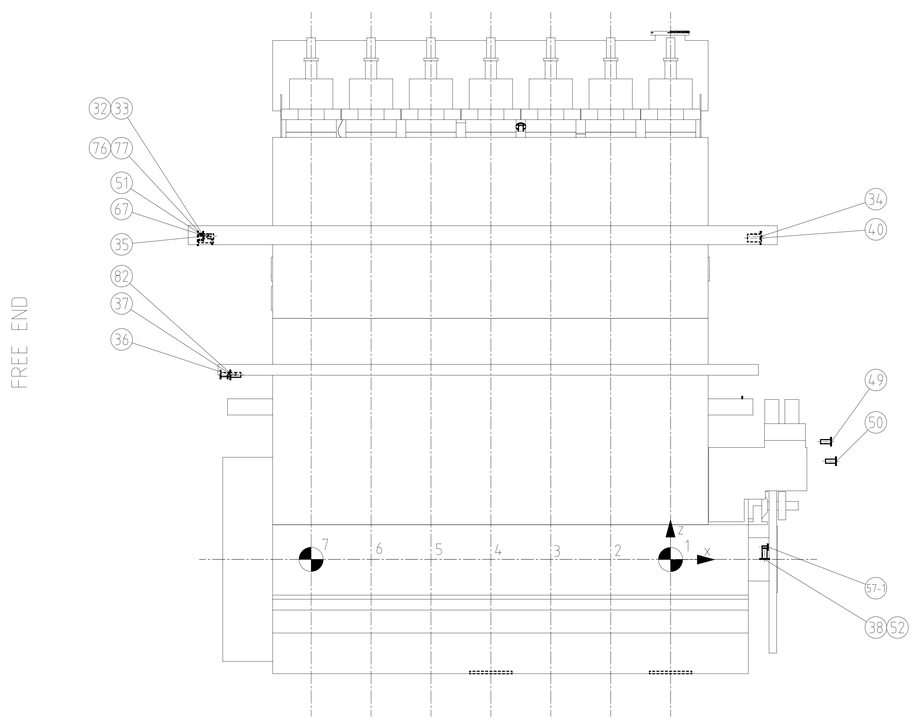

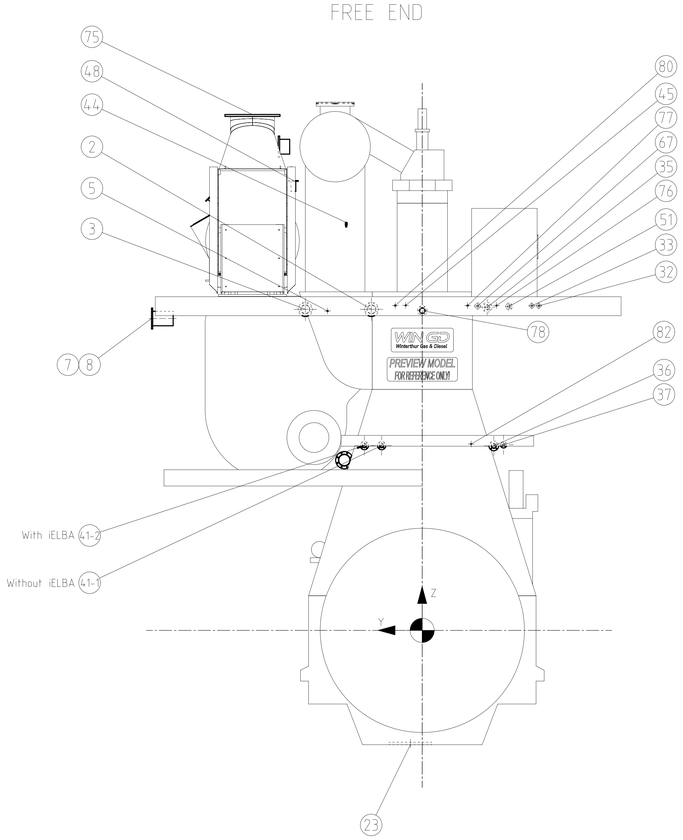

FOR VERTICAL LUB. OIL DRAIN
SEE GROUP 1110 / 9722
*2)

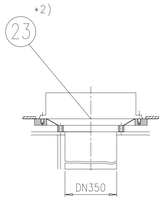

GAS OUTLET FROM TURBOCHARGER

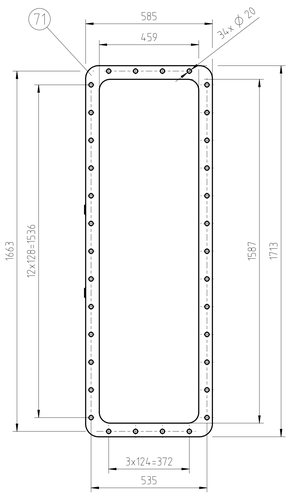

GAS INLET FROM ICER

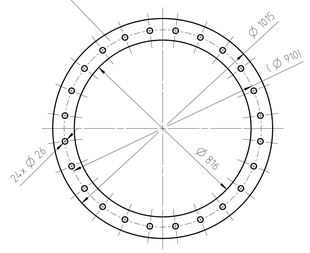

Rev.	Creator	Approver	Approval Date	Change ID	Change Synopsis	Activity Code	E	C
-	zta101	sth017	10.03.2022	CNAA001327	Main Design/Drawing Introduced		-	-

Prod. 7X62DF-2.1

Change History

Approved

WIN GD Winterthur Gas & Diesel

PIPE CONNECTION PLAN

separate BOM available

Dimension

Scale 1:40 NX | Units [mm] [kg] | Basic Material | Net Weight 0.001

Main Design Yes | Design Group 8020 | Q-Code XXXXX | Standard WDS

Qty per Engine A0 | Item ID PTAA023303 | Drawing Pages 1/2

SURFACE PROTECTION SEE GROUP 0344
TOLERANCING PRINCIPLE ISO8015
GENERAL TOLERANCES ACCORDING TO ISO2768-mK

Copyright Winterthur Gas & Diesel Ltd. All rights reserved. This document is the property of Winterthur Gas & Diesel and honours these rights. Neither the whole nor any part of this drawing may be used in any way for construction, fabrication, marketing or any other purpose nor copied in any way nor made accessible to third parties without the previous written consent of Winterthur Gas & Diesel Ltd.

NO.				DG.	X	Y	Z
1		CYLINDER COOLING WATER INLET	DN PN	8301	NOT USED		
2		CYLINDER COOLING WATER INLET	DN 150 PN 10	8305	⊕CYL.7 -2100	940	5927
3		CYLINDER COOLING WATER OUTLET	DN 150 PN 5	8310	⊕CYL.7 -2100	2160	5927
4		CYLINDER COOLING WATER VENTING	DN PN	8310	NOT USED		
5		CYLINDER COOLING WATER DRAIN OUTLET	DN 20 PN 5	8313	⊕CYL.7 -2100	1750	5897
6		SAC DRAIN OUTLET	DN PN	8314	NOT USED		
7		SAC-LT-COOLING WATER INLET	DN 250 PN 5	8335	-5797	5000	5757.5
8		SAC-LT-COOLING WATER OUTLET	DN 250 PN 5	8335	-5397	5000	5757.5
9		SAC-HT-COOLING WATER INLET	DN PN	8335	NOT USED		
10		SAC-HT-COOLING WATER OUTLET	DN PN	8335	NOT USED		
11		WATER FOR CLEANING PLANT TC AND SAC INLET	DN 20 PN 8	8338	-1608.5	3417	5644
12		AIR FOR CLEANING PLANT TC AND SAC INLET	DN 20 PN 8	8338	-1608.5	3417	5539
13		OILY WATER FROM RECEIVER OUTLET	DN 50 PN 5	8352	1332	1950	2635
14		TURBOCHARGER DIRTY WATER OUTLET	DN PN	8355	NOT USED		
15		WATER DRAIN FROM WATERSEPERATOR OUTLET	DN PN	8356	NOT USED		
16		SAC CONDENSATE WATER OUTLET	DN 40 PN 5	8357	941	2350	44.5
17		SAC WASHING WATER OUTLET	DN PN	8357	NOT USED		
18		SAC VENTING VENTING	DN 80 PN 5	8357	1330	1750	2920
19							
20		OIL PIPE DRAIN FUEL PUMPS OUTLET	DN PN	8454	NOT USED		
21		LEAKAGE OIL FUEL SIDE OUTLET	DN PN	8481	NOT USED		
22-1	SEE DETAIL	OIL DRAIN BEDPLATE HORIZONTAL		1110	NOT USED		
22-2	SEE DETAIL	OIL DRAIN BEDPLATE HORIZONTAL					
22-3	SEE DETAIL	OIL DRAIN BEDPLATE HORIZONTAL					
22-4	SEE DETAIL	OIL DRAIN BEDPLATE HORIZONTAL					
23-1	SEE DETAIL	OIL DRAIN BEDPLATE VERTICAL		1110 9722	0	220	-2111
23-2	SEE DETAIL	OIL DRAIN BEDPLATE VERTICAL			-3318	220	-2111
23-3	SEE DETAIL	OIL DRAIN BEDPLATE VERTICAL			-6083	220	-2111
24		CYLINDER LUB. OIL OUTLET	DN PN	8472	NOT USED		
25		MAIN LUBRICATING OIL INLET	DN 200 PN 5	8406	1580	1440	3143
26		LUBRICATING OIL TURBOCHARGER INLET	DN PN	8430	NOT USED		
27		LUBRICATING OIL TURBOCHARGER OUTLET	DN 80 PN 5	8431	-3070	4960	5965
28		LUBRICATING OIL FUEL PUMPS OUTLET	DN PN	8445	NOT USED		
29		DIRTY OIL DRAIN SUPPLY UNIT OUTLET	DN PN	8452	NOT USED		

NO.				DG.	X	Y	Z
30*3		LUBRICATING OIL CROSSHEAD INLET	DN 100 PN 16	8455	1329.5	2180	2607.5
31		DIRTY OIL LEAKAGE FROM ENGINE OUTLET	DN PN	8463	NOT USED		
32*1		CYLINDER LUB. OIL (HIGH BN) INLET	DN 25 PN 5	8475	⊕CYL.7 -2000	-2150	5993
33		CYLINDER LUB. OIL (LOW BN) INLET	DN 25 PN 5	8475	⊕CYL.7 -2000	-2020	5993
34		LEAKAGE OIL DRIVING END OUTLET	DN 80 PN 5	8482	1670	-500	5965
35		LEAKAGE OIL FREE END OUTLET	DN 80 PN 5	8483	⊕CYL.7 -2000	-1198.5	5965
36		DIRTY OIL PISTON UNDERSIDE OUTLET	DN 80 PN 5	8487	⊕CYL.7 -1500	-1320	3406
37		LEAKAGE OIL GLAND BOX OUTLET	DN 40 PN 5	8488	⊕CYL.7 -1500	-1500	3426
38		OIL PIPE DRAIN SUPPLY UNIT OUTLET	DN 80 PN 5	8454	1736.5	-2425	0
39		LEAKAGE DRAIN CYLINDER BLOCK OUTLET	DN PN	8462	NOT USED		
40		STARTING AIR PIPE INLET	DN 125 PN 30	8605	1669	-920	5931.5
41-1		VENTING CRANKCASE (Without iELBA) OUTLET	DN 65 PN 5	8608	⊕CYL.7 -1550	750	3412
41-2		VENTING CRANKCASE (With iELBA) OUTLET	DN 65 PN 5	8608	⊕CYL.7 -1680	1070	3412
42		VENTING WASTE GATE OUTLET	DN PN	8609	NOT USED		
43		VENTING TURBOCHARGER OUTLET	DN 80 PN 5	8610	-2765	3936	7995
44		VENTING CYLINDER COOLING WATER OUTLET	DN 12 PN 5	8310	⊕CYL.7 -1225	1405	7504
45		CONTROL AIR SUPPLY INLET	DN 15 PN 8	8630	⊕CYL.7 -1902	307	6000
46		CONTROL AIR SUPPLY INLET	DN PN	4605	NOT USED		
47							
48		EGR PURGE AIR SUPPLY OUTLET	DN 80 PN 5	8670	⊕CYL.7 730	2381	8305
49		FUEL INLET	DN 65 PN 16	8702	2970	-1475	2173
50		FUEL RETURN OUTLET	DN 65 PN 16	8704	3061	-1436	1813
51		FUEL LEAKAGE RAIL UNIT OUTLET	DN 50 PN 5	8740	⊕CYL.7 -2000	-1599	5980
52		FUEL LEAKAGE OUTLET	DN 40 PN 5	8744	1716	-2250	0
53		FUEL LEAKAGE HP-PIPES OUTLET	DN PN	8742	NOT USED		
54		FUEL LEAKAGE INJECTION PUMP OUTLET	DN PN	8743	NOT USED		
55							
56		FUEL LEAKAGE ICU OUTLET	DN PN	8745	NOT USED		
57-1		DRAIN PIPES VARIOUS OUTLET	DN 32 PN 5	8746	1800	-2180	227
57-2		DRAIN PIPES VARIOUS OUTLET	DN 32 PN 5		1100	2180	227
58							
59		TRACE HEATING FUEL INLET	DN PN	8810	NOT USED		
60		TRACE HEATING FUEL OUTLET	DN PN	8810	NOT USED		

NO.				DG.	X	Y	Z
61		TRACE HEATING FUEL INLET	DN PN	8812	NOT USED		
62		TRACE HEATING FUEL OUTLET	DN PN	8812	NOT USED		
63		TRACE HEATING FUEL CIRCULATION INLET	DN PN	8820	NOT USED		
64		TRACE HEATING FUEL CIRCULATION OUTLET	DN PN	8823	NOT USED		
65							
66							
67		FIRE EXTINGUISHING PLANT CYLINDER BLOCK INLET	DN 32 PN 10	8830	⊕CYL.7 -2000	-1022	5989
68		FIRE EXTINGUISHING PLANT RAIL UNIT INLET	DN PN	8831	NOT USED		
69		FIRE EXTINGUISHING PLANT RAIL UNIT INLET	DN PN	8832	NOT USED		
70							
71	SEE DETAIL	EXHAUST GAS TURBOCHARGER OUTLET		6506 6509	-2310	SEE PAGE ONE	
72	SEE DETAIL	EXHAUST GAS BY-PASS OUTLET		8103 8108	-9	1610	9750
73*1*2		EXHAUST WASTE GATE OUTLET	DN PN	8135	IF USED, SEE DAAD116127		
74							
75		EGR CHARGER INTAKE INLET	DN 800 PN	6520	-5921	3136	9525
76		SUPPLY UNIT FUEL PILOT VALVE INLET	DN 15 PN 16	8790	⊕CYL.7 -2022	-1369	5997
77		SUPPLY UNIT FUEL PILOT VALVE OUTLET	DN 20 PN 16	8790	⊕CYL.7 -2022	-837	5997
78*4	SEE DETAIL	GAS SUPPLY PIPE INLET	PN 15	8903	⊕CYL.7 (-1838)	(0)	(5903)
79		GAS RELEASE PIPE, ENGINE SIDE OUTLET	DN 100 PN 10	8910	1950	0	6395
80		GAS RELEASE PIPE, SYSTEM SIDE OUTLET	DN 20 PN 10	8910	⊕CYL.7 -1900	500	5997.5
81		ANNULAR SPACE AIR VENTING PIPE INLET	DN 32 PN 10	8910	1670	0	5989
82		GAS MONITOR. PIPE PISTON U. SIDE	DN 15 PN 4	8911	⊕CYL.7 -1771	-901.5	3440

⊕CYL.7 = MEASSURED FROM FREE END (CYL. 7)

FREE END - X + DRIVING END

FUEL SIDE - Y + EXHAUST SIDE

BOTTOM - Z + TOP

*1) *OPTIONAL EXECUTION (IF REQUIRED)*

*2) *PROPOSAL, FINAL POSITION TO BE DETERMINED IN ACCORDANCE WITH SHIPYARD*

*3) EXTERNAL EXECUTION (IF REQUIRED)

*4) INSTALLATION TOLERANCE +/- 1 mm
COMPENSATOR HAS TO BE INSTALLED STRESS FREE

72 EXHAUST BY-PASS 1:8

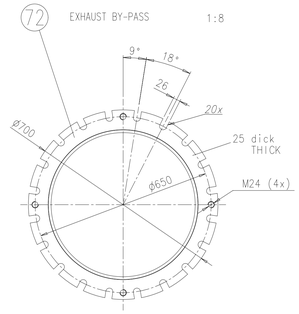

MET66MB

SURFACE PROTECTION SEE GROUP 0344
TOLERANCING PRINCIPLE ISO8015
GENERAL TOLERANCES ACCORDING TO ISO2768-mK

Rev.	Creator	Approver	Approval Date	Change ID	Change Synopsis	Activity Code	E	C
-	ztfa101	sthb17	10.03.2022	CNAA001327	Main Design/Drawing Introduced	-	-	-

Approved

[mm] [kg] 1:1 A0 NX

Item ID PTAA023303

Drawing Page/s 2/2

Copyright Wärtsilä Gas & Diesel Ltd. All rights reserved. By taking possession of this drawing the recipient recognizes and honours these rights. Neither this whole drawing nor any part thereof may be used, copied, reproduced, modified, published, distributed or in any other purpose not stated in any way not made accessible to third parties without the previous written consent of Wärtsilä Gas & Diesel Ltd.

ISO

PN	DN	OUT.DIA.	THICK	DIM. FOR SCREWS			
6 bar	25	100	14	75	4	M10	11
	32	120	16	90	4	M12	14
	40	130	16	100	4	M12	14
	50	140	16	110	4	M12	14
	65	160	16	130	4	M12	14
	80	190	18	150	4	M16	18
	100	210	18	170	4	M16	18
	125	240	20	200	8	M16	18
	150	265	20	225	8	M16	18
	200	320	22	280	8	M16	18
	250	375	24	335	12	M16	18
	300	440	24	395	12	M20	22
	350	490	26	445	12	M20	22
	400	540	28	495	16	M20	22
	450	595	30	550	16	M20	22
	500	645	30	600	20	M20	22

PN	DN	OUT.DIA.	THICK	DIM. FOR SCREWS			
16 bar	25	115	16	85	4	M12	14
	32	140	18	100	4	M16	18
	40	150	18	110	4	M16	18
	50	165	19	125	4	M16	18
	65	185	20	145	8	M16	18
	80	200	20	160	8	M16	18
	100	220	22	180	8	M16	18
	125	250	22	210	8	M16	18
	150	285	24	240	8	M20	22
	200	340	26	295	12	M20	22
	250	405	32	355	12	M24	26
	300	460	32	410	12	M24	26
	350	520	35	470	16	M24	26
	400	580	38	525	16	M27	30
	450	640	42	585	20	M27	30
	500	715	46	650	20	M30	33

PN	DN	OUT.DIA.	THICK	DIM. FOR SCREWS			
10 bar	25	115	16	85	4	M12	14
	32	140	18	100	4	M16	18
	40	150	18	110	4	M16	18
	50	165	19	125	4	M16	18
	65	185	20	145	8	M16	18
	80	200	20	160	8	M16	18
	100	220	22	180	8	M16	18
	125	250	22	210	8	M16	18
	150	285	24	240	8	M20	22
	200	340	24	295	8	M20	22
	250	395	26	350	12	M20	22
	300	445	26	400	12	M20	22
	350	505	28	460	16	M20	22
	400	565	32	515	16	M24	26
	450	615	38	565	20	M24	26
	500	670	38	620	20	M24	26

PN	DN	OUT.DIA.	THICK	DIM. FOR SCREWS			
40 bar	25	115	16	85	4	M12	14
	32	140	18	100	4	M16	18
	40	150	18	110	4	M16	18
	50	165	20	125	4	M16	18
	65	185	22	145	8	M16	18
	80	200	24	160	8	M16	18
	100	235	26	190	8	M20	22
	125	270	28	220	8	M24	26
	150	300	30	250	8	M24	26
	200	375	36	320	12	M27	30
	250	450	44	385	12	M30	33
	300	515	48	450	16	M30	33
	350	580	54	510	16	M33	36
	400	660	60	585	16	M36	39

JIS

PN	DN	OUT.DIA.	THICK	DIM. FOR SCREWS			
5 bar	25	95	10	75	4	M10	12
	32	115	12	90	4	M12	15
	40	120	12	95	4	M12	15
	50	130	14	105	4	M12	15
	65	155	14	130	4	M12	15
	80	180	14	145	4	M16	19
	100	200	16	165	8	M16	19
	125	235	16	200	8	M16	19
	150	265	18	230	8	M16	19
	200	320	20	280	8	M20	23
	250	385	22	345	12	M20	23
	300	430	22	390	12	M20	23
	350	480	24	435	12	M22	25
	400	540	24	495	16	M22	25
	450	605	24	555	16	M22	25
	500	655	24	605	20	M22	25

PN	DN	OUT.DIA.	THICK	DIM. FOR SCREWS			
16 bar	25	125	14	90	4	M16	19
	32	135	16	100	4	M16	19
	40	140	16	105	4	M16	19
	50	155	16	120	8	M16	19
	65	175	18	140	8	M16	19
	80	200	20	160	8	M20	23
	100	225	22	185	8	M20	23
	125	270	22	225	8	M22	25
	150	305	24	260	12	M22	25
	200	350	26	305	12	M22	25
	250	430	28	380	12	M24	27
	300	480	30	430	16	M24	27
	350	540	34	480	16	M30	33
	400	605	38	540	16	M30	33
	450	675	40	605	20	M30	33
	500	730	42	660	20	M30	33

PN	DN	OUT.DIA.	THICK	DIM. FOR SCREWS			
10 bar	25	125	14	90	4	M16	19
	32	135	16	100	4	M16	19
	40	140	16	105	4	M16	19
	50	155	16	120	4	M16	19
	65	175	18	140	4	M16	19
	80	185	18	150	8	M16	19
	100	210	18	175	8	M16	19
	125	250	20	210	8	M20	23
	150	280	22	240	8	M20	23
	200	330	22	290	12	M20	23
	250	400	24	355	12	M22	25
	300	445	24	400	16	M22	25
	350	490	26	445	16	M22	25
	400	560	28	510	16	M24	27
	450	620	30	565	20	M24	27
	500	675	30	620	20	M24	27

PN	DN	OUT.DIA.	THICK	DIM. FOR SCREWS			
30 bar	25	130	20	95	4	M16	19
	32	140	22	105	4	M16	19
	40	160	22	120	4	M20	23
	50	165	22	130	8	M16	19
	65	200	26	160	8	M20	23
	80	210	28	170	8	M20	23
	100	240	32	195	8	M22	25
	125	275	36	230	8	M22	25
	150	325	38	275	12	M24	27
	200	370	42	320	12	M24	27
	250	450	48	390	12	M30	33
	300	515	52	450	16	M30	33
	350	560	54	495	16	M30	33
	400	630	60	560	16	M36	39

Substitute for:

PC	Q-Code	X	X	X	X	X

Modif											
	A	EAAD084180	04.10.2012								
		Number	Drawn Date		Number	Drawn Date		Number	Drawn Date		Number	Drawn Date

WÄRTSILÄ

Product
W-2S

Flange Dimensions

Made	19.09.2007	N. Brand	Main Drw.	Page 1 / 1	Material ID **107.390.729.500**
Chkd	27.09.2007	M. Frei	Design Group **8020**	Drawing ID **107.390.729**	Rev **A**
Appd	27.09.2007	B. Haag			

Copyright Wärtsilä. All rights reserved. By taking possession of the drawing, the recipient recognizes and honors these rights. Neither the whole nor any part of this drawing may be used in any way for construction, fabrication, marketing or any other purpose nor copied in any way nor made accessible to third parties without the previous written consent of Wärtsilä.

Download "DXF file"

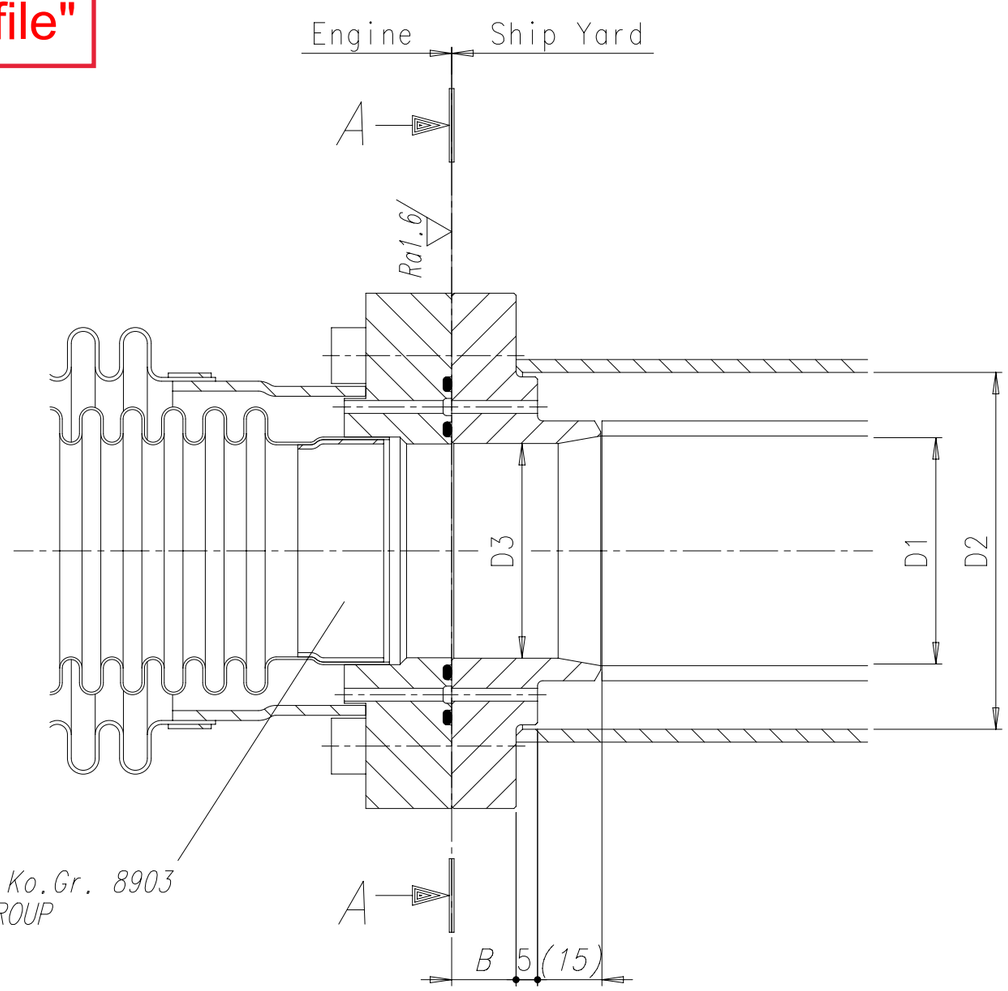

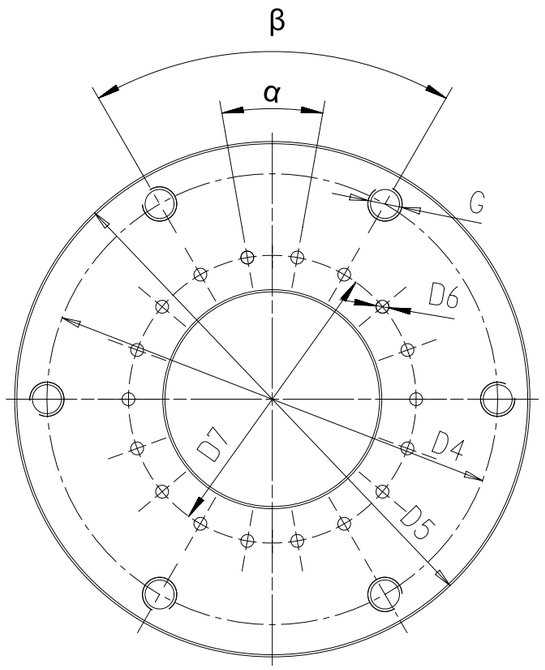

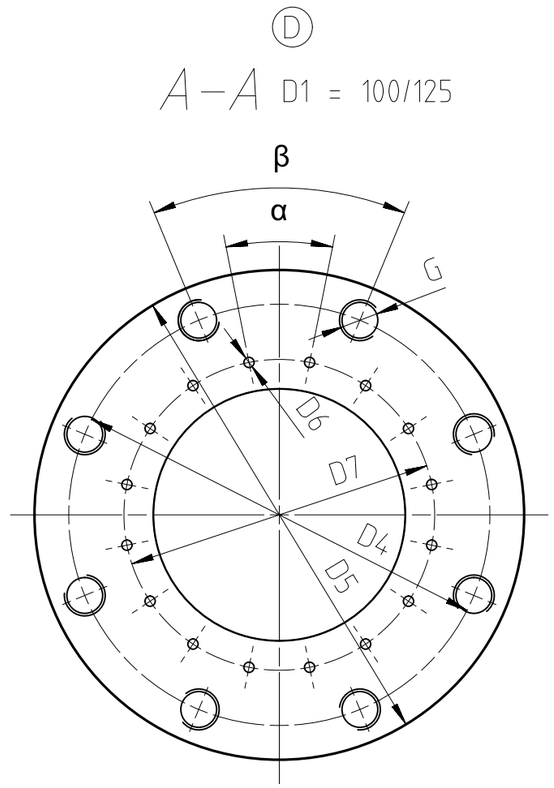

Ra12,5

Rohrleitungs Spezifikationen gemaess Ko.Gr.8903
PIPING SPECIFICATIONS ACCORDING GROUP

D1	D2	D3 (A)	D4	D5	D6 (C)	D7	B	G	α	β (D)
DN	DN	mm	mm	mm	mm	mm	mm			
40	65									
50	80	47	105	120	3	67	15	M8	20°	60°
80	100	79	155	180	5	104	20	M12	20°	60°
100	125	95	174	200	5	125	20	M12	22.5°	45°
125	150	127	206	240	5	152	25	M16	22.5°	45°

(C) (D) (E)

(F)

(D)

SURFACE PROTECTION SEE GROUP 0344
TOLERANCING PRINCIPLE ISO8015
GENERAL TOLERANCES ACCORDING TO ISO2768-mK

Free space for lic.

Q-Code XXXXX
Standard ISO; JIS
Main Drw.

Modif.	Number	Drawn date	Number	Drawn date	Number	Drawn date	Number	Drawn date
(C)	EAAD087857	13.12.2017	(D) EAAD090045	15.11.2018	(E) EAAD090428	14.06.2019	(F) EAAD095585	27.11.2020

WIN GD Winterthur Gas & Diesel

Product W-2S

FLANGE DIMENSIONS

Flanschabmessungen

Units mm kg | NX | Basic Material | Net Weight 0,01

Made	17.10.2015 rsox04 R.W.Sola	Scale 1:1	Size A3 / Page 1/1 / Material ID PAAD147122
Chkd	04.09.2014 ihe003 Herceg	Design Group 8020	
Appd	05.09.2014 bha009 Haag		Drawing ID DAAD045822 / Rev. F

Approved

ILD - INSTALLATION DRAWING - Internal

Copyright Winterthur Gas & Diesel Ltd. All rights reserved. By taking possession of the drawing the recipient recognizes and honours these rights. Neither the whole nor any part of this drawing may be used in any way for construction, fabrication, marketing or any other purpose nor copied in any way nor made accessible to third parties without the previous written consent of Winterthur Gas & Diesel Ltd.

WinGD-7X62DF-2.1 _Pipe Connection Plan

TRACK CHANGES

DATE	SUBJECT	DESCRIPTION
2021-04-06	DRAWING SET	First web upload
2021-09-15	PTAA000919	New Pipe Connection Plan for Turbocharger type 1xMET 71MB has been added.
2021-12-02	PTAA000919	Revised Pipe Connection Plan for Turbocharger type 1xMET 71MB has been added.
2022-03-23	PTAA023303	New Pipe Connection Plan for Turbocharger type 1xMET 66MB has been added.

DISCLAIMER

© Copyright by Winterthur Gas & Diesel Ltd.
All rights reserved. No part of this document may be reproduced or copied in any form or by any means (electronic, mechanical, graphic, photocopying, recording, taping or other information retrieval systems) without the prior written permission of the copyright owner.

THIS PUBLICATION IS DESIGNED TO PROVIDE AN ACCURATE AND AUTHORITATIVE INFORMATION WITH REGARD TO THE SUBJECT-MATTER COVERED AS WAS AVAILABLE AT THE TIME OF PRINTING. HOWEVER, THE PUBLICATION DEALS WITH COMPLICATED TECHNICAL MATTERS SUITED ONLY FOR SPECIALISTS IN THE AREA, AND THE DESIGN OF THE SUBJECT-PRODUCTS IS SUBJECT TO REGULAR IMPROVEMENTS, MODIFICATIONS AND CHANGES. CONSEQUENTLY, THE PUBLISHER AND COPYRIGHT OWNER OF THIS PUBLICATION CAN NOT ACCEPT ANY RESPONSIBILITY OR LIABILITY FOR ANY EVENTUAL ERRORS OR OMISSIONS IN THIS BOOKLET OR FOR DISCREPANCIES ARISING FROM THE FEATURES OF ANY ACTUAL ITEM IN THE RESPECTIVE PRODUCT BEING DIFFERENT FROM THOSE SHOWN IN THIS PUBLICATION. THE PUBLISHER AND COPYRIGHT OWNER SHALL UNDER NO CIRCUMSTANCES BE HELD LIABLE FOR ANY FINANCIAL CONSEQUENTIAL DAMAGES OR OTHER LOSS, OR ANY OTHER DAMAGE OR INJURY, SUFFERED BY ANY PARTY MAKING USE OF THIS PUBLICATION OR THE INFORMATION CONTAINED HEREIN.