NetWeight						
0,001						
1	002	107.429.532.500	CONCEPT GUIDANCE Freshwater generation	107.429.532		0,001
1	001	PAAD099745	CENTRAL COOLING WATER SYSTEM	DAAD031234		0,001
Quantity PER ENGINE	SEQ NO	Material ID	Material Name Dimension, Occ	Standard or Drawing	Basic Material Material Standard	Weight GR./NET

MaterialID	Free space for lic.													Q-Code	Main Drw.
PAAD099857														XXXXX	H
														Standard ISO; JIS	
	Modif.	A	EAAD089971	13.11.2018											
			Number	Drawn date		Number	Drawn date		Number	Drawn date		Number	Drawn date		

WIN GD
Winterthur Gas & Diesel

Product
W5-8X62

COOLING WATER SYSTEMS

Kuehlwassersystem

Units mm kg	NX		Basic Material			Net Weight
Made	17.09.2012	asex06	A.Sekulic	Scale –	Size A3	Page 1/1	Material ID
Chkd	03.12.2012	mhu019	Hug	Design Group 9721	Drawing ID DAAD031310	Rev. A
Appd	03.12.2012	wwr001	Wroblewski			

SURFACE PROTECTION SEE GROUP 0344
TOLERANCING PRINCIPLE ISO8015
GENERAL TOLERANCES ACCORDING TO ISO2768-mK

Approved

DID - DIMENSIONAL DRAWING - Confidential

Copyright Winterthur Gas & Diesel Ltd. All rights reserved. By taking possession of the drawing the recipient recognizes and honours these rights. Neither the whole nor any part of this drawing may be used in any way for construction, fabrication, marketing or any other purpose nor copied in any way nor made accessible to third parties without the previous written consent of Winterthur Gas & Diesel Ltd.

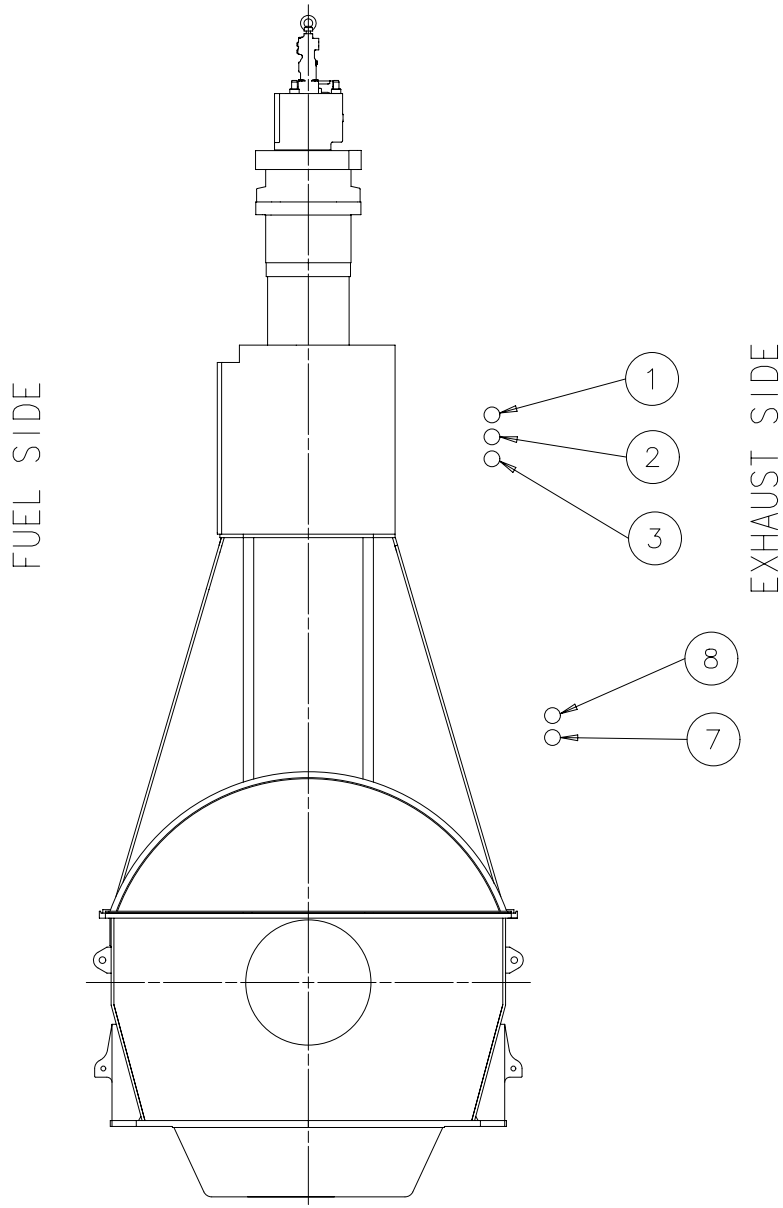

SPECIFICATION which must be met:

H	1	INLET - Cylinder cooling water (HT water) - Cooling water pressure: 4.0 - 5.0 bar - Cooling water volume flow: according to GTD specification. - Cooling water (freshwater) has to be treated according to WinGD's specification. - A buffer unit must be installed - The static pressure at engine inlet must be adjusted by buffer unit pressure setting . - Pre-heating: The engine must be warmed-up by means of heated HT water to min. 60°C before engine start. - HT cooling water amount on engine side: Given in table1 on page 2
H	2	INLET - Cylinder liner cooling water - Cooling water to the liner to be branched off before the CCW cooler from the common cooling water feed. - Cooling water flow: according to GTD specification - Cooling water pressure: To be adjusted during commissioning with a specified differential pressure *) to engine inlet connection 1. *) Admissible pressure range has to be determined by flow measurement during seatrial of the first vessel of a ship series to ensure the required flow distribution between liner and cover. - Cooling water (freshwater) has to be treated according to WinGD's specification.
H	3	OUTLET - Cylinder cooling water (HT water) - Cooling water temperature set point: 90 °C Controller set-point: 90 °C (controller type: PI) Steady state condition: 90 ± 2 °C Transient condition: 90 ± 4 °C - A venting device (air separator) must be installed as close as possible after the outlet connection to remove accumulated air from the system
H	7	INLET - Scavenge air cooler (SAC) cooling water (LT water) - Cooling water pressure: 2.0 - 4.0 bar - Cooling water temperature: 10 - 36 °C - Cooling water volume flow: according to GTD specification. - Cooling water (freshwater) has to be treated according to WinGD's specification. - LT cooling water amount on engine side: Given in table1 on page 2
H	8	OUTLET - Scavenge air cooler (SAC) cooling water (LT water) - Cooling water volume flow: according to GTD specification. adjusted by an orifice in the outlet pipe on shipside.

QTY	SEQ NO	Material ID	Material Name / Dimension, Occ	Standard or Drawing	Basic Material / Material Standard	Weight GR./NET
1	029	PAAD297120	AIR SEPARATOR	DAAD101945		0,001
1	021	107.245.419.500	EXPANSION TANK	107.245.419		0,001
1	020	107.245.626.500	BUFFER	107.245.626		0,001

Approved

Free space for lic.

Q-Code: XXXXX
Standard: ISO; JIS
Main Drw.

Modif.	Number	Drawn date	Number	Drawn date	Number	Drawn date	Number	Drawn date
E	EAAD087864	22.09.2017	F EAAD089971	25.11.2018	G EAAD090593	29.08.2019	H EAAD092431	28.02.2020

WIN GD Winterthur Gas & Diesel

Product: 5-8X62

CENTRAL COOLING WATER SYSTEM
HT_static-pressure: Buffer-unit
Zentralkuehlwassersystem

Units: mm kg | NX | Basic Material | Net Weight 0,001

SURFACE PROTECTION SEE GROUP 0344	Made	11.09.2012	asex06	A.Sekulic	Scale -	Size A2	Page 1/2	Material ID PAAD099745
TOLERANCING PRINCIPLE ISO8015	Chkd	30.11.2012	sfe006	Feuerstein	Design Group 9721	Drawing ID DAAD031234	Rev. H
GENERAL TOLERANCES ACCORDING TO ISO2768-mK	Appd	30.11.2012	wwr001	Wroblewski			

DID - DIMENSIONAL DRAWING - Confidential

Copyright Winterthur Gas & Diesel Ltd. All rights reserved. By taking possession of the drawing the recipient recognizes and honours these rights. Neither the whole nor any part of this drawing may be used in any way for construction, fabrication, marketing or any other purpose nor copied in any way nor made accessible to third parties without the previous written consent of Winterthur Gas & Diesel Ltd.

SYSTEM PROPOSAL

Pos.	ENGINE CONNECTIONS *2) (H)
1	INLET - Cylinder cooling water (HT water)
2	INLET - Cylinder liner cooling water
3	OUTLET - Cylinder cooling water (HT water)
7	INLET - Scavenge air cooler (SAC) cooling water (LT water) *7)
8	OUTLET - Scavenge air cooler (SAC) cooling water (LT water) *7)

Pos.	ENGINE COMPONENTS *3)
EC01	Scavenge air cooler (SAC)
EC02	Butterfly valve cover inlet
EC03	Butterfly valve liner inlet
(H) EC04	Manual vent valve, for each cylinder *16)

Number of cylinders			5	6	7	8
Main engine X62 (R1+ rated)	power	(kW)	13300	15960	18620	21280
	speed	(rpm)	103 (H)			
Buffer unit for HT circuit	Cap.	(m^3)	0.8	0.8	0.8	0.8
Cylinder cooling water feed tank only min.	Cap.	(m^3)	1.5	1.5	1.5	1.5
CCW feed and drain tank (combined) min.	Cap.	(m^3)	4	4	4	4
Cooling water expansion tank (LT)	Cap.	(m^3)	Depending on ancillary plants			

PROPOSAL for pipe dimensioning *11)

(H) Nominal pipe diameter						
	A	DN	Yard determination, suitable for main engine and ancillary plants			
	B	DN				
	C	DN				
	D	DN	200	250	250	250
	E	DN	125	150	150	150
	F	DN	125	150	150	150
	G	DN	125	125	150	150
	H	DN	65	65	65	80
	I	DN	32	32	32	32
	J	DN	65	65	65	65
	K	DN	20	20	20	20

Pos.	SYSTEM COMPONENTS *1)
001	Low sea chest
002	High sea chest
003	Seawater strainer
004	Air vent (air vent pipe or equal venting system acc. to shipyard's design)
005	Seawater circulating pump
006	Central cooler (LT cooling water) (H)
007	Automatic temperature control valve for LT circuit *13)
008	LT water temperature sensor *13)
009	Cooling water pump for LT circuit
010	Lubricating oil cooler
011	Automatic temperature control valve for HT circuit *14)
012	HT water temperature sensor *14)
013	Cylinder cooling water pump for HT circuit
014	Pre-heating circulating pump (optional), cap. 10% from cylinder cooling pump *8)
015	Pre-heater for main engine (HT circuit)
016	Solenoid valve (air inlet to be interlocked with min. water level)
017	Control air valve with air release function *15) (to be adjusted to ensure CW pressure at ME inlet 4 - 5 bar(g))
018	Throttling disc *5)
019	Freshwater generator
020	Buffer unit for HT circuit (link to detail drawing on page 1)
021	LT water expansion tank (link to detail drawing on page 1) *18) (H)
022	Filling pipe / inlet chemical treatment
023	Cylinder cooling water feed & drain tank (or feed tank only)
024	Cylinder cooling water cooler
025	Supply pump, automatic level control (0.5 m^3/h at 4 bar)
026	Chemical treatment refill unit *4)
027	Transition piece (adapter) *9)
028	MDO/MGO cooler
029	Air separator (link to detail drawing on page 1) (H)
030	Automaic venting unit (H)

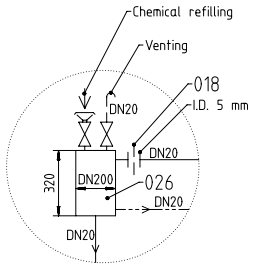

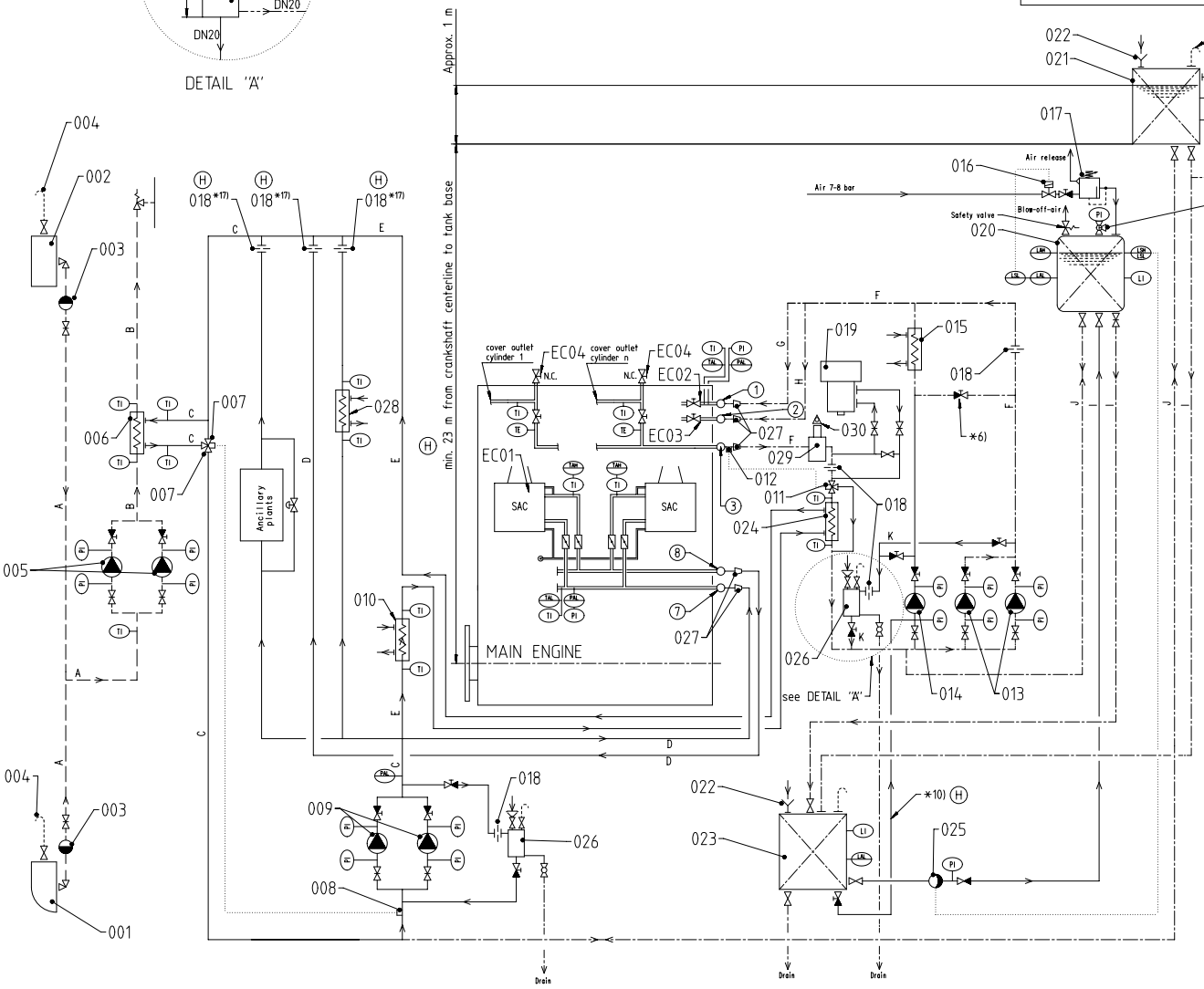

(H)

Table 1: Water content on engine side

Cylinder	HT circuit Cyl. C.W. Volume (l)	LT circuit SAC Volume (l)
5	650 l	600 l a)
6	775 l	600 l a) / 1050 l b)
7	925 l	700 l a) / 1300 l b)
8	1050 l	700 l a) / 1400 l b)

a) Values for executions with 1 scavenge air cooler.
b) Values for executions with 2 scavenge air coolers.

Seawater pipes
LT freshwater pipes
HT freshwater pipes
Balance pipes
Ancillary equipment pipes
Drain/overflow pipes
Air vent pipes
Control/feed back
Pipes on Engine
Pipe connections

Remarks: (H)

- Air vent and drain pipes not shown on drawing. Shall be installed where required.
- Air vent and drain pipes must be fully functional at all inclination angles of the ship at which the engine must be operational.

*1) To be delivered by external supplier and to be installed by the shipyard.
*2) Refer to the "Pipe Connection Plan" for the execution and location of the engine pipe connection.
*3) To be delivered by the engine manufacturer, i.e. already equipped on engine side.
*4) To be installed for cooling water after-treatment during regular engine operation. Convenient dimensions are provided in view "A". Other designs are possible.
*5) When using a valve, lock in proper position to avoid mishandling.
*6) Only when pos. 014 is installed.
*7) The inlet and outlet pipes to SAC must be designed to allow engine thermal expansion, or be fitted with expansion pieces.
*8) For guidance only, final layout according to actual engine pre-heating requirements.
*9) Installed as required (check with "Pipe Connection Plan")
*10) Optional filling line to enable fast system re-filling (e.g. after a complete system drainage) by means of the pre-heating pumps.
*11) All given diameters are valid for the mentioned rating and serve just as an example. To make the layout for the project specific rating please refer to DG9730 "Fluid velocities and flow rates, recommended values for pipework of diesel plants" for selecting the appropriate pipe diameter. Rating specific flow rates are provided by GTD.
*13) A constant temperature at engine inlet must be maintained. Temperature set-point can be selected between 10 - 36 °C. WinGD recommends a set-point of 25 °C. A lower LT water temperature assists the main engine to reach lower BSFC. If the ancillary plants require a temperature lower or greater than the LT water set-point, a separate water supply system with different temperature set-point has to be installed (please refer to the system proposal in MIM)
*14) A constant temperature at engine outlet must be maintained. Required controller set-point for main engine operation is 90 °C.
*15) If the selected control air valve does not have the integrated air release functionality a separate air release valve can be installed as alternative on the top of the buffer unit.
*16) Only to be used for manual venting of isolated cylinders after maintenance. To be kept close during engine operation.
*17) Optional, only to be installed if needed for hydraulic balancing.
*18) If gas driven auxiliaries are connected to the LT circuit, the LT expansion tank must be gas tight and has to be vented to a safe area outside of engine room.

Modif.	Number	Drawn date	Number	Drawn date	Number	Drawn date	Number	Drawn date
E	EAAD087864	22.09.2017	F EAAD089971	25.11.2018	G EAAD090593	29.08.2019	H EAAD092431	28.02.2020

Free space for lic.
Q-Code XXXXX
Standard ISO; JIS
Main Drw.

WinGD Winterthur Gas & Diesel

Product 5-BX62

CENTRAL COOLING WATER SYSTEM
HT_static-pressure: Buffer-unit
Zentralkuehlwassersystem

Units mm kg	NX	Basic Material		Net Weight 0,001	
SURFACE PROTECTION SEE GROUP 0344	Made 11.09.2012 asex06	A.Sekulic	Scale -	Size A1	Page 2/2
TOLERANCING PRINCIPLE ISO8015	Chkd 30.11.2012 sfe006	Feuerstein	Design Group 9721	Material ID PAAD099745	
GENERAL TOLERANCES ACCORDING TO ISO2768-mK	Appd 30.11.2012 wwr001	Wroblewski	Drawing ID DAAD031234	Rev. H	

DIM - DIMENSIONAL DRAWING - Confidential

Approved

Copyright Winterthur Gas & Diesel Ltd. All rights reserved. By taking possession of the drawing the recipient recognizes and honours these rights. Neither the whole nor any part of this drawing may be used in any way for construction, fabrication, marketing or any other purpose nor copied in any way nor made accessible to third parties without the previous written consent of Winterthur Gas & Diesel Ltd.

Tank Proposal (F)

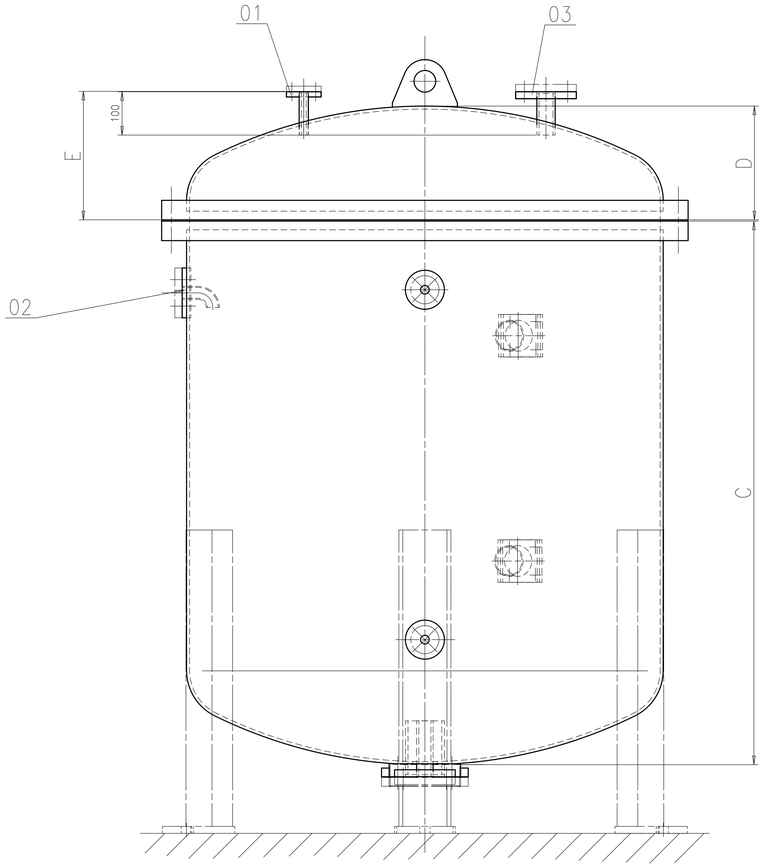

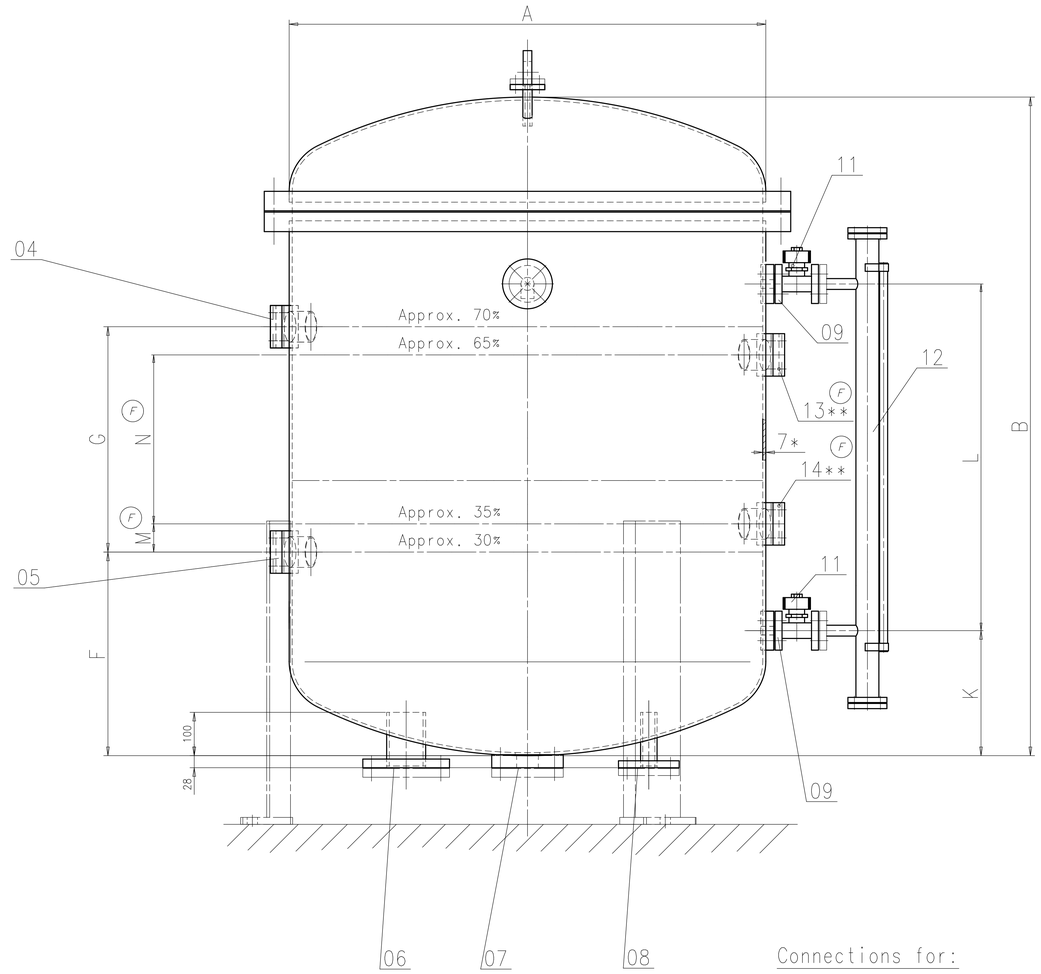

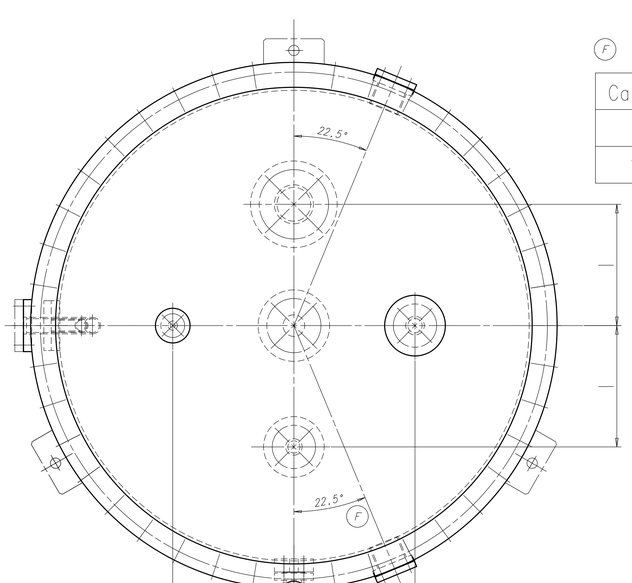

(F)

Capacity	A	B	C	D	E	F	G	H	I	K	L	M	N
800l	ø900	1430	1205	222	250	455	520	600	250	250	800	65	390
1200l	ø1100	1520	1255	262	300	470	520	650	280	290	800	65	390

Connections for:

01 Compressed air supply from control air valve, DN15 with blank flange
02 Pressure indicator, DN25 with blank flange
03 Safety and relief valve adjustment 5,5 bar DN32 with blank flange
04 Level alarm high, with blank flange
05 Level alarm low, with blank flange
06 Compensation, DN80 with blank flange
07 Drain, DN32 with blank flange
08 Feed, DN32 with blank flange
09 Flanges for level indicator
(F) 11 Valve for level indicator, self-closing type
12 Level indicator
13 Level switch high, with blank flange **
14 Level switch low, with blank flange **

Working pressure : 5 bar
* Wall thickness and test pressure : according to relevant classification society/rules
Service temperature : max. 95°C
(F) ** Tank volume between LSH and LSL shall be no less than 150 litres.

Drawn for 1200l capacity

Basic	Free space for ISO	Number	Drawn date	Number	Drawn date	Number	Drawn date	Number	Drawn date
		C 7-61.644	05.03.2008	D EAA0084051	14.08.2012	E EAA0085172	22.04.2014	F EAA0087035	12.10.2016

Q-Code XXXXX Standard ISO Main Drw.

WIN GD Winterthur Gas & Diesel

Product W-2S

BUFFER
TO CYL.COOLING WATER SYS
Puffer

Units mm kg | IDE | Basic Material | Net Weight 0.001

SURFACE PROTECTION SEE GROUP 0344	Mode	22.09.00	S.STYLIANOU	Scale 1:5	Size A0	Page 1/1	Material ID 107.245.626.500
TOLERANCING PRINCIPLE ISO8015	Chkd			Design Group 9721			
GENERAL TOLERANCES ACCORDING TO ISO2768-mK	Appd	22.09.2000	WCH001 Service User				Drawing ID 107.245.626 Rev. F

Approved

ORIGINAL DRAWING - CONFIDENTIAL

Copyright Winterthur Gas & Diesel Ltd. All rights reserved. By taking possession of the drawing the recipient recognizes and honours these rights. Neither the whole nor any part of this drawing may be used in any way for construction, fabrication, marketing or any other purpose nor copied in any way nor made accessible to third parties without the previous written consent of Winterthur Gas & Diesel Ltd.

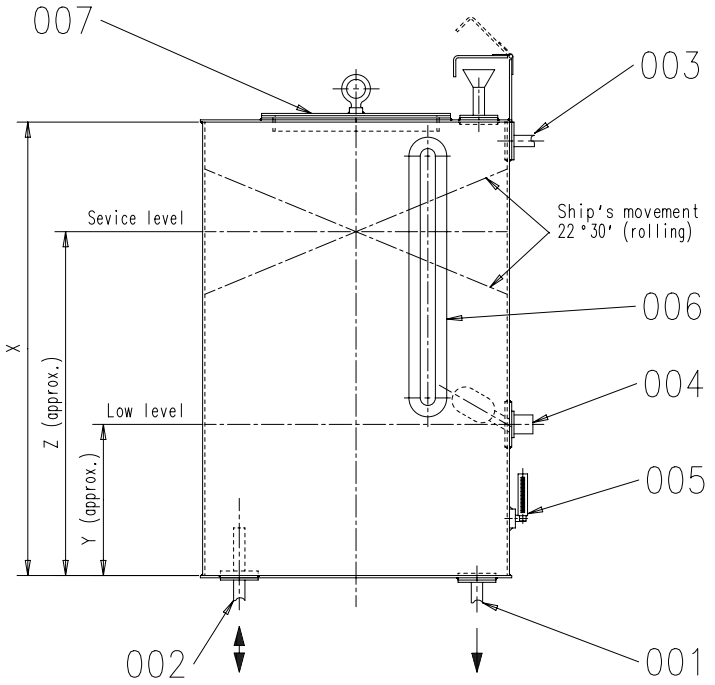

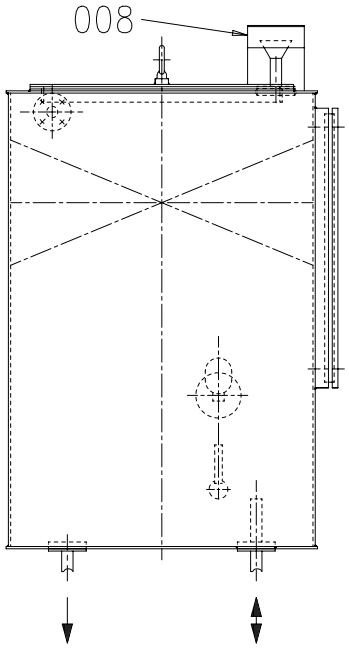

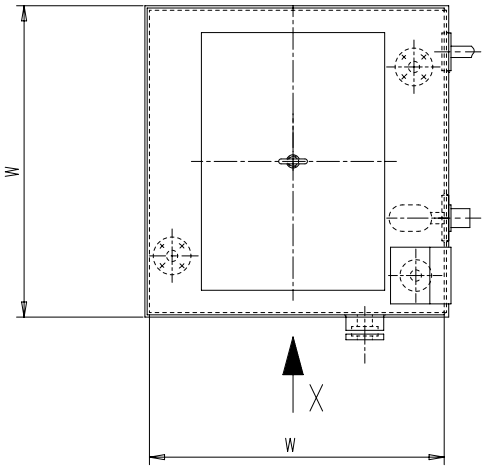

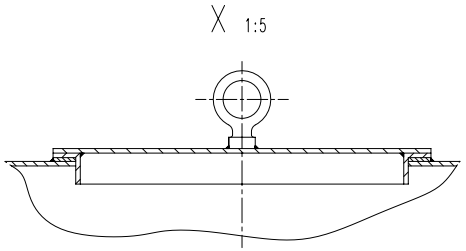

Drawn for 0.75 m^3 capacity

Pos.	Description (D)
001	Drain
002	Balance pipe from LT circuit
003	Overflow/air vent
004	Low level alarm
005	Thermometer
006	Level indicator *1)
007	Inspection cover *2)
008	Filling pipe/inlet chemical treatment *2)

Remarks:

*1) Level indicator can be omitted if an alternative is fitted.
*2) Other designs like hinged covers, etc. are also possible

- For required tank capacity and pipe diameters refer to drawing 'Central cooling water system'

Table 1: Tank dimensions

LT tank capacity	W	X	Y	Z
(m^3)	(mm)	(mm)	(mm)	(mm)
0.5	800	800	330	640
0.75	800	1200	500	960
1.0	800	1600	670	1280
1.25	1000	1250	530	1000
1.5	1000	1500	630	1200
1.75	1000	1750	730	1400
2.0	1000	2000	830	1600

Free space for lic.

Q-Code XXXXX
Standard ISO; JIS
Main Drw.

Modif.	Number	Drawn date	Number	Drawn date	Number	Drawn date	Number	Drawn date
A	EAAD014356	16.06.1997	B 7-37.090	16.08.2007	C EAAD083145	25.01.2012	D EAAD091029	12.09.2019

WIN GD Winterthur Gas & Diesel

Product W-2S

EXPANSION TANK
CENTRAL COOLING WATER LT CIRCUIT
Ausgleichstank
Zentralkuehlwassersystem LT

Units mm kg | NX | Basic Material | Net Weight 0,001

SURFACE PROTECTION SEE GROUP 0344	Made 11.06.1997 T.LANDERT	Scale 1:10	Size A2	Page 1/1	Material ID 107.245.419.500
TOLERANCING PRINCIPLE ISO8015	Chkd	Design Group 9721	Drawing ID 107.245.419		Rev. D
GENERAL TOLERANCES ACCORDING TO ISO2768-mK	Appd 11.06.1997 WCH001 Service User				

Approved

DID - DIMENSIONAL DRAWING - Confidential

Copyright Winterthur Gas & Diesel Ltd. All rights reserved. By taking possession of the drawing the recipient recognizes and honours these rights. Neither the whole nor any part of this drawing may be used in any way for construction, fabrication, marketing or any other purpose nor copied in any way nor made accessible to third parties without the previous written consent of Winterthur Gas & Diesel Ltd.

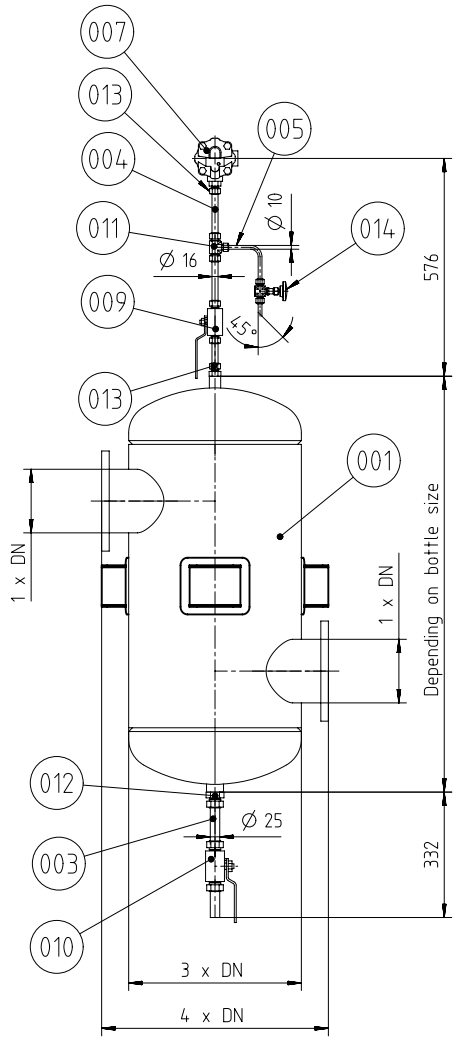

PIPE LENGTHS TO BE DECIDED BY SHIPYARD

QTY	SEQ NO	Material ID	Material Name / Dimension, Occ	Standard or Drawing	Basic Material / Material Standard	Weight GR./NET
1	014	107.324.704.001	NEEDLE VALVE DN7	107.324.704	Steel	0,438
2	013	107.324.101.017	SCREW-IN UNION DN12xG1/2	107.324.101	Steel	0,125
1	012	107.324.101.021	SCREW-IN UNION DN20xG1	107.324.101	Steel	0,329
1	011	107.324.131.007	TEE UNION DN12 x DN7	107.324.131	Steel	0,25
1	010	107.324.703.005	BALL VALVE DN20	107.324.703	Steel	1,24
1	009	107.324.703.003	BALL VALVE DN12	107.324.703	Steel	
1	007	PAAD185947	AUTOMATIC VENTING UNIT Rp1/2	DAAD065150		2,5
1m	005	005.405.131.043	PIPE DN7 / 10 x 1.5		W-FU-235-N-T	0,31
1m	004	005.405.131.087	PIPE DN12 / 16 x 2		W-FU-235-N-T	0,69
0,25m	003	005.405.131.131	PIPE DN20 / 25 x 2		W-FU-235-N-T	1,13
1	001	PAAD297112	AIR SEPARATOR	DAAD101890		139

Approved

Free space for lic.

Q-Code: XXXXX

Standard: ISO; JIS

Main Drw.

Modif.	Number	Drawn date	Number	Drawn date	Number	Drawn date	Number	Drawn date
A	EAAD090871	26.09.2019	B EAAD096344	10.03.2021				

WIN GD Winterthur Gas & Diesel

Product: W-2S

AIR SEPARATOR

Units: mm kg | NX | Basic Material | Net Weight 0.001

Made	06.06.2018 Kashyap Patel	Scale 1:10	Size A2	Page 1/1	Material ID PAAD297120
Chkd	17.07.2018 wwa008 Wang	Design Group 9721	Drawing ID DAAD101945		Rev. B
Appd	17.07.2018 mhu019 Hug				

SURFACE PROTECTION SEE GROUP 0344

TOLERANCING PRINCIPLE ISO8015

DID - DIMENSIONAL DRAWING - Confidential

TOLERANCE GRADES

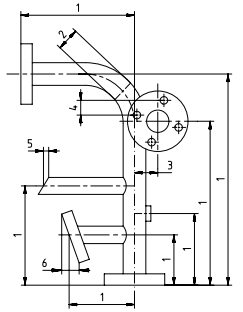

TOL. GRADE	DIMENSION NO. 1	2	3	4	5	6	
A	±1.0	*	±2.0	±2.0	±0.5	±0.5	≤DN150
B	±3.0	*	±3.0	±2.0	±0.5	±0.5	
C	±6.0	*	±3.0	±2.0	±0.5	±0.5	
A	±2.0	*	±2.0	±2.0	±1.0	±1.0	>DN150
B	±4.0	*	±3.0	±3.0	±1.0	±1.0	
C	±6.0	*	±3.0	±3.0	±1.0	±1.0	

* for these tolerances see chapter 2.2 of the piping instruction 4-107.354.915

Rohrklasse PIPE CLASS	III	Medium MEDIUM	Wasser WATER	Pruefueberdruck TEST OVERPRESSURE	7.5	bar
Schweiss Qualitaet WELDING QUALITY LEVEL	D	Toleranzklasse TOLERANCE GRADE	B	Betr.druck OPER. PRESS.	5	bar

Copyright Winterthur Gas & Diesel Ltd. All rights reserved. By taking possession of the drawing the recipient recognizes and honours these rights. Neither the whole nor any part of this drawing may be used in any way for construction, fabrication, marketing or any other purpose nor copied in any way nor made accessible to third parties without the previous written consent of Winterthur Gas & Diesel Ltd.

AIR SEPARATOR PROPOSAL

SECTION H-H
SCALE 1:2

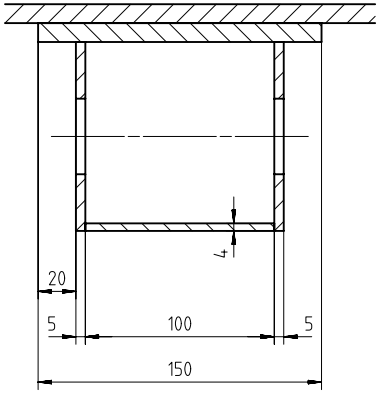

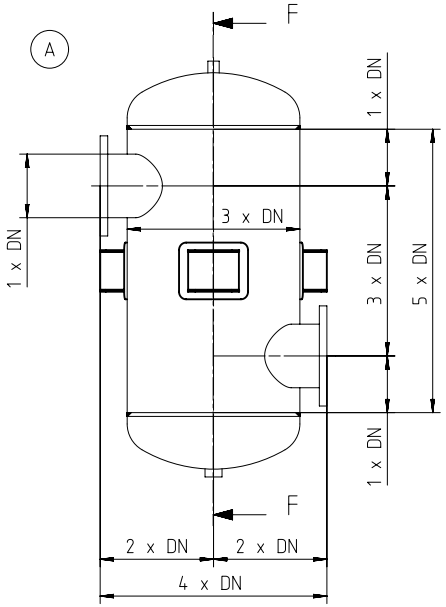

ISO

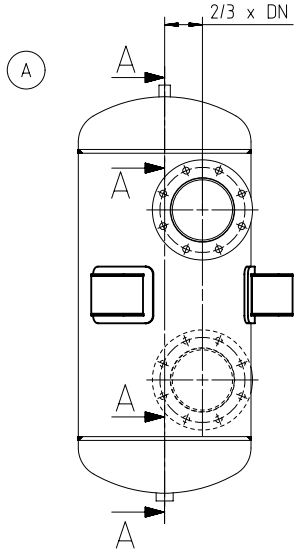

SECTION A-A
SCALE 1:5

JIS

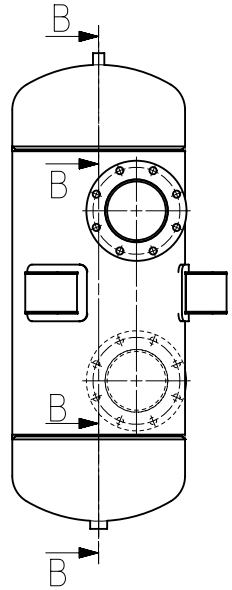

SECTION B-B
SCALE 1:5

DETAIL G
SCALE 1:2

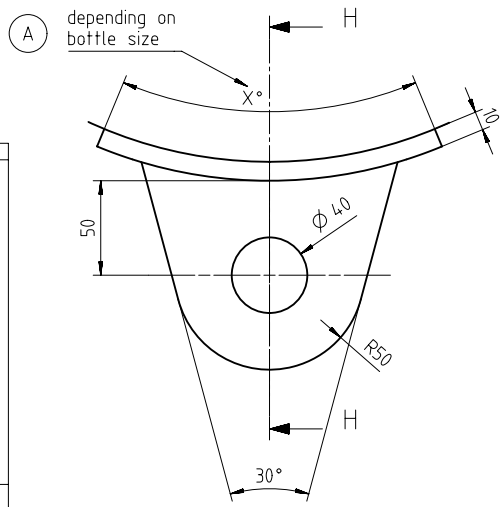

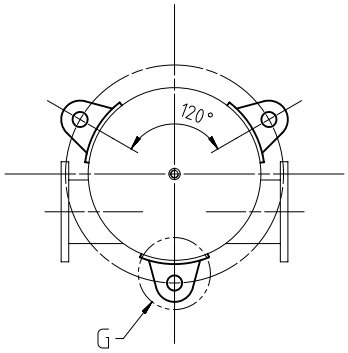

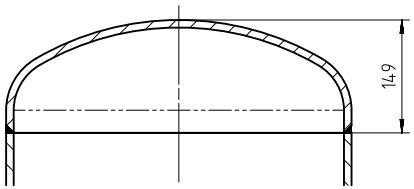

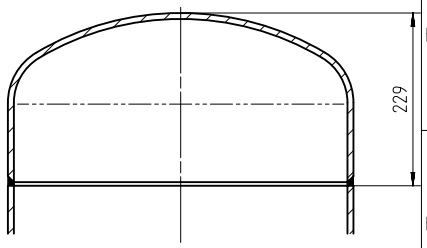

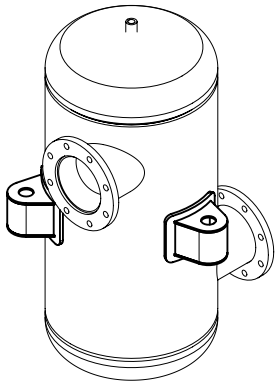

Qualitaetsstufe D (siehe 4-107.345.444)
WELD QUALITY LEVEL D (SEE 4-107.345.444)

TOLERANCE GRADES

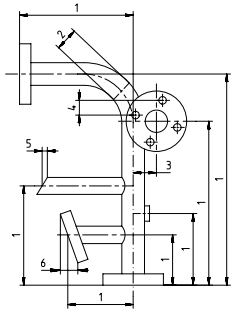

TOL. GRADE	DIMENSION NO. 1	2	3	4	5	6	
A	±1.0	*	±2.0	±2.0	±0.5	±0.5	≤DN150
B	±3.0	*	±3.0	±2.0	±0.5	±0.5	
C	±6.0	*	±3.0	±2.0	±0.5	±0.5	
A	±2.0	*	±2.0	±2.0	±1.0	±1.0	>DN150
B	±4.0	*	±3.0	±3.0	±1.0	±1.0	
C	±6.0	*	±3.0	±3.0	±1.0	±1.0	

* for these tolerances see chapter 2.2 of the piping instruction 4-107.354.915

Rohrklasse PIPE CLASS	III	Medium MEDIUM	Wasser WATER	Pruefueberdruck TEST OVERPRESSURE		7.5	bar
Schweiss Qualitaet WELDING QUALITY LEVEL	D	Toleranzklasse TOLERANCE GRADE	B	Betr.druck OPER. PRESS.		5	bar

SURFACE PROTECTION SEE GROUP 0344
TOLERANCING PRINCIPLE ISO8015

Free space for lic.

Q-Code: XXXXX
Standard: ISO; JIS
Main Drw.

Modif.	Number	Drawn date	Number	Drawn date	Number	Drawn date	Number	Drawn date
A	EAAD090871	09.09.2019						

WIN GD Winterthur Gas & Diesel

Product: W-2S

AIR SEPARATOR

Units mm kg	NX	Basic Material			Net Weight 0.001
Made 05.06.2018 Kashyap patel		Scale 1:10	Size A2	Page 1/1	Material ID PAAD297112
Chkd 17.07.2018 wwa008 Wang		Design Group 9721	Drawing ID DAAD101890		Rev. A
Appd 17.07.2018 mhu019 Hug					

Approved

DID - DIMENSIONAL DRAWING - Confidential

Copyright Winterthur Gas & Diesel Ltd. All rights reserved. By taking possession of the drawing the recipient recognizes and honours these rights. Neither the whole nor any part of this drawing may be used in any way for construction, fabrication, marketing or any other purpose nor copied in any way nor made accessible to third parties without the previous written consent of Winterthur Gas & Diesel Ltd.

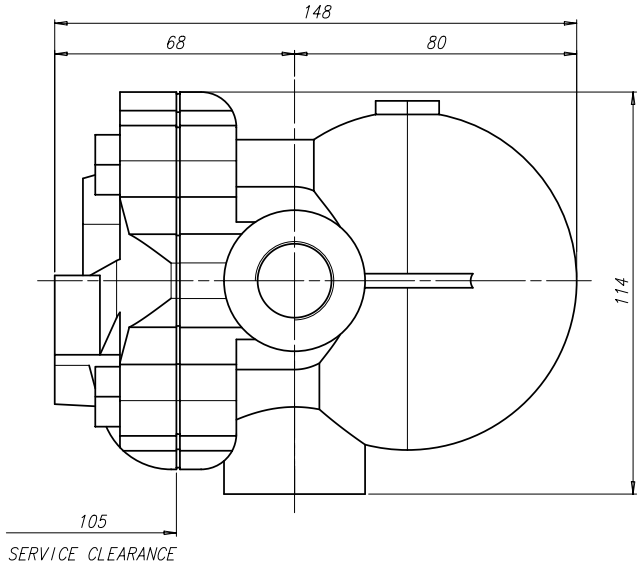

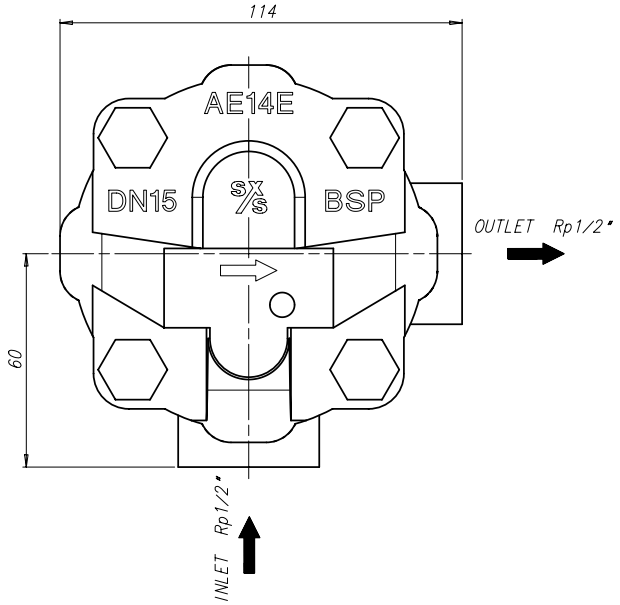

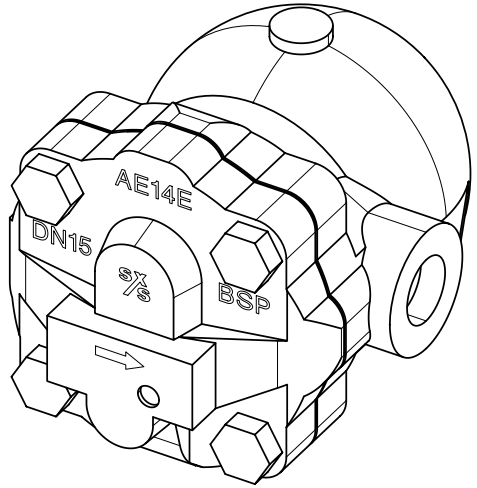

SUPPLIER:

SPIRAX SARCO AG

www.SpiraxSarco.com

SPECIFICATIONS:

AUTOMATIC AIR VENT SPIRAX SARCO TYPE AE14E, PN16, SIZE Rp1/2"

PRESSURE LEVEL :	PN16
MAX. OPERATING PRESSURE (PMO):	14 bar
MAX. OPERATING TEPERATURE (TMO):	127° C
MAX. PRESSURE DIFFERENCE:	14 bar

Free space for lic.

Q-Code XQXXX

Standard ISO JIS

Main Drw.

Approved

Modif.	Number	Drawn date	Number	Drawn date	Number	Drawn date	Number	Drawn date

WIN GD Winterthur Gas & Diesel

Product W-2S

AUTOMATIC VENTING UNIT
ORDER DRAWING
Entlueftungsautomat
Bestellzeichnung

Units mm kg | IDE | Basic Material | Net Weight 2.5

SURFACE PROTECTION SEE GROUP 0344	Made	08.04.2015 Aditya Gole	Scale 1:1	Size A2	Page 1/1	Material ID PAAD185947
TOLERANCING PRINCIPLE ISO8015	Chkd	27.05.2015 ast044 Stephan	Design Group 8611	Drawing ID DAAD065150		Rev. –
GENERAL TOLERANCES ACCORDING TO ISO2768-mK	Appd	27.05.2015 bha009 Haag				

DID - DIMENSIONAL DRAWING - Confidential

Copyright Winterthur Gas & Diesel Ltd. All rights reserved. By taking possession of the drawing the recipient recognizes and honours these rights. Neither the whole nor any part of this drawing may be used in any way for construction, fabrication, marketing or any other purpose nor copied in any way nor made accessible to third parties without the previous written consent of Winterthur Gas & Diesel Ltd.

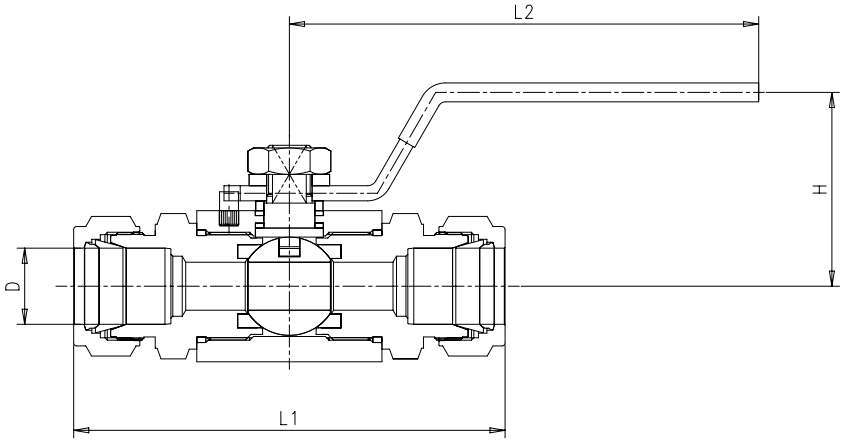

Artikel Nummer	DN	TUBE D	L1	L2	H	MAX. WORKING PRESSURE	OPERATING TEMPERATURE (°C)	Seat Material
107.324.703.001	DN07	10	104.91	108.75	38.41	6000 (413bar)	-30 to +180	PCTFE
107.324.703.002	DN09	12	109.71	108.75	38.41			
107.324.703.003	DN12	16	114.96	124.2	51.3			
107.324.703.004	DN15	20	114.16	124.2	53.1			
107.324.703.005	DN20	25	134.08	149.2	58.1			

siehe Hauptzeichnung für Spezifikation
SEE MAIN DRAWING FOR SPECIFICATION

QTY	SEQ NO	Material ID	Material Name / Dimension, Occ	Standard or Drawing	Basic Material / Material Standard	Weight GR./NET
1	005	107.324.703.005	BALL VALVE DN20	107.324.703	Steel	1,24
1	004	107.324.703.004	BALL VALVE DN15	107.324.703	Steel	1,03
1	003	107.324.703.003	BALL VALVE DN12	107.324.703	Steel	0,55
1	002	107.324.703.002	BALL VALVE DN9	107.324.703	Steel	0,511
1	001	107.324.703.001	BALL VALVE DN7	107.324.703	Steel	0,494

Free space for lic.

Q-Code: XXXXX
Standard: ISO; JIS
Main Drw.

Modif.	Number	Drawn date	Number	Drawn date	Number	Drawn date	Number	Drawn date
A	EAAD700077	13.04.2011	B EAAD083575	01.10.2012	C EAAD096344	12.03.2021		

WIN GD Winterthur Gas & Diesel

Product: W-2S

BALL VALVE

Kugelhahn

Units: mm kg | NX | Basic Material | Net Weight

SURFACE PROTECTION SEE GROUP 0344	Made	29.04.2005 sga006 S.GASSER	Scale 1:1	Size A2 / Page 1/1	Material ID
TOLERANCING PRINCIPLE ISO8015	Chkd	S.Gasser	Design Group 0333	Drawing ID 107.324.703	Rev. C
GENERAL TOLERANCES ACCORDING TO ISO2768-mK	Appd	04.05.2005 MFR001 Frei			

Approved

DID - DIMENSIONAL DRAWING - Confidential

Copyright Winterthur Gas & Diesel Ltd. All rights reserved. By taking possession of the drawing the recipient recognizes and honours these rights. Neither the whole nor any part of this drawing may be used in any way for construction, fabrication, marketing or any other purpose nor copied in any way nor made accessible to third parties without the previous written consent of Winterthur Gas & Diesel Ltd.

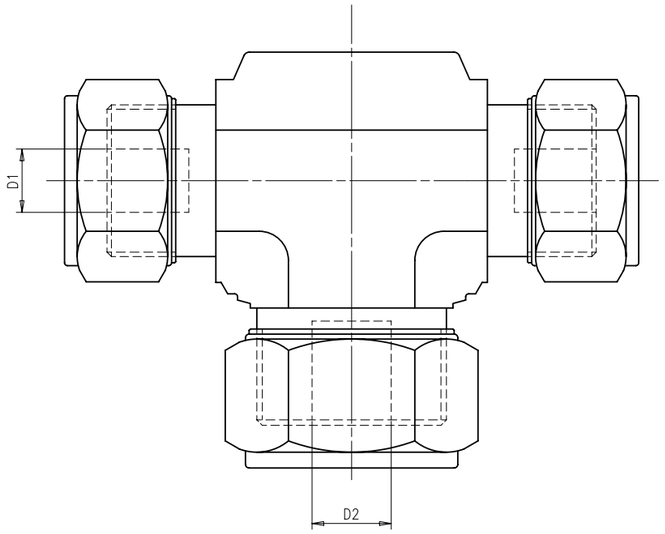

Artikel Nummer	DN	TUBE D1	TUBE D2
107.324.131.001	DN07	10	6
107.324.131.002	DN09	12	8
107.324.131.003	DN09	12	10
107.324.131.004	DN09	12	16
107.324.131.005	DN12	16	6
107.324.131.006	DN12	16	8
107.324.131.007	DN12	16	10
107.324.131.008	DN12	16	12
107.324.131.009	DN12	16	20
107.324.131.010	DN15	20	10
107.324.131.011	DN15	20	12
107.324.131.012	DN15	20	16
107.324.131.013	DN15	20	25
107.324.131.014	DN20	25	16
107.324.131.015	DN20	25	20

Ⓑ *siehe Hauptzeichnung für Spezifikation*
SEE MAIN DRAWING FOR SPECIFICATION

QTY	SEQ NO	Material ID	Material Name	Dimension/Occ.Dimension	Standard or Drawing	Basic Material / Material Standard	Weight GR./NET
1	015	107.324.131.015	TEE UNION	25 x 20 x 25	107.324.131	Steel / Steel	0.642
1	014	107.324.131.014	TEE UNION	25 x 16 x 25	107.324.131	Steel / Steel	0.615
1	013	107.324.131.013	TEE UNION	20 x 25 x 20	107.324.131	Steel / Steel	0.592
1	012	107.324.131.012	TEE UNION	20 x 16 x 20	107.324.131	Steel / Steel	0.471
1	011	107.324.131.011	TEE UNION	20 x 12 x 20	107.324.131	Steel / Steel	0.443
1	010	107.324.131.010	TEE UNION	20 x 10 x 20	107.324.131	Steel / Steel	0.46
1	009	107.324.131.009	TEE UNION	16 x 20 x 16	107.324.131	Steel / Steel	0.442
1	008	107.324.131.008	TEE UNION	16 x 12 x 16	107.324.131	Steel / Steel	0.262
1	007	107.324.131.007	TEE UNION	16 x 10 x 16	107.324.131	Steel / Steel	0.25
1	006	107.324.131.006	TEE UNION	16 x 8 x 16	107.324.131	Steel / Steel	0.243
1	005	107.324.131.005	TEE UNION	16 x 6 x 16	107.324.131	Steel / Steel	0.241
1	004	107.324.131.004	TEE UNION	12 x 16 x 12	107.324.131	Steel / Steel	0.271
1	003	107.324.131.003	TEE UNION	12 x 10 x 12	107.324.131	Steel / Steel	0.195
1	002	107.324.131.002	TEE UNION	12 x 8 x 12	107.324.131	Steel / Steel	0.19
1	001	107.324.131.001	TEE UNION	10 x 6 x 10	107.324.131	Steel / Steel	0.127

Free space for Lic.

Q-Code XXXXX
Standard ISO JIS
Main Drw.

Modif.	Number	Drawn date	Number	Drawn date	Number	Drawn date	Number	Drawn date
A	EAAD700021	13.01.2011	B EAAD083575	24.02.2012				

WIN GD
Winterthur Gas & Diesel

Product
W-2S

TEE UNION

T-Verschraubung

Units mm kg | IDE | Basic Material | Net Weight

SURFACE PROTECTION SEE GROUP 0344	Made	17.12.2004 W.DOERIG	Scale 1:1	Size A1	Page 1/1
TOLERANCING PRINCIPLE ISO8015	Chkd		Design Group 0333	Drawing ID 107.324.131	Rev. B
GENERAL TOLERANCES ACCORDING TO ISO2768-mK	Appd	*28.04.2005 mfr001 Frei*			

Material ID

Approved

D10 – DIMENSIONAL DRAWING – Confidential

Copyright Wärtsilä. All rights reserved. By taking possession of the drawing the recipient recognizes and honours these rights. Neither the whole nor any part of this drawing may be used in any way for construction, fabrication, marketing or any other purpose nor copied in any way nor made accessible to third parties without the previous written consent of Wärtsilä.

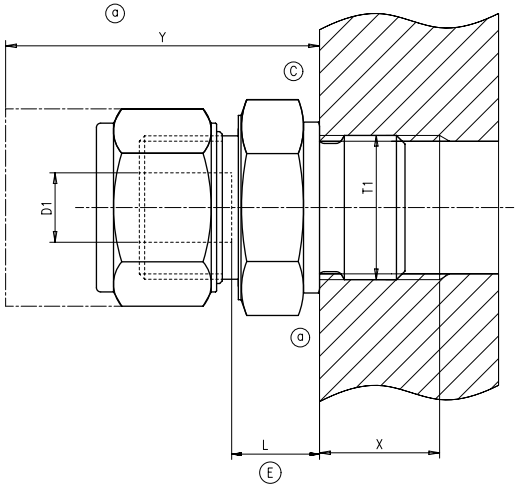

	Material ID	DN	TUBE D1	T1	X	Y (a)	L	Order Number (E)
	107.324.101.001	DN04	6	G1/8	9	45	9.9	DMC 6M-2GB-C
a	107.324.101.002	DN04	6	G1/4	14	50	11.1	DMC 6M-4GB-C
	107.324.101.003	DN04	6	G3/8	14	50	12.4	DMC 6M-6GB-C
	107.324.101.004	DN04	6	G1/2	17	55	15.2	DMC 6M-8GB-C
	107.324.101.005	DN06	8	G1/8	9	45	9.9	DMC 8M-2GB-C
a	107.324.101.006	DN06	8	G1/4	14	50	11.1	DMC 8M-4GB-C
	107.324.101.007	DN06	8	G3/8	14	50	12.4	DMC 8M-6GB-C
	107.324.101.008	DN06	8	G1/2	17	55	15.2	DMC 8M-8GB-C
	107.324.101.009	DN07	10	G1/4	14	50	11	DMC 10M-4GB-C
a	107.324.101.010	DN07	10	G3/8	14	50	12.2	DMC 10M-6GB-C
	107.324.101.011	DN07	10	G1/2	17	60	15.1	DMC 10M-8GB-C
	107.324.101.012	DN09	12	G1/4	14	55	8.6	DMC 12M-4GB-C
a	107.324.101.013	DN09	12	G3/8	14	55	9.1	DMC 12M-6GB-C
	107.324.101.014	DN09	12	G1/2	17	60	12	DMC 12M-8GB-C
	107.324.101.015	DN09	12	G3/4	19	65	14.3	DMC 12M-10GB-C
	107.324.101.016	DN12	16	G3/8	14	55	8.3	DMC 16M-6GB-C
a	107.324.101.017	DN12	16	G1/2	17	60	10.4	DMC 16M-8GB-C
	107.324.101.018	DN15	20	G1/2	17	65	10.3	DMC 20M-8GB-C
	107.324.101.019	DN15	20	G3/4	19	65	11.1	DMC 20M-12GB-C
	107.324.101.020	DN20	25	G3/4	19	70	10.5	DMC 25M-12GB-C
a	107.324.101.021	DN20	25	G1	21	70	10.5	DMC 25M-16GB-C
b	107.324.101.022	DN20	25	G1 1/4	23	75	12.9	DMC 25M-20GB-C
b	107.324.101.023	DN20	25	G1 1/2	25	80	14.5	DMC 25M-24GB-C

Drawn for Dk-Lok
Material: Steel
PN needs to meet the working pressure of Dk-Lok products. (E)

(D) *siehe Hauptzeichnung für Spezifikation*
SEE MAIN DRAWING FOR SPECIFICATION

QTY	SEQ NO	Material ID	Material Name / Dimension, Occ	Standard or Drawing	Basic Material / Material Standard	Weight GR./NET
1	023	107.324.101.023	SCREW-IN UNION 25xG1 1/2	107.324.101	Steel	0,733
1	022	107.324.101.022	SCREW-IN UNION 25xG1 1/4	107.324.101	Steel	0,543
1	021	107.324.101.021	SCREW-IN UNION 25xG1	107.324.101	Steel	0,329
1	020	107.324.101.020	SCREW-IN UNION 25xG3/4	107.324.101	Steel	0,247
1	019	107.324.101.019	SCREW-IN UNION 20xG3/4	107.324.101	Steel	0,223
1	018	107.324.101.018	SCREW-IN UNION 20xG1/2	107.324.101	Steel	0,173
1	017	107.324.101.017	SCREW-IN UNION 16xG1/2	107.324.101	Steel	0,125
1	016	107.324.101.016	SCREW-IN UNION 16xG3/8	107.324.101	Steel	0,094
1	015	107.324.101.015	SCREW-IN UNION 12xG3/4	107.324.101	Steel	0,195
1	014	107.324.101.014	SCREW-IN UNION 12xG1/2	107.324.101	Steel	0,126
1	013	107.324.101.013	SCREW-IN UNION 12xG3/8	107.324.101	Steel	0,084
1	012	107.324.101.012	SCREW-IN UNION 12xG1/4	107.324.101	Steel	0,076
1	011	107.324.101.011	SCREW-IN UNION 10xG1/2	107.324.101	Steel	0,116
1	010	107.324.101.010	SCREW-IN UNION 10xG3/8	107.324.101	Steel	0,069
1	009	107.324.101.009	SCREW-IN UNION 10xG1/4	107.324.101	Steel	0,056
1	008	107.324.101.008	SCREW-IN UNION 8xG1/2	107.324.101	Steel	0,112
1	007	107.324.101.007	SCREW-IN UNION 8xG3/8	107.324.101	Steel	0,063
1	006	107.324.101.006	SCREW-IN UNION 8xG1/4	107.324.101	Steel	0,043
1	005	107.324.101.005	SCREW-IN UNION 8xG1/8	107.324.101	Steel	0,031
1	004	107.324.101.004	SCREW-IN UNION 6xG1/2	107.324.101	Steel	0,111
1	003	107.324.101.003	SCREW-IN UNION 6XG3/8	107.324.101	Steel	0,063
1	002	107.324.101.002	SCREW-IN UNION 6XG1/4	107.324.101	Steel	0,045
1	001	107.324.101.001	SCREW-IN UNION 6xG1/8	107.324.101	Steel	0,028

Free space for Ind.Cc.

Q-Code: XXXXX
Standard: ISO; JIS
Main Drw.

Used:
(B) 7-34.170 | 18.07.2005 | (C) 7-54.378 | 08.06.2007 | (D) EAAD083575 | 01.10.2012 | (E) EAAD091014 | 28.11.2019
Number | Drawn date | Number | Drawn date | Number | Drawn date | Number | Drawn date

WIN GD Winterthur Gas & Diesel

Product: W-2S

SCREW-IN UNION

Einschraubverschraubung

Units: mm kg | NX | Basic Material | Net Weight

SURFACE PROTECTION SEE GROUP 0344
TOLERANCING PRINCIPLE ISO8015
GENERAL TOLERANCES ACCORDING TO ISO2768-mK

Made	17.12.2004 wdo001 W.Doerig	Scale 1:1	Size A1 / Page 1/1 / Material ID
Chkd		Design Group 0333	Drawing ID 107.324.101 / Rev. E
Appd	28.02.2005 PST007		

Approved

ISO - DIMENSIONAL DRAWING - Confidential

Copyright Winterthur Gas & Diesel Ltd. All rights reserved. By taking possession of the drawing the recipient recognizes and honours these rights. Neither the whole nor any part of this drawing may be used in any way for construction, fabrication, marketing or any other purpose nor copied in any way nor made accessible to third parties without the previous written consent of Winterthur Gas & Diesel Ltd.

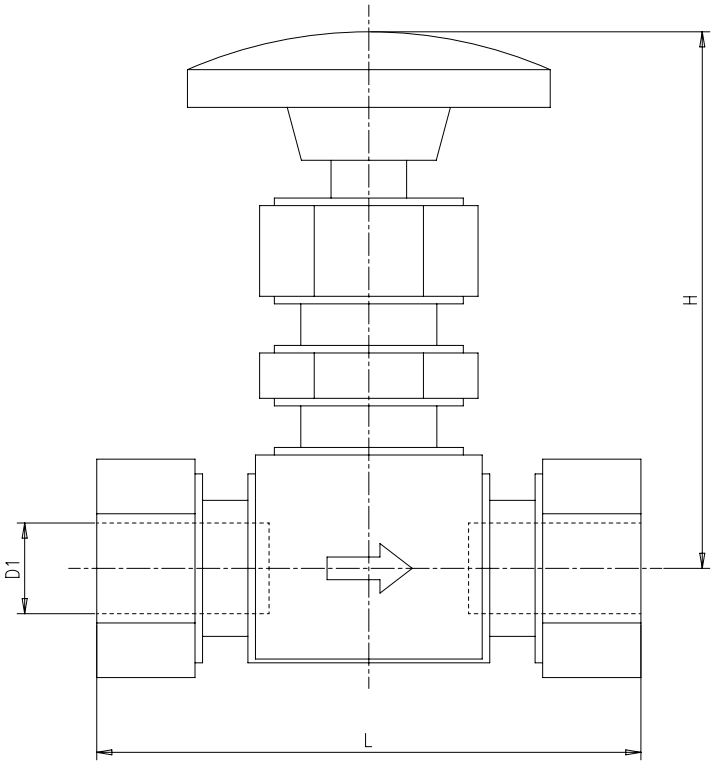

Artikel Nummer	DN	TUBE D1	L	H(open)
107.324.704.001	DN07	10	66	71
107.324.704.002	DN09	12	72	71
107.324.704.003	DN12	16	94	99
107.324.704.004	DN15	20	97	99
107.324.704.005	DN20	25	97	99
107.324.704.006	DN06	8	59,2	60

siehe Hauptzeichnung für Spezifikation
SEE MAIN DRAWING FOR SPECIFICATION

QTY	SEQ NO	Material ID	Material Name / Dimension, Occ	Standard or Drawing	Basic Material / Material Standard	Weight GR./NET
1	006	107.324.704.006	NEEDLE VALVE DN6	107.324.704	Steel	0,304
1	005	107.324.704.005	NEEDLE VALVE DN20	107.324.704	Steel	1,34
1	004	107.324.704.004	NEEDLE VALVE DN15	107.324.704	Steel	1,19
1	003	107.324.704.003	NEEDLE VALVE DN12	107.324.704	Steel	0,903
1	002	107.324.704.002	NEEDLE VALVE DN9	107.324.704	Steel	0,495
1	001	107.324.704.001	NEEDLE VALVE DN7	107.324.704	Steel	0,438

Approved

Free space for lic.

Q-Code: XXXXX
Standard: ISO; JIS
Main Drw.

Modif.	Number	Drawn date	Number	Drawn date	Number	Drawn date	Number	Drawn date
B	7-61.981	12.03.2008	C EAAD700013	19.01.2011	D EAAD083575	01.10.2012	E EAAD096344	12.03.2021

WIN GD Winterthur Gas & Diesel

Product: W-2S

NEEDLE VALVE

Nadelventil

Units: mm kg | NX | Basic Material | Net Weight

SURFACE PROTECTION SEE GROUP 0344	Made	19.05.2005 sga006 S.GASSER	Scale 2:1	Size A2	Page 1/1	Material ID
TOLERANCING PRINCIPLE ISO8015	Chkd		Design Group 0333	Drawing ID 107.324.704	Rev. E
GENERAL TOLERANCES ACCORDING TO ISO2768-mK	Appd	19.05.2005 MFR001 Frei			

DID - DIMENSIONAL DRAWING - Confidential

Copyright Winterthur Gas & Diesel Ltd. All rights reserved. By taking possession of the drawing the recipient recognizes and honours these rights. Neither the whole nor any part of this drawing may be used in any way for construction, fabrication, marketing or any other purpose nor copied in any way nor made accessible to third parties without the previous written consent of Winterthur Gas & Diesel Ltd.

MIDS - WinGD X62 – COOLING WATER SYSTEM (DG9721)

TRACK CHANGES

DATE	SUBJECT	DESCRIPTION
2016-11-04	DRAWING SET	First web upload
2017-01-12	107.245.626	System drg – new revision
2017-09-22	DAAD031234	System drg – new revision
2018-12-12	DAAD031310 DAAD031234	Main and System drg – new revision
2019-08-29	DAAD031234	System drg – new revision
2019-09-26	DAAD101945 DAAD101890	Air separator drg – new revision
2020-09-02	107.245.419	System drg – new revision
2020-10-07	DAAD031234 107.324.703 107.324.704	System drgs – new revision
2021-02-24	107.324.101	System drg – new revision
2021-03-30	DAAD101945 107.324.703 107.324.704	System drgs – new revision

DISCLAIMER

© Copyright by Winterthur Gas & Diesel Ltd.
All rights reserved. No part of this document may be reproduced or copied in any form or by any means (electronic, mechanical, graphic, photocopying, recording, taping or other information retrieval systems) without the prior written permission of the copyright owner.

THIS PUBLICATION IS DESIGNED TO PROVIDE AN ACCURATE AND AUTHORITATIVE INFORMATION WITH REGARD TO THE SUBJECT-MATTER COVERED AS WAS AVAILABLE AT THE TIME OF PRINTING. HOWEVER, THE PUBLICATION DEALS WITH COMPLICATED TECHNICAL MATTERS SUITED ONLY FOR SPECIALISTS IN THE AREA, AND THE DESIGN OF THE SUBJECT-PRODUCTS IS SUBJECT TO REGULAR IMPROVEMENTS, MODIFICATIONS AND CHANGES. CONSEQUENTLY, THE PUBLISHER AND COPYRIGHT OWNER OF THIS PUBLICATION CAN NOT ACCEPT ANY RESPONSIBILITY OR LIABILITY FOR ANY EVENTUAL ERRORS OR OMISSIONS IN THIS BOOKLET OR FOR DISCREPANCIES ARISING FROM THE FEATURES OF ANY ACTUAL ITEM IN THE RESPECTIVE PRODUCT BEING DIFFERENT FROM THOSE SHOWN IN THIS PUBLICATION. THE PUBLISHER AND COPYRIGHT OWNER SHALL UNDER NO CIRCUMSTANCES BE HELD LIABLE FOR ANY FINANCIAL CONSEQUENTIAL DAMAGES OR OTHER LOSS, OR ANY OTHER DAMAGE OR INJURY, SUFFERED BY ANY PARTY MAKING USE OF THIS PUBLICATION OR THE INFORMATION CONTAINED HEREIN.

Winterthur Gas & Diesel Ltd.
Winterthur Gas & Diesel AG.
Winterthur Gas & Diesel S.A.

Schützenstrasse 3
PO Box 414, CH-8401
Winterthur, Switzerland

Tel. +41 (0)52 264 8844
Fax +41 (0)52 264 8866