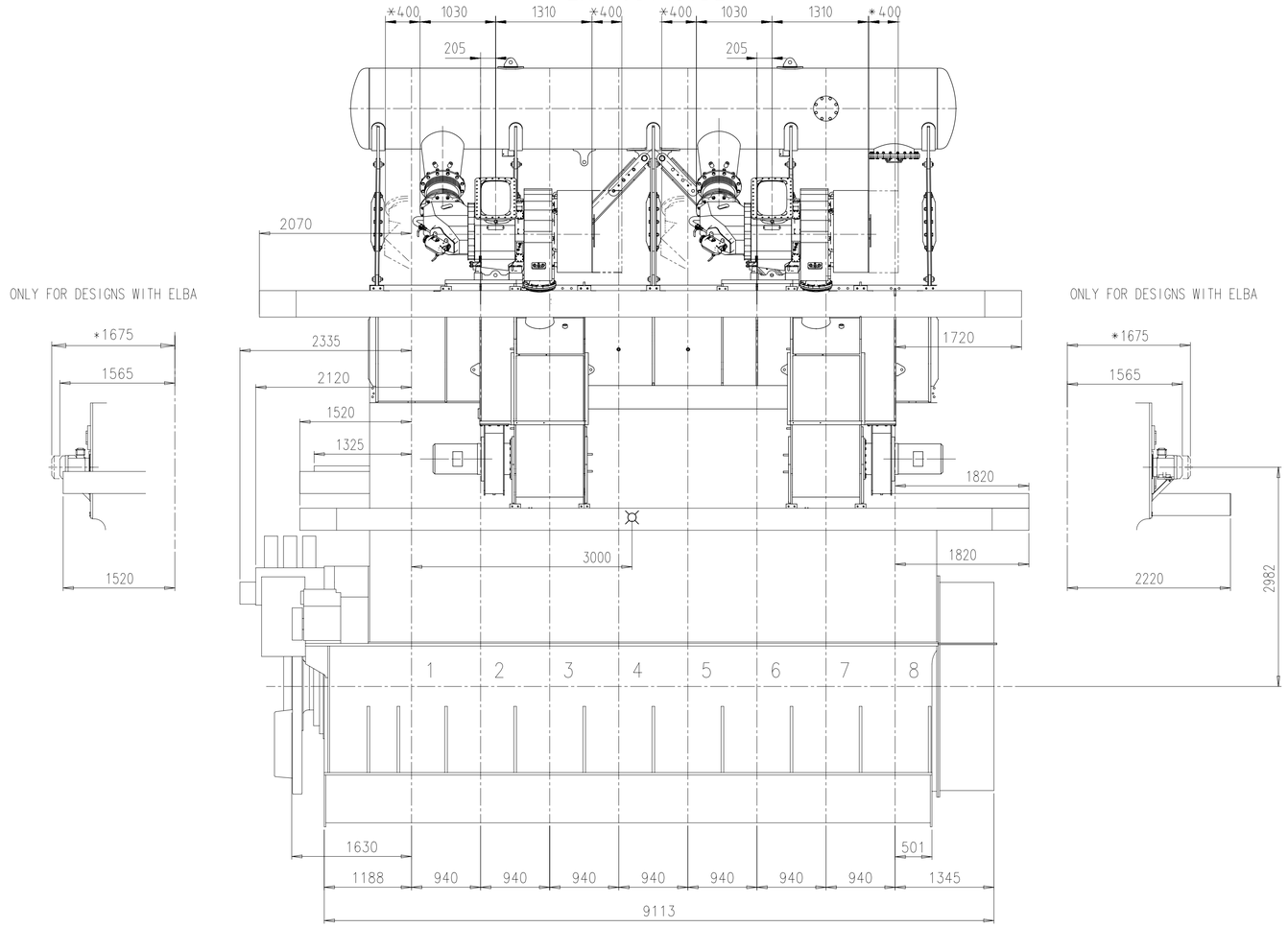
Download "DXF file"

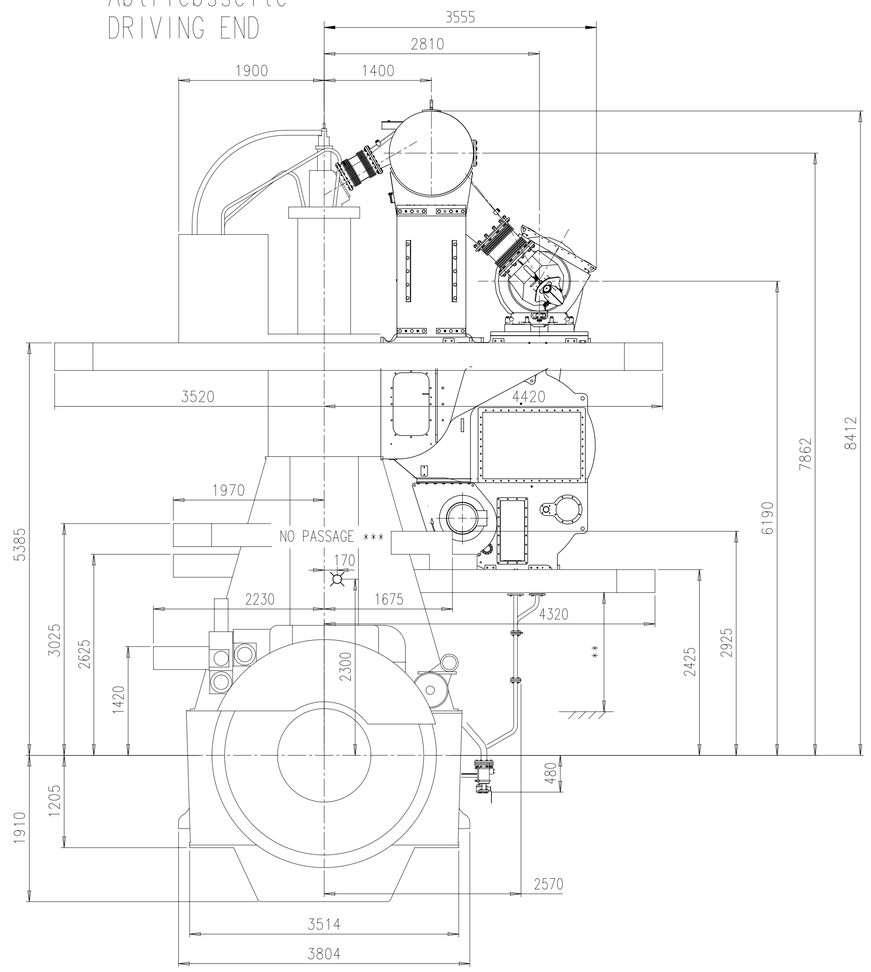
Abgasseite
EXHAUST SIDE

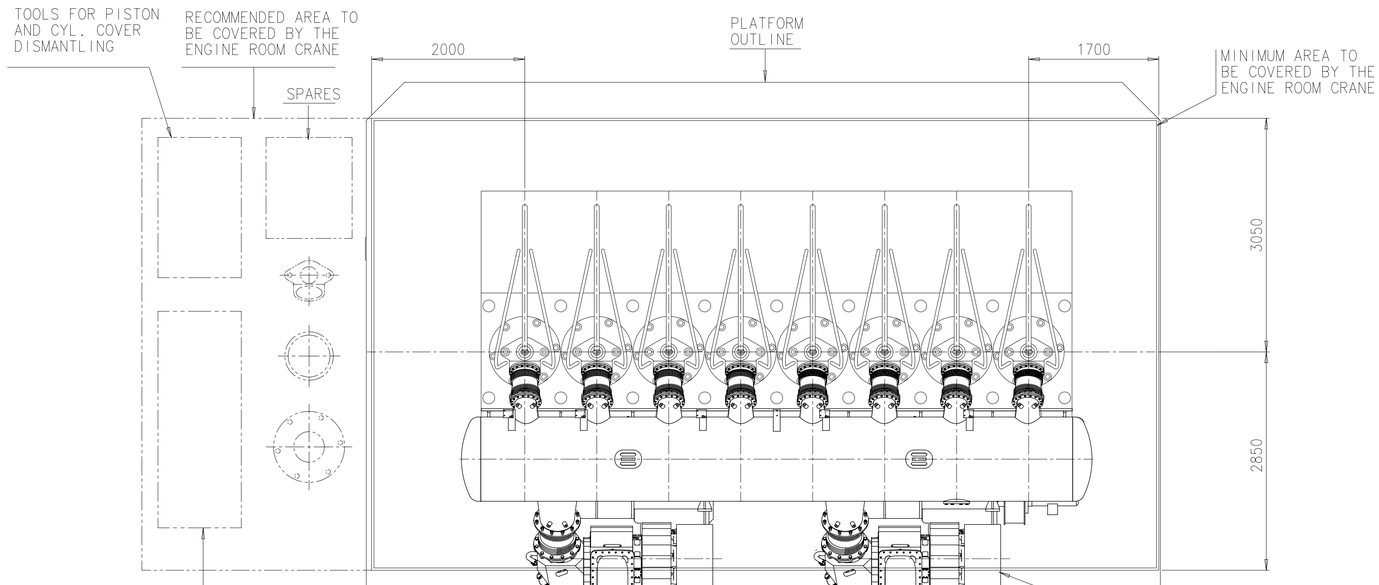


ONLY FOR DESIGNS WITH ELBA

ONLY FOR DESIGNS WITH ELBA

Abtriebsseite
DRIVING END





⌘ APPROXIMATE CENTRE OF GRAVITY

WEIGHT WITHOUT WATER OR OIL = 323t

* SPACE FOR REMOVAL

** ATTENTION: FREE SPACE FOR PASSAGE IS REDUCED, IF THE BASIS LEVEL ON THE SHIP IS HIGHER THAN THE CENTRE OF CRANKSHAFT.

*** THE LOWER PLATFORM HAS NO PASSAGE ON THE DRIVING END-SIDE. IF A PASSAGE IS REQUIRED, A SHIP-SIDED WAY HAS TO BE ARRANGED.

TURBOCHARGER A165-L A265-L

DIMENSIONS FOR REFERENCE ONLY! THIS OUTLINE DRAWING CAN NOT BE USED FOR THE FINAL DESIGN! PLEASE TAKE THE CORRESPONDING DESIGN GROUP!

NetWeight									
0,001									
1	001	PAAD250126	DISMANTLING DIMENSIONS		DAAD086338				0,001
Quantity PER ENGINE	SEQ NO	Material ID	Material Name / Dimension, Occ		Standard or Drawing		Basic Material / Material Standard		Weight GR./NET
PAAD302722	Free space for ic.						Q-Code XXXXX / Standard ISO; JIS		Main Drw. H
Material ID	Modif.	Number	Drawn date	Number	Drawn date	Number	Drawn date	Number	Drawn date

WIN GD Winterthur Gas & Diesel

Product W8X52DF

ENGINE OUTLINE VIEW

Motoransichten

Units	mm kg	NX		Basic Material			Net Weight
SURFACE PROTECTION SEE GROUP 0344	Made	24.07.2018	Pravin Wakchoure	Scale 1:40	Size A1	Page 1/1	Material ID
TOLERANCING PRINCIPLE ISO8015	Chkd	25.07.2018	nba032 Baumgartner	Design Group 0812	Drawing ID DAAD104190		Rev. –
GENERAL TOLERANCES ACCORDING TO ISO2768-mK	Appd	25.07.2018	rf1002 Fliegans				

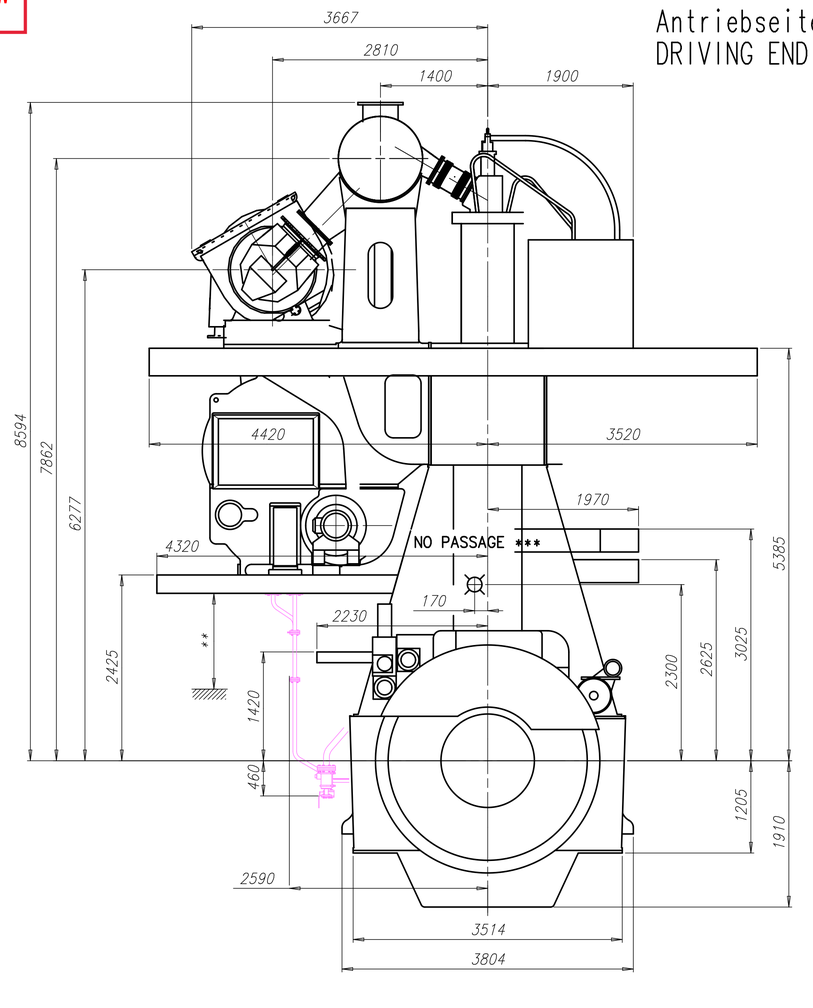
Approved

DD - DIMENSIONAL DRAWING - Confidential

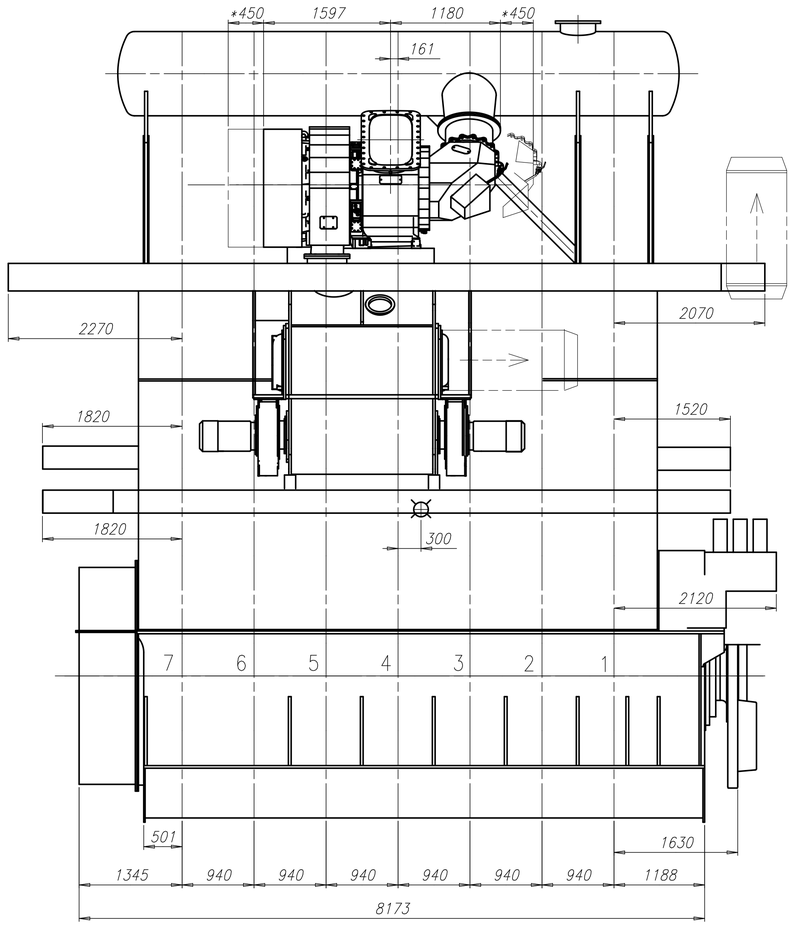
Copyright Winterthur Gas & Diesel Ltd. All rights reserved. By taking possession of the drawing the recipient recognizes and honours these rights. Neither the whole nor any part of this drawing may be used in any way for construction, fabrication, marketing or any other purpose nor copied in any way nor made accessible to third parties without the previous written consent of Winterthur Gas & Diesel Ltd.

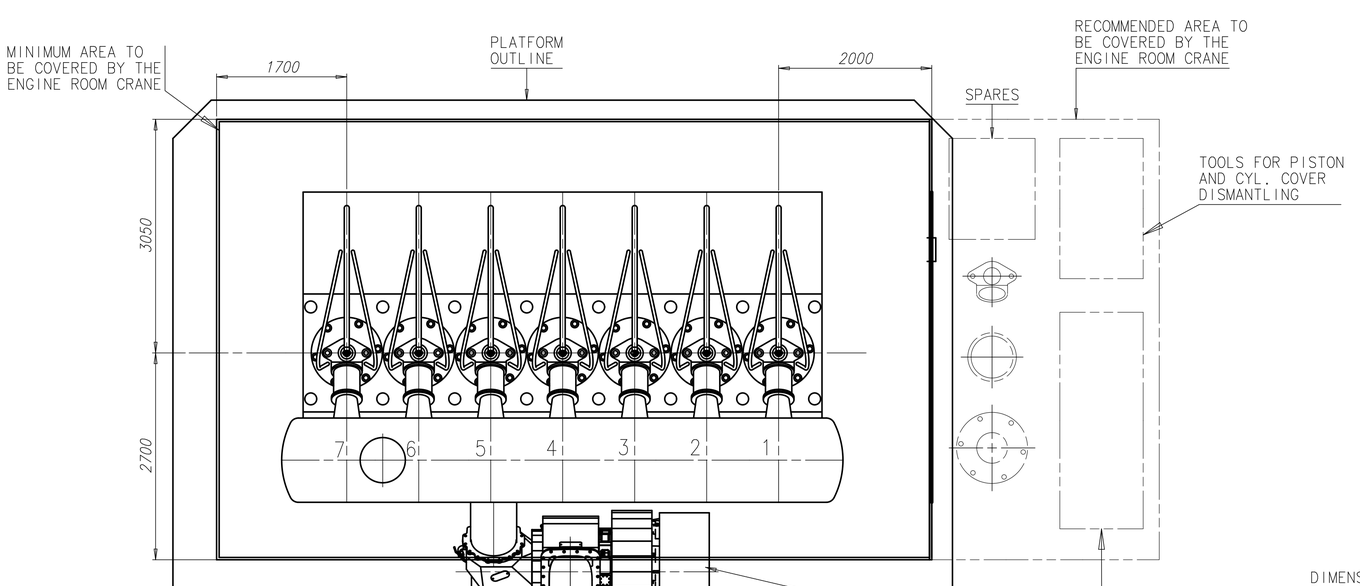
Download
"DXF file"

Antriebseite
DRIVING END



Abgasseite
EXHAUST SIDE





APPROXIMATE CENTRE OF GRAVOTY
WEIGHT WITHOUT WATER OR OIL =288t

* SPACE FOR REMOVAL
** ATTENTION: FREE SPACE FOR PASSAGE IS REDUCED,
IF THE BASIS LEVEL OF THE SHIP IS HIGHER
THAN THE CENTRE OF THE CRANKSHAFT
*** THE LOWER PLATFORM HAS NO PASSAGE
ON THE DRIVING END SIDE.
IF A PASSAGE IS REQUIRED,
A SHIP SIDED WAY HAS TO BE ARRANGED

TURBOCHARGER A270-L

DIMENSIONS FOR REFERENCE ONLY!
THIS OUTLINE DRAWING CAN NOT
BE USED FOR FINAL DESIGN!
PLEASE TAKE THE CORRESPONDING
DESIGN GROUP!

Net Weight 0.001							
Quantity PER ENGINE 1	SEQ NO 001	Material ID PAAD250126	Material Name DISMANTLING DIMENSIONS	Dimension/Occ.Dimension	Standard or Drawing DAAD086338	Basic Material / Material Standard	Weight GR./NET 0.001
Material ID PAAD272627	Free space for inf.					Q-Code XXXXX	Main Drw. H
						Standard ISO JIS	

Approved

Mod.-Nr.	Number	Drawn date	Number	Drawn date	Number	Drawn date	Number	Drawn date

WIN GD Winterthur Gas & Diesel

Product W7X52DF (LEFT)

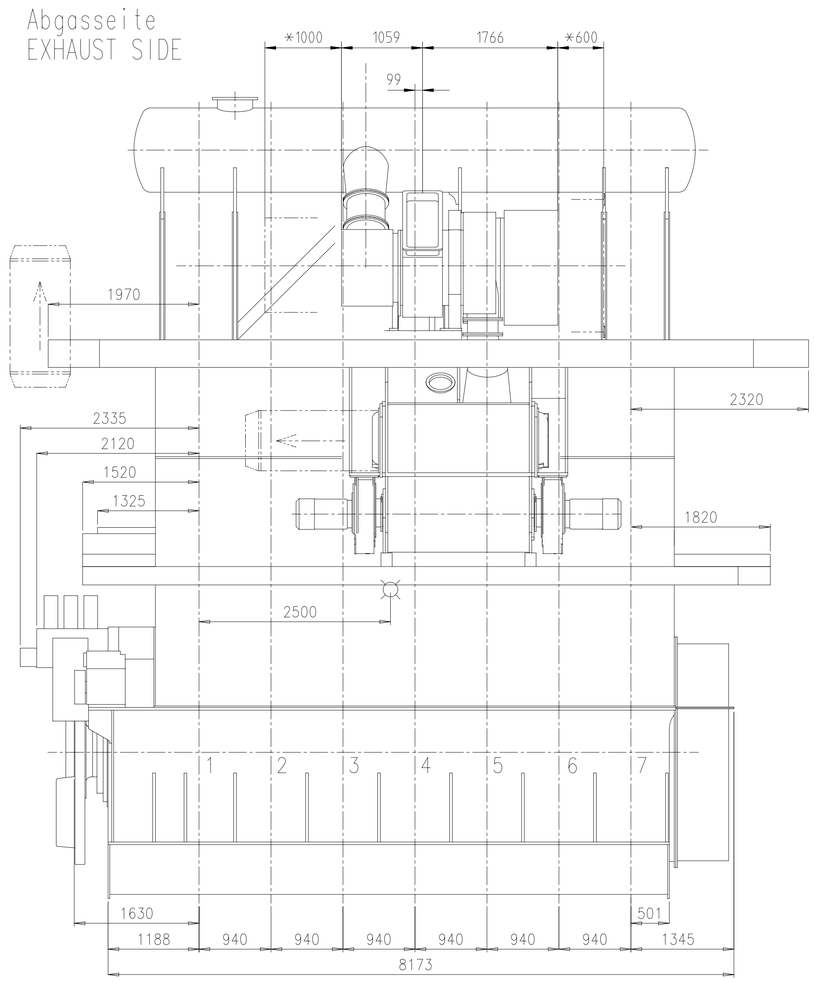
ENGINE OUTLINE VIEW
1 x A270
Motoransichten
1 x A270

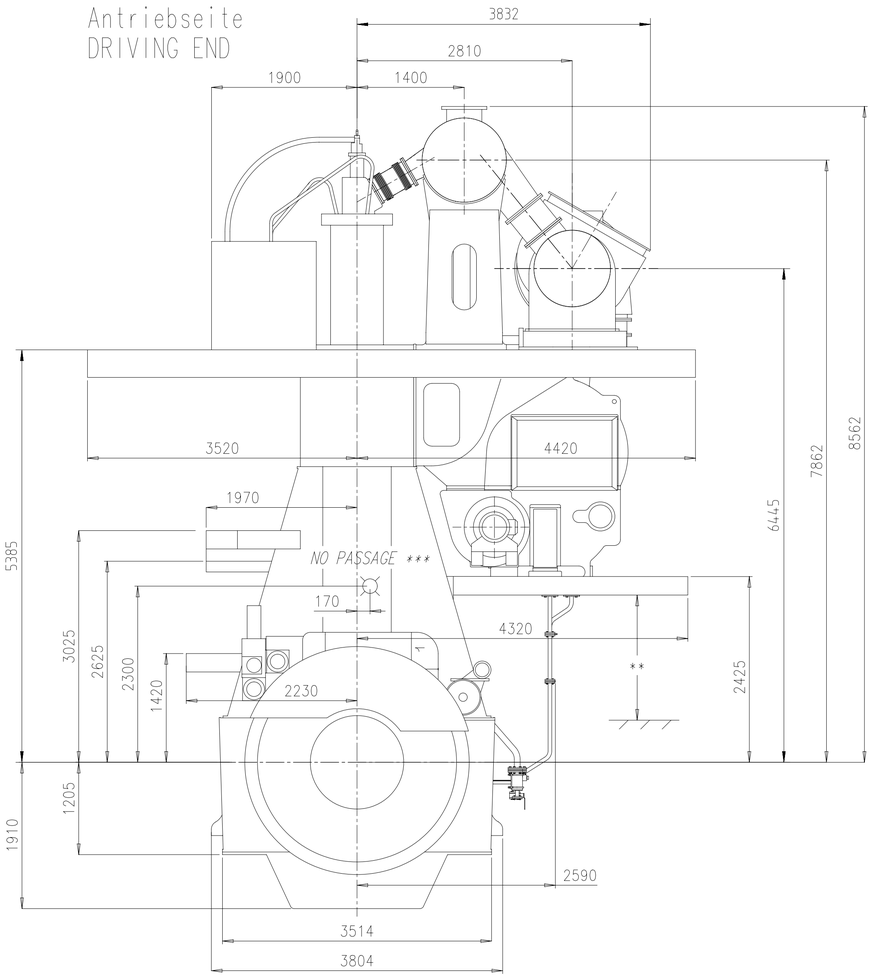
Units mm kg	IDE		Basic Material			Net Weight
SURFACE PROTECTION SEE GROUP 0344	Mode	24.08.2017 rsox04 R.W.Sola	Scale 1:40	Size A1	Page 1/1	Material ID
TOLERANCING PRINCIPLE ISO8015	Chkd	15.09.2017 uba001 Balsiger	Design Group 0812	Drawing ID DAAD092455		Rev. –
GENERAL TOLERANCES ACCORDING TO ISO2768-mK	Appd	15.09.2017 mda006 Dacic				

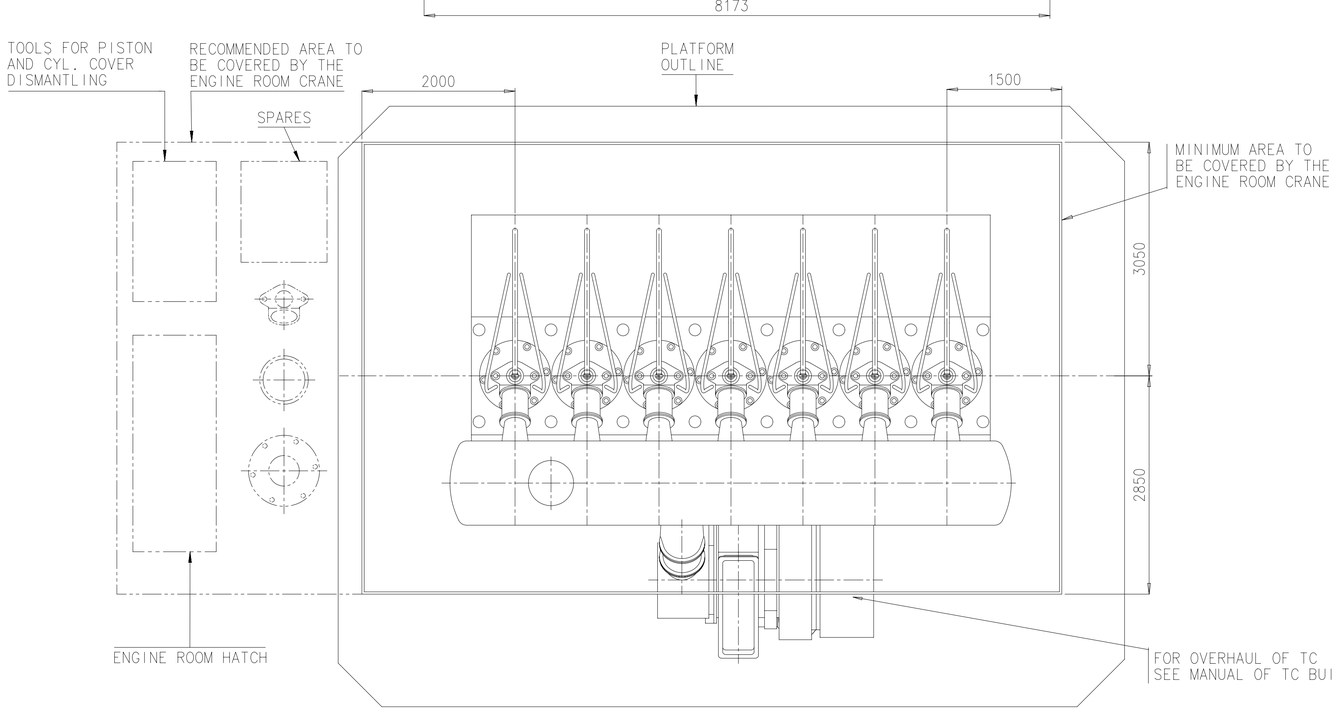
DID - DIMENSIONAL DRAWING - Confidential

Copyright Winterthur Gas & Diesel Ltd. All rights reserved. By taking possession of the drawing the recipient recognizes and honours these rights. Neither the whole nor any part of this drawing may be used in any way for construction, fabrication, marketing or any other purpose nor copied in any way nor made accessible to third parties without the previous written consent of Winterthur Gas & Diesel Ltd.

Download "DXF file"







⌾ APPROXIMATE CENTRE OF GRAVOTY

WEIGHT WITHOUT WATER OR OIL =288t

* SPACE FOR REMOVAL

** ATTENTION: FREE SPACE FOR PASSAGE IS REDUCED, IF THE BASIS LEVEL OF THE SHIP IS HIGHER THAN THE CENTRE OF THE CRANKSHAFT

*** THE LOWER PLATFORM HAS NO PASSAGE ON THE DRIVING END SIDE. IF A PASSAGE IS REQUIRED, A SHIP SIDED WAY HAS TO BE ARRANGED

TURBOCHARGER MET60MB

Net Weight						
0,001						
1	001	PAAD250126	DISMANTLING DIMENSIONS	DAAD086338		0,001
Quantity PER ENGINE	SEQ NO	Material ID	Material Name Dimension, Occ	Standard or Drawing	Basic Material Material Standard	Weight GR./NET
PAAD284422 MaterialID	Free space for Inc				Q-Code XXXXX Standard ISO; JIS	Main Drw. H
Model	Number	Drawn date	Number	Drawn date	Number	Drawn date

Approved

DIMENSIONS FOR REFERENCE ONLY!
THIS OUTLINE DRAWING CAN NOT BE USED FOR FINAL DESIGN!
PLEASE TAKE THE CORRESPONDING DESIGN GROUP!

WIN GD Winterthur Gas & Diesel

Product W7X52DF (STD)

ENGINE OUTLINE VIEW
1 x MET60MB
Motoransichten
1 x MET60MB

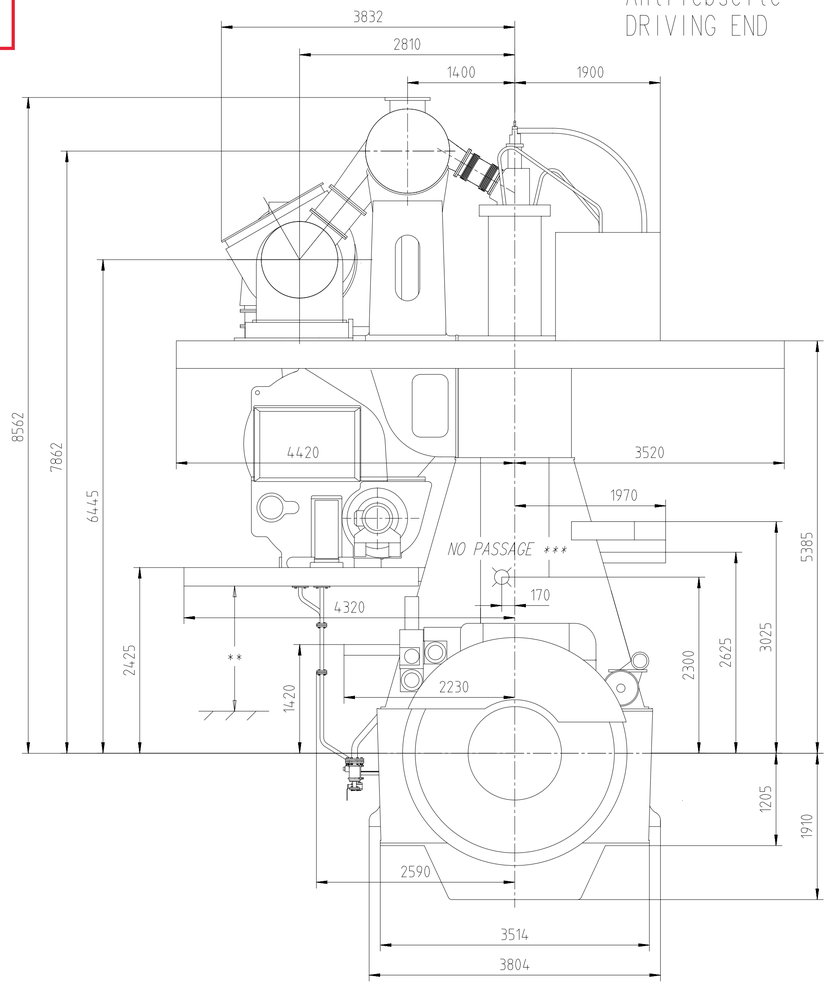
Units mm kg	NX		Basic Material		Net Weight
SURFACE PROTECTION SEE GROUP 0344	Made	29.01.2018	mbr102 Brühwiler	Scale 1:40	Size A1 / Page 1/1 / Material ID
TOLERANCING PRINCIPLE ISO8015	Chkd	14.02.2018	rfl002 Fliegans	Design Group 0812	Drawing ID DAAD096718 / Rev. –
GENERAL TOLERANCES ACCORDING TO ISO2768-mK	Appd	14.02.2018	mda006 Dacic		

DD - DIMENSIONAL DRAWING - Confidential

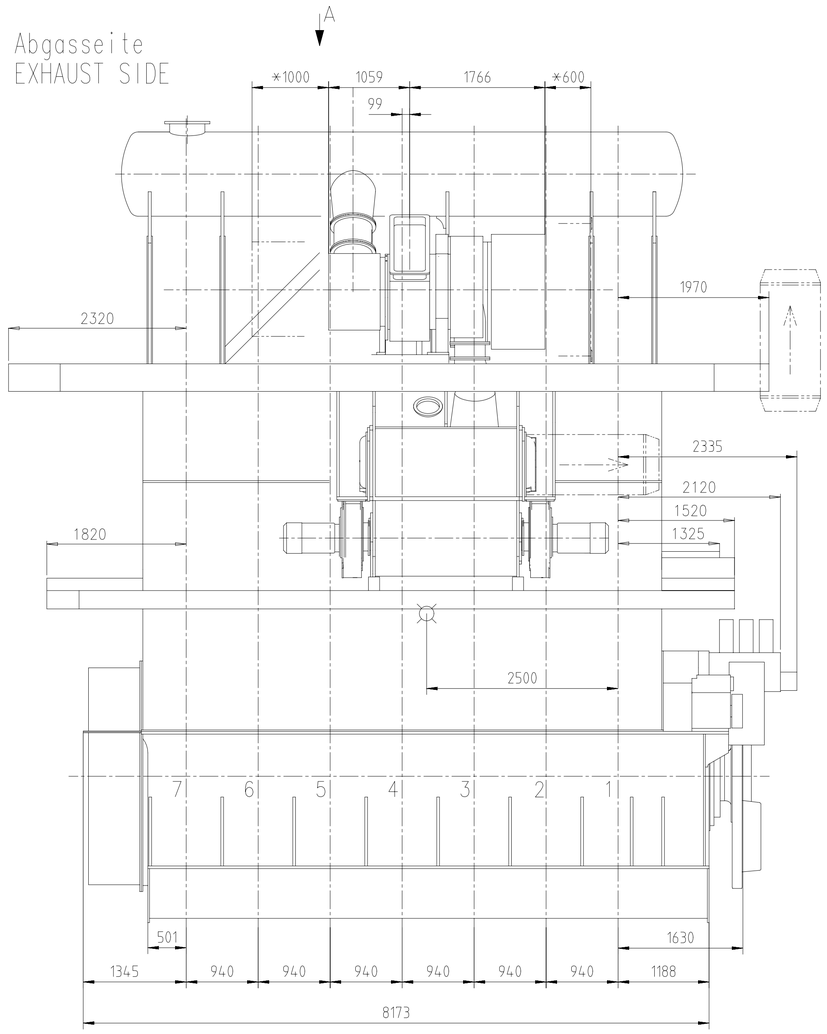
Copyright Winterthur Gas & Diesel Ltd. All rights reserved. By taking possession of the drawing the recipient recognizes and honours these rights. Neither the whole nor any part of this drawing may be used in any way for construction, fabrication, marketing or any other purpose nor copied in any way nor made accessible to third parties without the previous written consent of Winterthur Gas & Diesel Ltd.

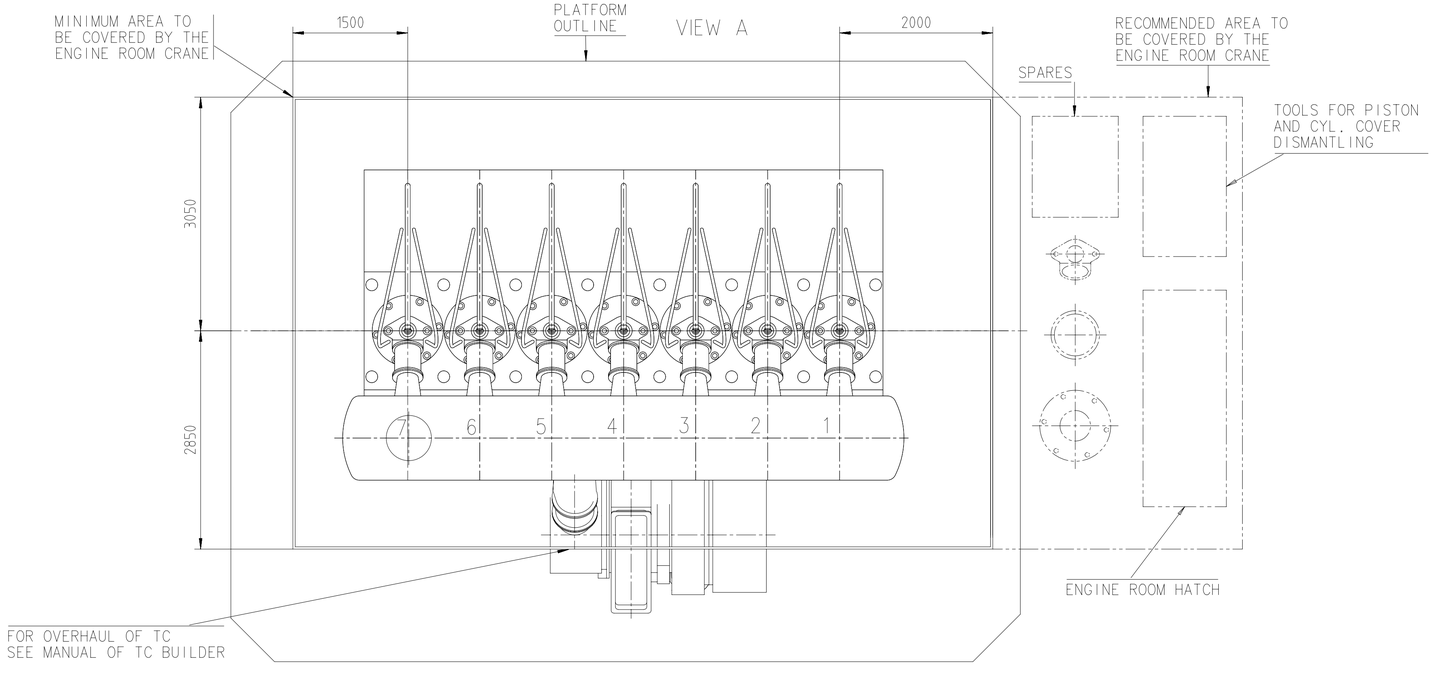
Download "DXF file"

Antriebseite
DRIVING END



Abgasseite
EXHAUST SIDE





⌾ APPROXIMATE CENTRE OF GRAVOTY

WEIGHT WITHOUT WATER OR OIL =288t

* SPACE FOR REMOVAL

** ATTENTION: FREE SPACE FOR PASSAGE IS REDUCED, IF THE BASIS LEVEL OF THE SHIP IS HIGHER THAN THE CENTRE OF THE CRANKSHAFT

*** THE LOWER PLATFORM HAS NO PASSAGE ON THE DRIVING END SIDE. IF A PASSAGE IS REQUIRED, A SHIP SIDED WAY HAS TO BE ARRANGED

TURBOCHARGER MET60MB

Net Weight						
0,001						
Quantity PER ENGINE	SEQ NO	Material ID	Material Name / Dimension, Occ	Standard or Drawing	Basic Material / Material Standard	Weight GR./NET
1	001	PAAD250126	DISMANTLING DIMENSIONS	DAAD086338		0,001

Approved

Material ID	Modif.	Free space for Ic.	Q-Code	Main Drw.
PAAD287309			XXXXX / Standard ISO; JIS	H

Modif. Number	Drawn date	Number	Drawn date	Number	Drawn date	Number	Drawn date

DIMENSIONS FOR REFERENCE ONLY!
THIS OUTLINE DRAWING CAN NOT BE USED FOR FINAL DESIGN!
PLEASE TAKE THE CORRESPONDING DESIGN GROUP!

WIN GD Winterthur Gas & Diesel

Product: W7X52DF (LEFT)

ENGINE OUTLINE VIEW
1 x MET60MB
Motoransichten
1 x MET60MB

Units	mm kg	NX	Basic Material	Net Weight

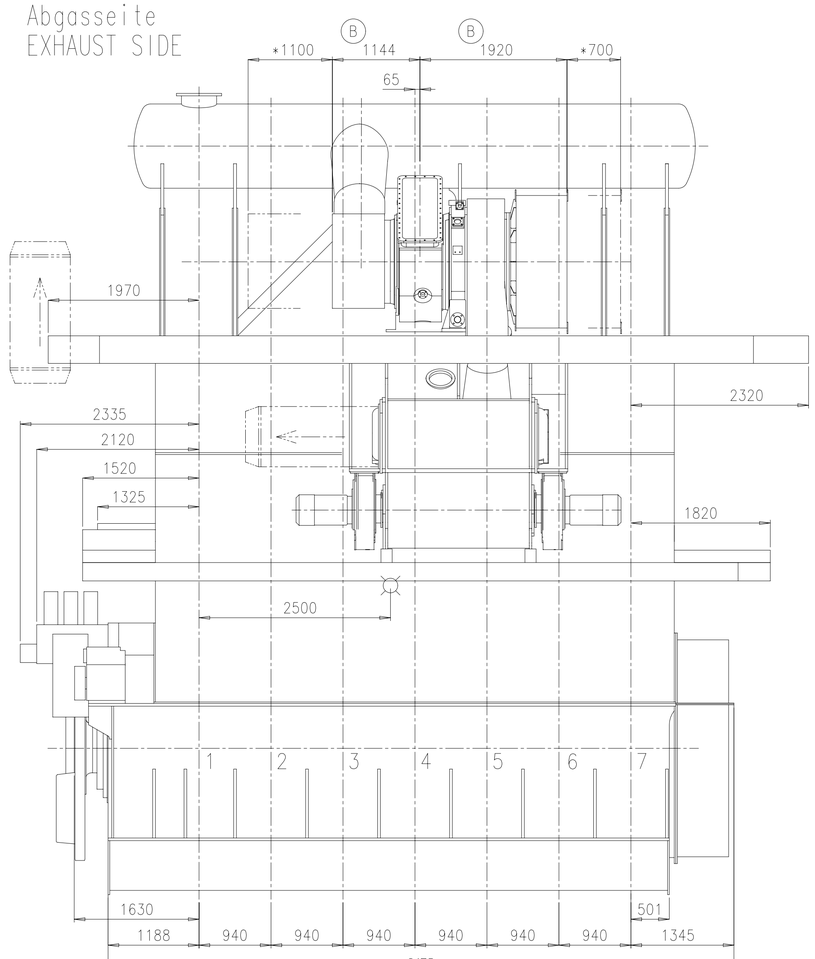
SURFACE PROTECTION SEE GROUP 0344	Made	01.03.2018	Pravin Wakchoure	Scale 1:40	Size A1 / Page 1/1	Material ID
TOLERANCING PRINCIPLE ISO8015	Chkd	29.03.2018	rf002 Fliegans	Design Group 0812	Drawing ID DAAD097587	Rev. -
GENERAL TOLERANCES ACCORDING TO ISO2768-mK	Appd	29.03.2018	mda006 Dacic			

DD - DIMENSIONAL DRAWING - Confidential

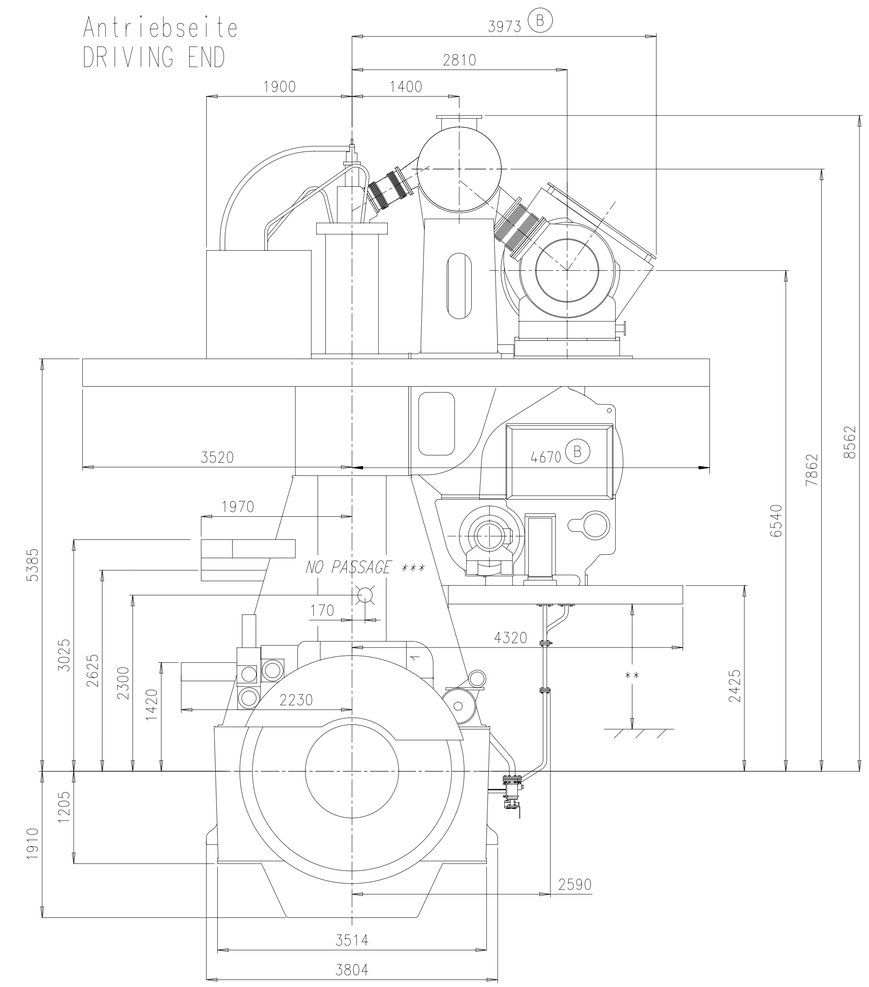
Copyright Winterthur Gas & Diesel Ltd. All rights reserved. By taking possession of the drawing the recipient recognizes and honours these rights. Neither the whole nor any part of this drawing may be used in any way for construction, fabrication, marketing or any other purpose nor copied in any way nor made accessible to third parties without the previous written consent of Winterthur Gas & Diesel Ltd.

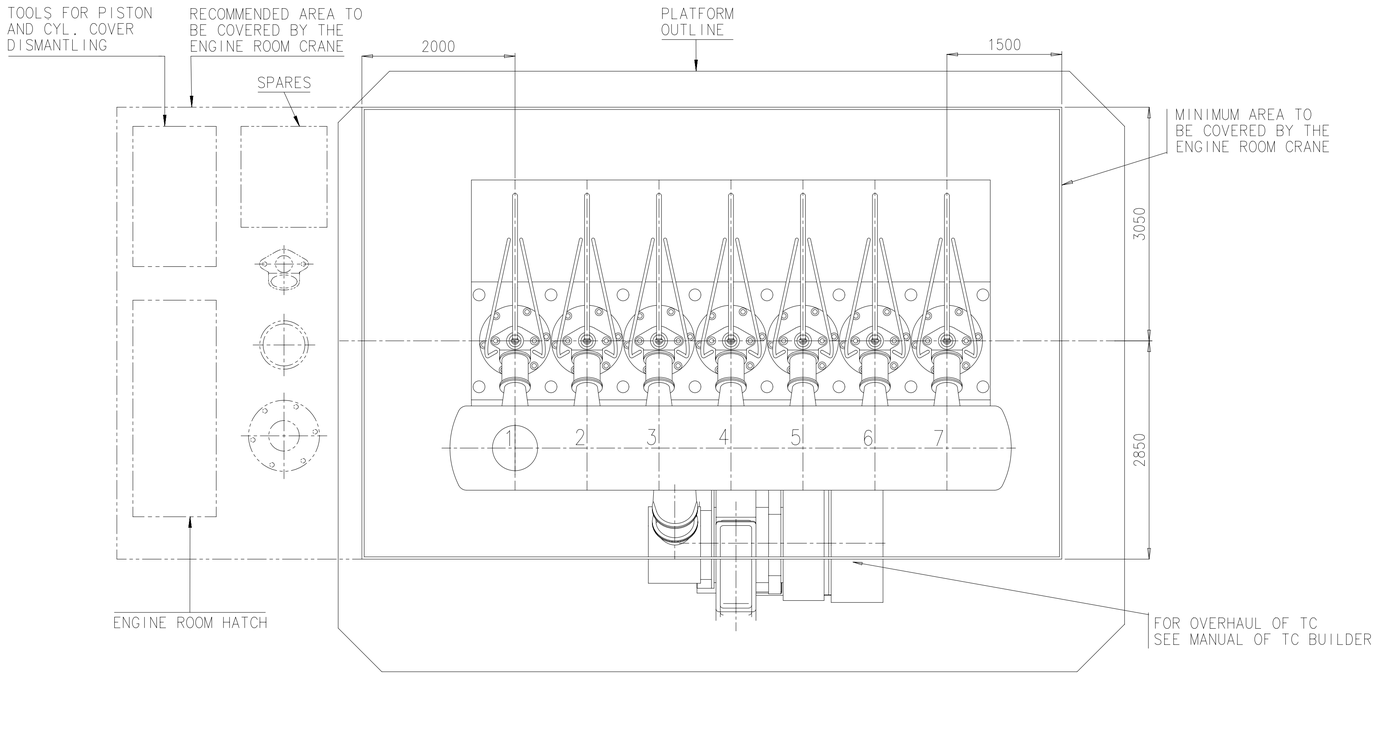
Download "DXF file"

Abgasseite
EXHAUST SIDE



Antriebseite
DRIVING END





⊗ APPROXIMATE CENTRE OF GRAVOTY

WEIGHT WITHOUT WATER OR OIL =288t

* SPACE FOR REMOVAL

** ATTENTION: FREE SPACE FOR PASSAGE IS REDUCED, IF THE BASIS LEVEL OF THE SHIP IS HIGHER THAN THE CENTRE OF THE CRANKSHAFT

*** THE LOWER PLATFORM HAS NO PASSAGE ON THE DRIVING END SIDE. IF A PASSAGE IS REQUIRED, A SHIP SIDED WAY HAS TO BE ARRANGED

TURBOCHARGER MET66MB

Net Weight	Quantity PER ENGINE	SEQ NO	Material ID	Material Name / Dimension, Occ	Standard or Drawing	Basic Material / Material Standard	Weight GR./NET
0,001	1	001	PAAD250126	DISMANTLING DIMENSIONS	DAAD086338		0,001

Approved

Material ID	Free space for Inc.	Q-Code / Standard	Main Drw.
PAAD279233		XXXXX / ISO; JIS	H

Mod	Number	Drawn date	Number	Drawn date	Number	Drawn date	Number	Drawn date
A	EAAD088759	15.11.2017	B EAAD089019	06.02.2018				

DIMENSIONS FOR REFERENCE ONLY!
THIS OUTLINE DRAWING CAN NOT BE USED FOR FINAL DESIGN!
PLEASE TAKE THE CORRESPONDING DESIGN GROUP!

WIN GD Winterthur Gas & Diesel

Product: W7X52DF (STD)

ENGINE OUTLINE VIEW
1 x MET66MB
Motoransichten
1 x MET66MB

Units	mm kg	NX	Basic Material	Net Weight

SURFACE PROTECTION SEE GROUP 0344	Made	03.11.2017	rsax04 Sola	Scale 1:40	Size A1 / Page 1/1 / Material ID
TOLERANCING PRINCIPLE ISO8015	Chkd	07.11.2017	hdo002 Dörre	Design Group 0812	Drawing ID DAAD094262 / Rev. B
GENERAL TOLERANCES ACCORDING TO ISO2768-mK	Appd	07.11.2017	mda006 Dacic		

3D - DIMENSIONAL DRAWING - Confidential

Copyright Winterthur Gas & Diesel Ltd. All rights reserved. By taking possession of the drawing the recipient recognizes and honours these rights. Neither the whole nor any part of this drawing may be used in any way for construction, fabrication, marketing or any other purpose nor copied in any way nor made accessible to third parties without the previous written consent of Winterthur Gas & Diesel Ltd.

Download
"DXF file"

Zuganker
TIE ROD

Kolben mit Stange komplett
und Stopfbuechse
PISTON WITH ROD COMPLETE
AND GLAND BOX

Gewicht ohne Hebewerkzeug
WEIGHT WITHOUT LIFTING TOOL
(A) 1220 kg

Zylindereinsatz mit Wasserleitmantel
CYLINDER LINER WITH WATER GUIDE JACKET

Gewicht ohne Hebewerkzeug
WEIGHT WITHOUT LIFTING TOOL
(A) 3250 kg

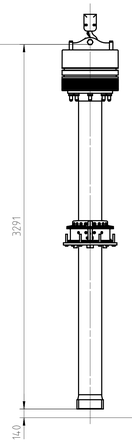
Zylinderdeckel mit komplett
Auslassventil und Wasserleitmantel
CYLINDER COVER WITH COMPLETE
EXHAUST VALVE AND WATER
GUIDE JACKET

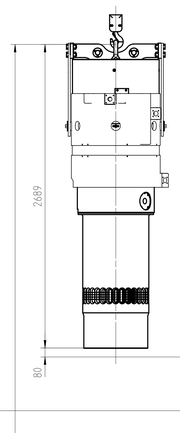
Gewicht ohne Hebewerkzeug
WEIGHT WITHOUT LIFTING TOOL
(A) 1780 kg

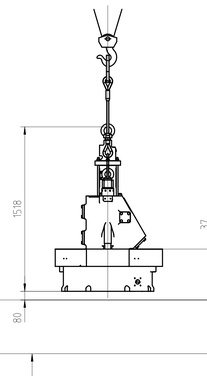
Auslassventil komplett
EXHAUST VALVE COMPLETE

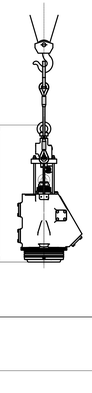
Gewicht ohne Hebewerkzeug
WEIGHT WITHOUT LIFTING TOOL
(A) 495 kg

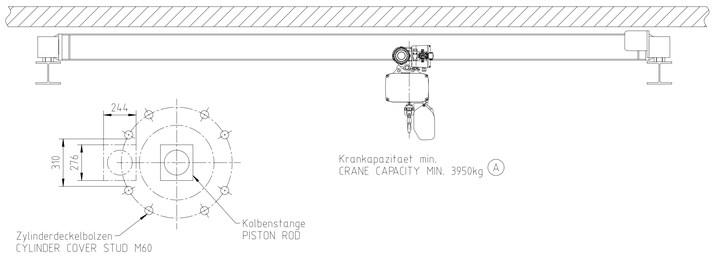


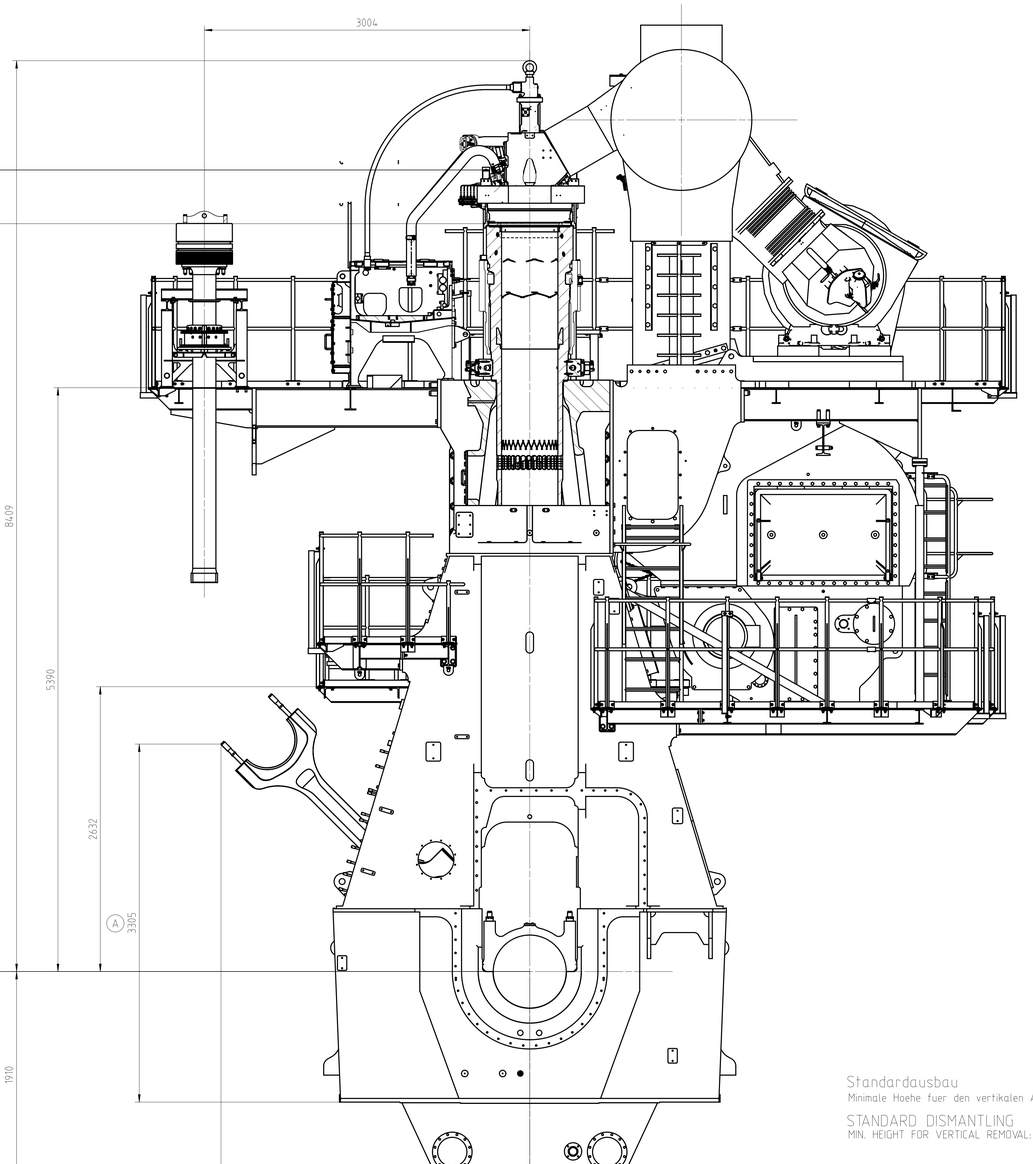












Kompatibilitaetshinweis zum Kranhaken
Die Hebewerkzeuge zu diesem Motor
sind kompatibel mit folgenden
Kranhaken:
DIN 15401: Form RSN, Hakennummer 1.6 und 2.5

COMPATIBILITY NOTE FOR CRANE HOOK
THE LIFTING TOOLS FOR THIS ENGINE
ARE COMPATIBLE WITH FOLLOWING
CRANE HOOK:
DIN 15401: SHAPE RSN, HOOK NUMBER 1.6 AND 2.5

Standardausbau
Minimale Hoehe fuer den vertikalen Ausbau: F1

STANDARD DISMANTLING
MIN. HEIGHT FOR VERTICAL REMOVAL: F1

Prev. Matrix No.										Q-Code XXXXX	Main Drw.
Mod.	A	EAAD091495	21.04.2020							Standard ISO; JIS	
	Number	Drawn date	Number	Drawn date	Number	Drawn date	Number	Drawn date	Number	Drawn date	

WIN GD Winterthur Gas & Diesel

Product X52DF

DISMANTLING DIMENSIONS

Ausbaumasse

Units	mm kg	NX	Basic Material:	Net Weight 0.001

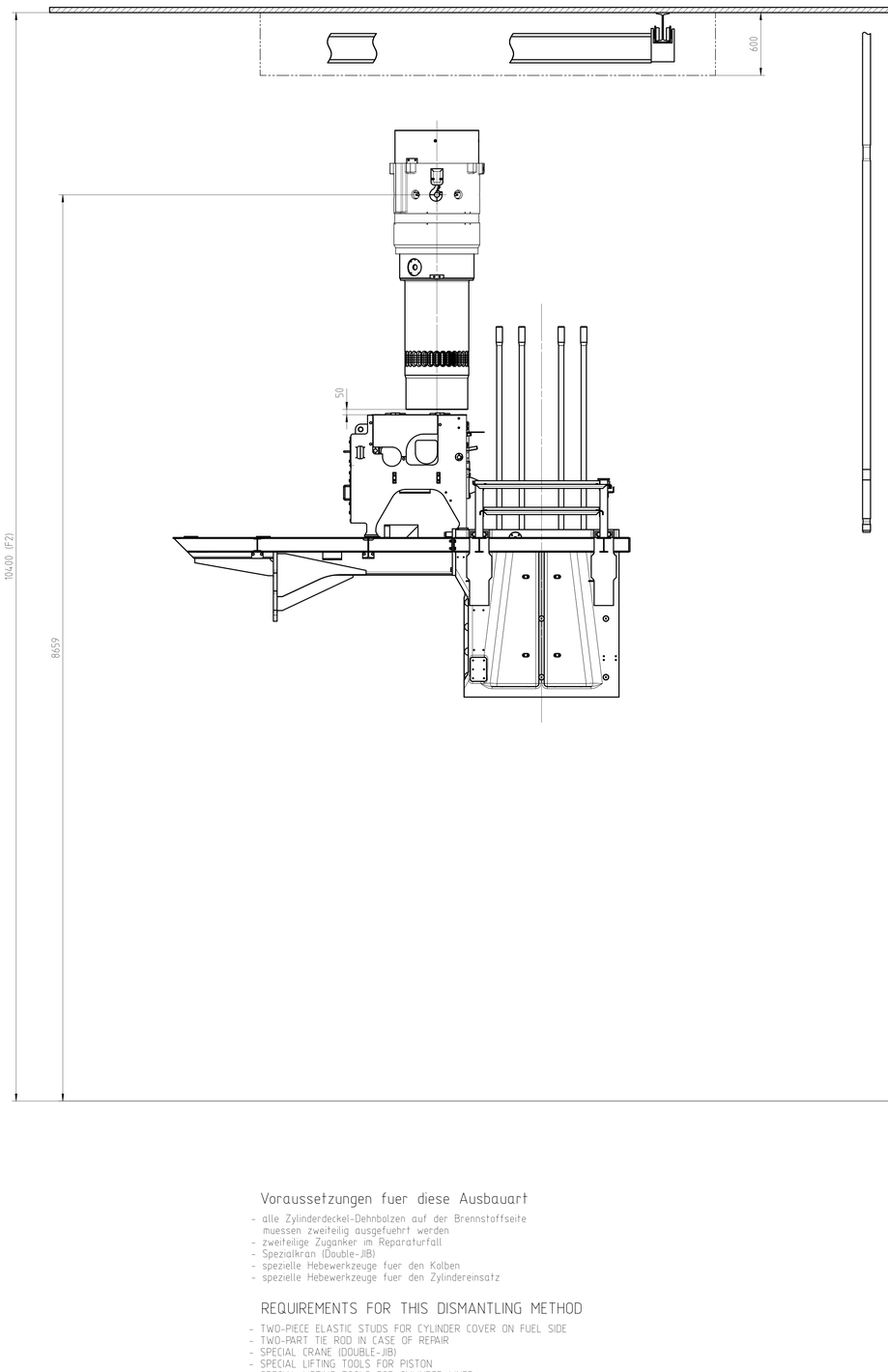
SURFACE PROTECTION SEE GROUP 0344	Made	17.01.2017	Ravindra Patil	Scale 1:20	Size A0	Page 1/3	Material ID	PAAD250126
TOLERANCING PRINCIPLE ISO8015	Chkd	20.04.2017	mkr021 Krumpl	Design Group 0812	Drawing ID	DAAD086338	Rev.	A
GENERAL TOLERANCES ACCORDING TO ISO2768-mK	Appd	21.04.2017	mda006 Dacic					

Approved
UNCONTROLLED COPY if printed

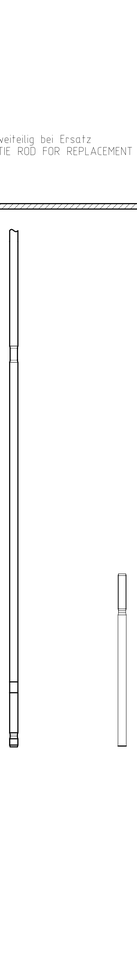
Copyright Winterthur Gas & Diesel Ltd. All rights reserved. By having possession of the drawing the recipient recognizes and honours these rights. Neither the whole nor any part of the drawing may be used in any way for construction, fabrication, marketing or any other purpose nor copied in any way nor made accessible to third parties without the previous written consent of Winterthur Gas & Diesel Ltd.

DOUBLE-JIB CRANE

Krankapazitaet min. 2x2150 kg
CRANE CAPACITY MIN. 2x2150 kg (A)

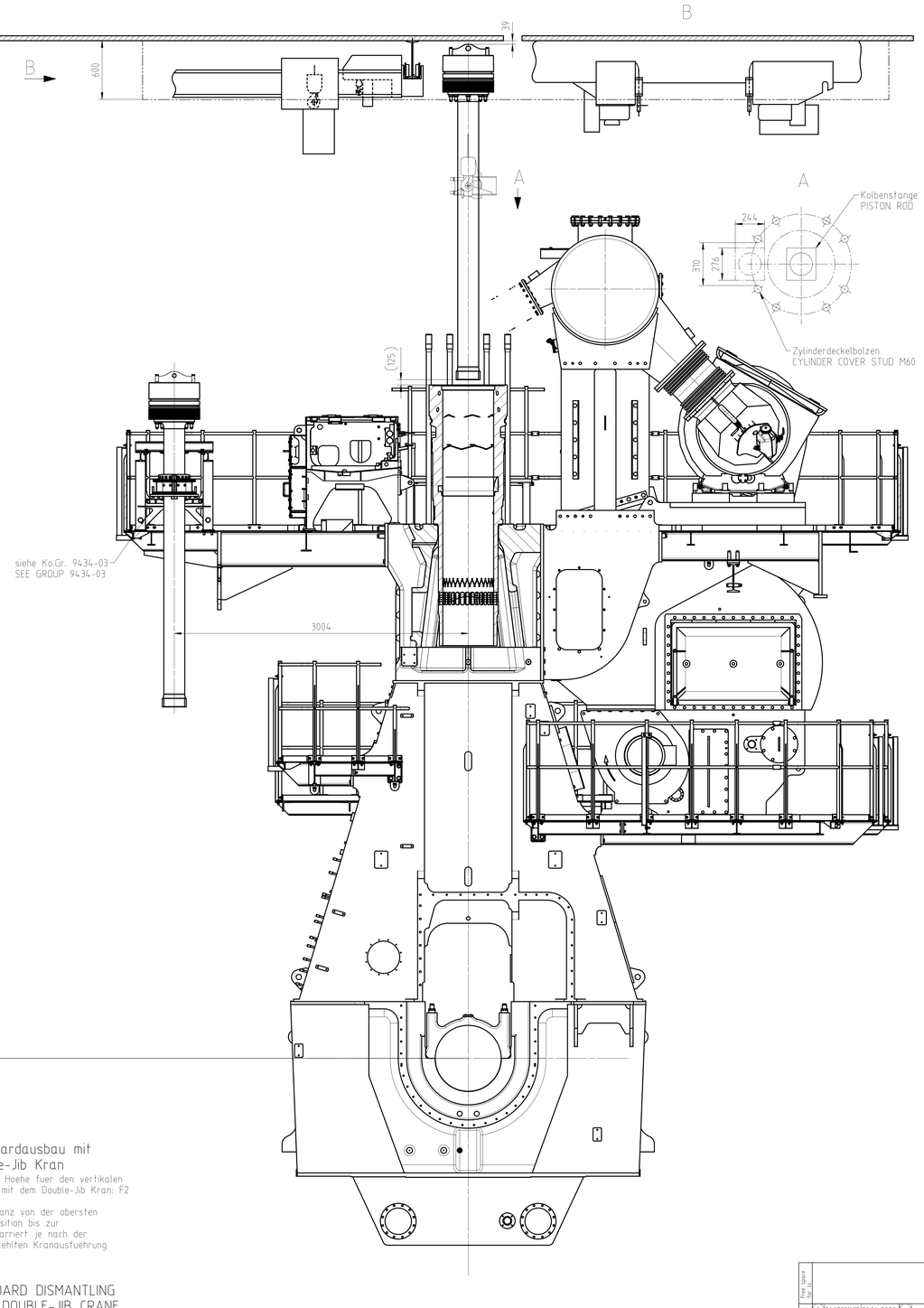


Zuganker zweiteilig bei Ersatz
TWO-PART TIE ROD FOR REPLACEMENT



DOUBLE-JIB CRANE

Krankapazitaet min. 2x2150 kg
CRANE CAPACITY MIN. 2x2150 kg (A)



Voraussetzungen fuer diese Ausbauart

- alle Zylinderdeckel-Dehnbolzen auf der Brennstoffseite muessen zweiteilig ausgefuehrt werden
- zweiteilige Zuganker im Reparaturfall
- Spezialkran (Double-JIB)
- spezielle Hebewerkzeuge fuer den Kolben
- spezielle Hebewerkzeuge fuer den Zylindereinsatz

REQUIREMENTS FOR THIS DISMANTLING METHOD

- TWO-PIECE ELASTIC STUDS FOR CYLINDER COVER ON FUEL SIDE
- TWO-PART TIE ROD IN CASE OF REPAIR
- SPECIAL CRANE (DOUBLE-JIB)
- SPECIAL LIFTING TOOLS FOR PISTON
- SPECIAL LIFTING TOOLS FOR CYLINDER LINER

Standardausbau mit Double-Jib Kran

Minimale Hoehe fuer den vertikalen Ausbau mit dem Double-Jib Kran: F2

Die Distanz von der obersten Hakenposition bis zur Decke varriert je nach der ausgewaehlten Kranausfuehrung

STANDARD DISMANTLING WITH DOUBLE-JIB CRANE

MIN. HEIGHT FOR VERTICAL REMOVAL WITH DOUBLE-JIB CRANE F2

DISTANCE BETWEEN TOP POSITION OF HOOK AND ENGINE ROOM CEILING VARIES DEPENDING ON CRANE TYPE.

FOR VERTICAL REMOVAL WITH DOUBLE JIB E/R CRANE BY FUCHS FOERDERTECHNIK AG

Appl.	Free given for ...							Q-Code XXXXX	Main Drw.
	A	EAAD091495	21.04.2020					Standard ISO; JIS	
		Number	Drawn date	Number	Drawn date	Number	Drawn date	Number	Drawn date

WIN GD Winterthur Gas & Diesel

Product X52DF

DISMANTLING DIMENSIONS

Ausbaumasse

Units mm kg | N.X. | Basic Material | Net Weight 0.001

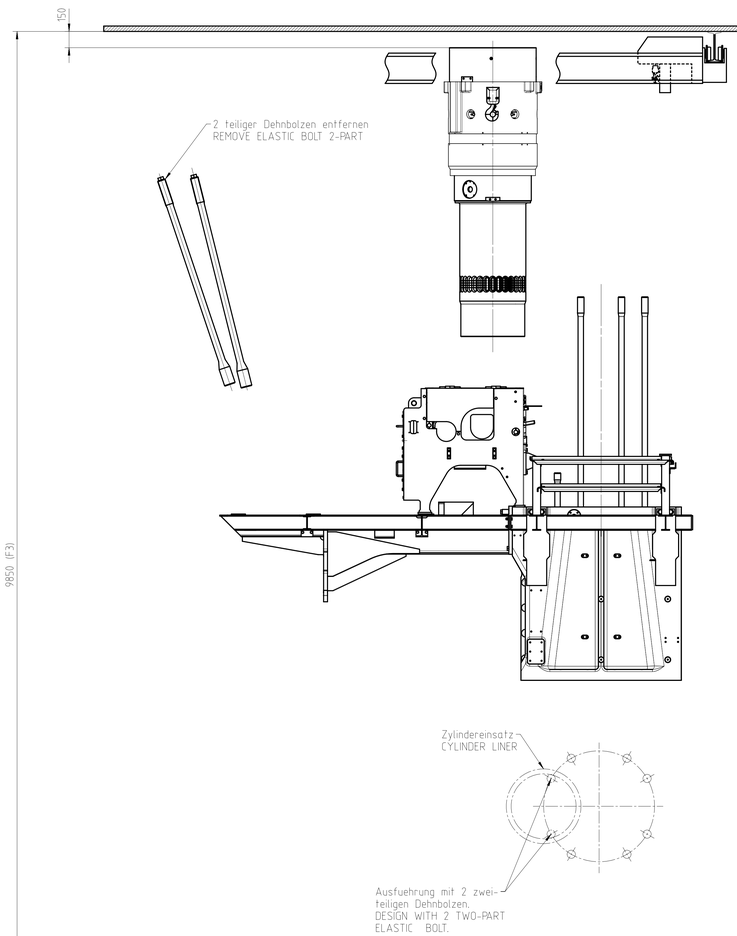
SURFACE PROTECTION SEE GROUP 0344	Made	17.01.2017	Ravindra Patil	Scale 1:20	Size A0	Page 2/3
TOLERANCING PRINCIPLE ISO8015	Chkd	20.04.2017	mkr021 Krumpl	Design Group 0812	Material ID	PAAD250126
GENERAL TOLERANCES ACCORDING TO ISO2768-mK	Appd	21.04.2017	mdx006 Dacic	Drawing ID	DAAD086338	Rev. A

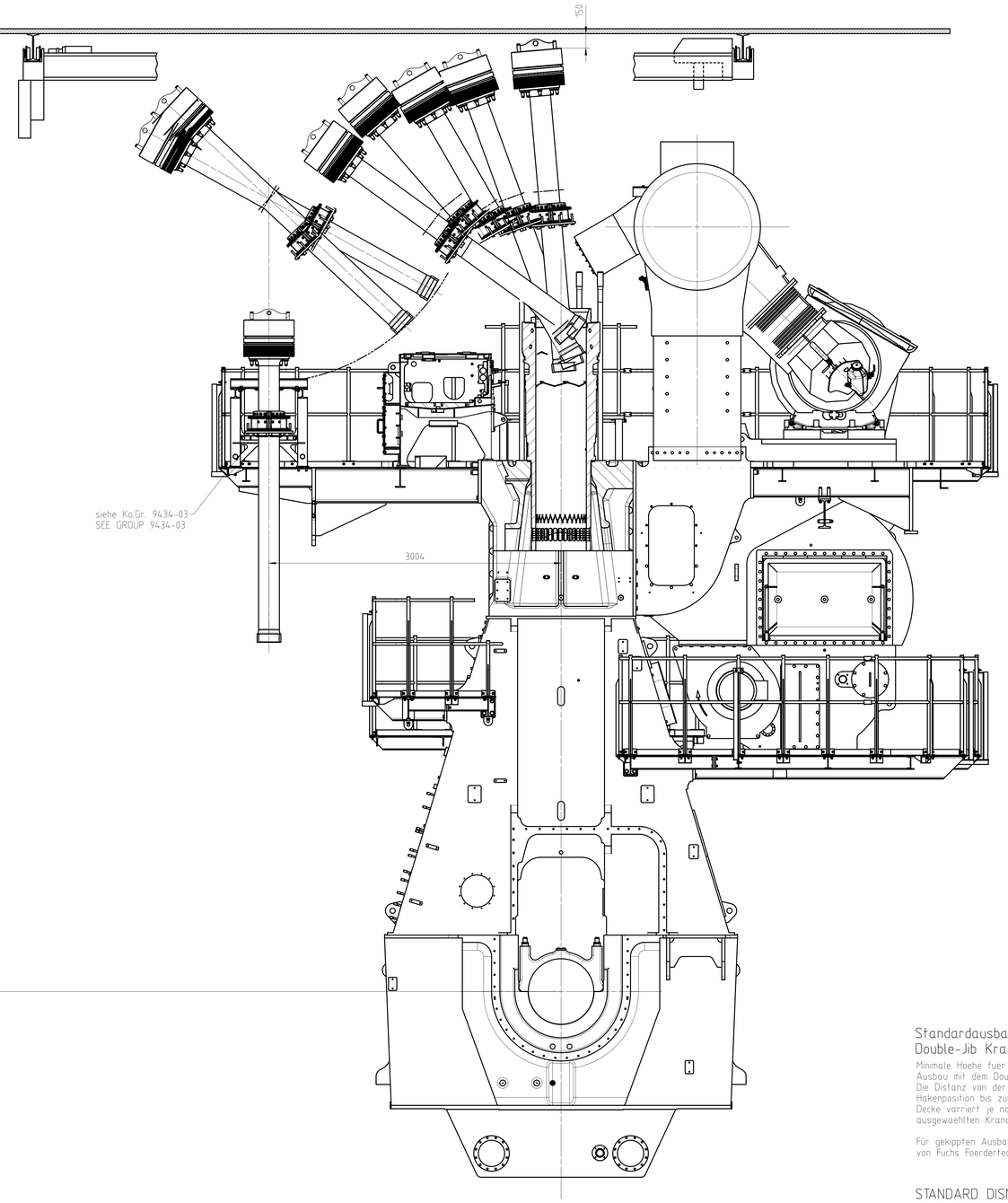
Approved / Released / Standard / Confidential

Copyright Winterthur Gas & Diesel Ltd. All rights reserved. By taking possession of the drawing the recipient recognizes and honours these rights. Neither the whole nor any part of this drawing may be used in any way for construction, fabrication, marketing or any other purpose nor copied in any way nor made accessible to third parties without the previous written consent of Winterthur Gas & Diesel Ltd.

DOUBLE-JIB CRANE

Krankapazitaet min. 2x2150 kg
CRANE CAPACITY MIN. 2x2150 kg (A)





Voraussetzungen fuer diese Ausbauart

- zweiteilige Zylinderdeckel-Dehnbolzen auf der Brennstoffseite
- zweiteilige Zuganker im Reparaturfall
- Spezialkran (DOUBLE-JIB)
- spezielle Hebewerkzeuge fuer den Zylindereinsatz und den Kolben

REQUIREMENTS FOR THIS DISMANTLING METHOD

- TWO-PIECE ELASTIC STUDS FOR CYLINDER COVER ON FUEL SIDE
- TWO-PART TIE ROD IN CASE OF REPAIR
- SPECIAL CRANE (DOUBLE-JIB)
- SPECIAL LIFTING TOOLS FOR CYLINDER LINER AND PISTON

Standardausbau mit Double-Jib Kran

Minimale Hoehe fuer den gekippten
Ausbau mit dem Double-Jib Kran: F3
Die Distanz von der obersten
Hakenposition bis zur
Decke varriert je nach der
ausgewaehlten Kranausfuehrung

Für gekippten Ausbau mit Double-Jib E/R Kran
von Fuchs Foerdertechnik AG

STANDARD DISMANTLING WITH DOUBLE-JIB CRANE

MIN. HEIGHT FOR TILTED REMOVAL WITH DOUBLE-JIB CRANE: F3
DISTANCE BETWEEN TOP POSITION OF
HOOK AND ENGINE ROOM CEILING VARIES
DEPENDING ON CRANE TYPE.

FOR TILTED REMOVAL WITH DOUBLE JIB E/R CRANE
BY: FUCHS FOERDERTECHNIK AG

Approved

Appl.	Prev. issue for								Q-Code XXXXX		Main Drw.
	A	EAAD091495	21.04.2020						Standard ISO; JIS		
		Number	Drawn date	Number	Drawn date	Number	Drawn date	Number	Drawn date		

WIN GD Winterthur Gas & Diesel

Product X52DF

DISMANTLING DIMENSIONS

Ausbaumasse

Units	mm kg	NX		Basic Material		Net Weight 0.001	
SURFACE PROTECTION SEE GROUP 0344	Made	17.01.2017	Ravindra Patil	Scale 1:20	Size A0	Page 3/3	Material ID PAAD250126
TOLERANCING PRINCIPLE ISO8015	Chkd	20.04.2017	mkr021 Krumpl	Design Group 0812	Drawing ID DAAD086338		Rev. A
GENERAL TOLERANCES ACCORDING TO ISO2768-mK	Appd	21.04.2017	mdx006 Daoc				

Copyright Winterthur Gas & Diesel Ltd. All rights reserved. By having possession of the drawing the recipient recognizes and honours these rights. Neither the whole nor any part of the drawing may be used in any way for construction, fabrication, marketing or any other purpose nor copied in any way nor made accessible to third parties without the previous written consent of Winterthur Gas & Diesel Ltd.

WinGD-8X52DF_Engine-Outline-View

TRACK CHANGES

DATE	SUBJECT	DESCRIPTION
2018-08-16	DRAWING SET	First web upload
2020-07-21	DAAD086338	Revised Dismantling Dimensions Drawing has been updated.

DISCLAIMER

© Copyright by Winterthur Gas & Diesel Ltd.
All rights reserved. No part of this document may be reproduced or copied in any form or by any means (electronic, mechanical, graphic, photocopying, recording, taping or other information retrieval systems) without the prior written permission of the copyright owner.

THIS PUBLICATION IS DESIGNED TO PROVIDE AN ACCURATE AND AUTHORITATIVE INFORMATION WITH REGARD TO THE SUBJECT-MATTER COVERED AS WAS AVAILABLE AT THE TIME OF PRINTING. HOWEVER, THE PUBLICATION DEALS WITH COMPLICATED TECHNICAL MATTERS SUITED ONLY FOR SPECIALISTS IN THE AREA, AND THE DESIGN OF THE SUBJECT-PRODUCTS IS SUBJECT TO REGULAR IMPROVEMENTS, MODIFICATIONS AND CHANGES. CONSEQUENTLY, THE PUBLISHER AND COPYRIGHT OWNER OF THIS PUBLICATION CAN NOT ACCEPT ANY RESPONSIBILITY OR LIABILITY FOR ANY EVENTUAL ERRORS OR OMISSIONS IN THIS BOOKLET OR FOR DISCREPANCIES ARISING FROM THE FEATURES OF ANY ACTUAL ITEM IN THE RESPECTIVE PRODUCT BEING DIFFERENT FROM THOSE SHOWN IN THIS PUBLICATION. THE PUBLISHER AND COPYRIGHT OWNER SHALL UNDER NO CIRCUMSTANCES BE HELD LIABLE FOR ANY FINANCIAL CONSEQUENTIAL DAMAGES OR OTHER LOSS, OR ANY OTHER DAMAGE OR INJURY, SUFFERED BY ANY PARTY MAKING USE OF THIS PUBLICATION OR THE INFORMATION CONTAINED HEREIN.