SURFACE PROTECTION SEE GROUP 0344
TOLERANCING PRINCIPLE ISO8015
GENERAL TOLERANCES ACCORDING TO ISO2768-mK

Available executions

Execution No.	Material ID
001	PTAA044715

NOTE
The above executions can be configured using the Engine Configurator.
Detailed guidance for the executions is provided within the Marine Installation Manual (MIM). If a specific execution of interest is not shown in the above table, then it may still be under development or not available. For further information or in case of a project-specific request, WinGD must be contacted directly.

This publication is designed to provide accurate and authoritative information with regard to the subject-matter covered as it was available at the time of printing. However, the publication deals with complicated technical matters suited only for specialists in the area, and the design of the subject-products is subject to regular improvements, modifications and changes. Consequently, the publisher and copyright owner of this publication cannot accept any responsibility or liability for any eventual errors or omissions in this document or for discrepancies arising from the features of any actual item in the respective product being different from those shown in this publication. The publisher and copyright owner shall under no circumstances be held liable for any financial consequential damages or other loss, or any other damage or injury, suffered by any party making use of this publication or the information contained herein.

Prod. X52DF-2.1

Change History

Rev.	Creator	Approver	Approval Date	Change ID	Change Synopsis	Activity Code	E	C
–	sna102	mhu019	19.12.2022	CNAA002926	new Design		-	-

Approved

WIN GD Winterthur Gas & Diesel

EXHAUST SYSTEM

MIDS master drawing

separate BOM available

Scale – NX

Dimension

Units [mm] [kg]

Basic Material

Net Weight 0.001

Main Design

Design Group 9726

Q-Code XXXXX

Standard WDS

Qty per A4

Item ID PTAA025617

Drawing Page/s 1/1

Copyright Winterthur Gas & Diesel Ltd. All rights reserved. By taking possession of the drawing the recipient recognizes and honours these rights. Neither the whole nor any part of this drawing may be used in any way for construction, fabrication, marketing or any other purpose nor copied in any way nor made accessible to third parties without the previous written consent of Winterthur Gas & Diesel Ltd.

SEQ NO	QTY	Item ID	Item Name / Dimension	Standard-ID	Basic Material	Net Weight
1	1	PTAA044681	EXHAUST SYSTEM with one turbocharger			0
2	1	PAAD327310	SPECIFICATION			0.001
4	1	DAAD139643	GUIDELINES			

Prod.				
	5,6,7,8 X52DF-2.1			

Change History

Rev.	Creator	Approver	Approval Date	Change ID	Change Synopsis	Activity Code	E	C
-	dki021	mhu019	23.11.2022	CNAA002662	Main Design/Drawing Introduced		-	-

WIN GD
Winterthur Gas & Diesel

EXHAUST SYSTEM

PAAD359330

Bill Of Material

Dimension

Units	[m] [kg]	Basic Material				Net Weight	0
Main Design	Yes	Design Group	9726	Q-Code	XXXXX	Standard	WDS
Qty per	Engine	A4	Item ID	PTAA044715		BOM Page/s	01/01

Copyright **Winterthur Gas & Diesel Ltd.** All rights reserved. By taking possession of the document the recipient recognizes and honours these rights. Neither the whole nor any part of this document may be used in any way for construction, fabrication, marketing or any other purpose nor copied in any way nor made accessible to third parties without the previous written consent of **Winterthur Gas & Diesel Ltd.**

Specifications which must be met:

73

OUTLET - Exhaust gas manifold waste gate

- Size and layout of connection flange is provided in the "Pipe Connection Plan"
- The pipe diameter must be selected according to the guidance as provided on the drawing "Specification for waste gate selection".
- The waste gate connection pipe, as connected to the main exhaust gas pipe, must be kept as short as possible to avoid swirl and extensive back pressure.

75

INLET - Recirculated exhaust gas turbocharger

Exhaust temperature:

- Controlled by the EGC
- Must be always below the scavenge air temperature

Exhaust gas piping:

- Piping with cones, bends and pipe connections must be flow optimised and arranged in a way to avoid condensation draining to the turbocharger suction.
- The piping between the exhaust gas cooler outlet and turbocharger inlet must be insulated to avoid condensation of the humid recirculating exhaust gas on the pipe wall.
  The same insulation standard, as used on the hot side before the cooler, must be applied on the exhaust gas return pipe accordingly.
- The exhaust gas return pipe must be purged by air in the counterflow direction through the SOV.
  The purging flow must be the total iCER casing volume, to be exchanged 4.5 times per hour with a maximum back pressure of 80 mbar.

C / 6

OUTLET - Exhaust gas return pipe condensate water drain

- Drain to the iCER waste water holding tank

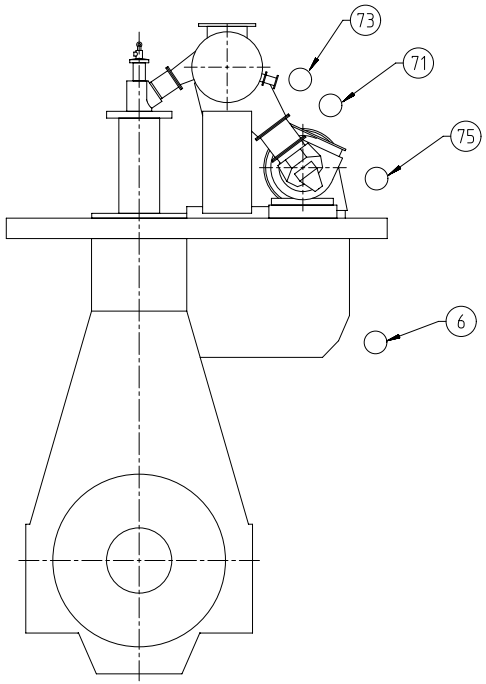

71

OUTLET - Exhaust gas turbocharger

- Exhaust gas temperature and volume flow: according to GTD
- If the iCER diesel option is selected a NOx sensor must be installed in the exhaust gas pipe between Back Pressure Valve (BPV) and turbocharger.
- The total back pressure of the exhaust gas system must be kept within the following ranges:

Diesel Tier II mode in section A and C
Design limit: From max. 30 mbar to max. 60 mbar
Operational limit: max. 80 mbar
iCER gas Tier III mode in section A and B

With exhaust gas return pipe to the TC connection from above, i.e. layout with water mist catcher
Design limit: From max. 20 mbar to max. 35 mbar
Operational limit: max. 45 mbar

With exhaust gas return pipe to the TC connection from below, i.e. compact layout without water mist catcher
Design limit: From max. 30 mbar to max. 45 mbar
Operational limit: max. 55 mbar

iCER diesel Tier III mode in section A and B
Design limit: Not relevant for layout
Operational limit: max. 55 mbar

Remark: The available back pressure range provided in this drawing refers to the differential pressure between the pipe connections #71 and #75. An additional layout back pressure of 10 mbar is caused by the water mist catcher which is integrated into the engine. In the GTD, the available back pressure range refers specifically to the back pressure between the turbocharger inlet and outlet. As a result, the GTD provides a back pressure range which is 10 mbar higher.

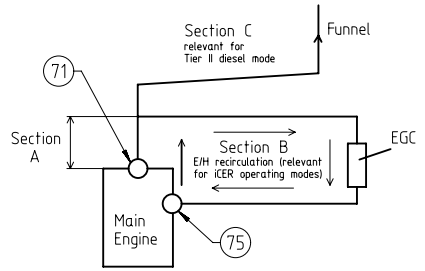

- The exhaust gas pipe must be insulated according to applicable rules, e.g. SOLAS.
- Recommended pipe dimensions in relation to the exhaust gas mass flow rates are provided by table 1 on page 2.
- The exhaust piping with cones, bends and pipe connections must be flow optimised and arranged in a way to avoid gases from accumulating.
- The piping layout must consider the thermal expansion and vibration from the turbocharger (TC) and main engine (ME). Thermal expansion of the ME is to be calculated according to the formula in MIM. TC specific thermal expansion is provided by the TC supplier.
- Explosion relief devices, examined and certified by the maker, with flameless pressure relief (rupture discs or self-closing, spring-loaded valves) must be selected and installed within the exhaust system in accordance with class requirements. The exact position and number of explosion relief devices must be determined by the system designer or the shipyard through calculation. Independently, which type of explosion relief devices is selected, the distance of the explosion relief device to gangways, working areas and system components must be at least 3 m to not endanger personeel and/or to avoid material damage.
- A continuous (extensive) exhaust gas leakage must be avoided.
- Supports (fixation points) for the mass of piping and exhaust gas system components must be installed in sufficient size and amount. Inadmissible tensions in the piping and forces acting on the turbocharger are not acceptable.
- Exhaust gas pipes of several engines must not be connected.
- Drains of adequate size and amount must be installed in the exhaust gas piping.
- When the noise level on the bridge wing exceeds the class requirement (normally 60 - 70 dB(A)) a silencer must be applied.
- During iCER operation, the recirculated exhaust gas must be cooled by EGC circulation water. This water must be cleaned and treated by the water treatment unit to fulfill the following requirements: A maximum solids content of 150 mg/l and a proper pH value (e.g. above pH 6).

Prod. X52DF-2.1

Change History

Rev.	Creator	Approver	Approval Date	Change ID	Change Synopsis	Activity Code	E	C
C	dki021	dst009	15.12.2023	CNAA004854	Drawing updated.		4	3
B	sde101	mhu019	24.03.2023	CNAA003456	Drawing Updated		4	3
A	npa101	dst009	21.12.2022	CNAA002993	Drawing Updated		4	3
-	dki021	mhu019	23.11.2022	CNAA002662	new Design		-	-

Approved

WIN GD Winterthur Gas & Diesel

EXHAUST SYSTEM
1 TC, iCER off-engine

Dimension: 1 TC, iCER off-engine

Scale -; NX; Units [mm] [kg]; Basic Material; Net Weight 0.000

SURFACE PROTECTION SEE GROUP 0344
TOLERANCING PRINCIPLE ISO8015
GENERAL TOLERANCES ACCORDING TO ISO2768-mK

Copyright Winterthur Gas & Diesel Ltd. All rights reserved. By taking possession of the drawing the recipient recognizes and honours these rights. Neither the whole nor any part of this drawing may be used in any way for construction, fabrication, marketing or any other purpose nor copied in any way nor made accessible to third parties without the previous written consent of Winterthur Gas & Diesel Ltd.

Main Design	Design Group	9726	Q-Code X X M	Standard	WDS
Qty per	A2	Item ID	PTAA044681	Drawing Page/s	1/5

SYSTEM PROPOSAL

NOTE
Further installation details and variants can be found listed in the Marine Installation Manual (MIM), which provides also the acronyms used in this drawing set. The piping symbols are explained by the piping symbol key as included in the drawing set "Various Installation Items".

Short Route
- Exhaust gas branch-off after turbocharger

Table 1: Recommended pipe dimensions in relation to exhaust gas mass flow

Exhaust Gas mass flow (mEgr from GTD) kg/s	D	E	A *13)	B
11.5 -12.9	700	500	800	*8)
12.9 - 14.4	700	500	900	
14.4 - 16.4	800	600	1000	
16.4 - 18.3	800	600	1000	
18.3 - 20.2	900	700	1000	
20.2 - 22.8	900	700	1100	
22.8 - 24.5	1000	800	1100	
24.5 - 29.2	1000	800	1200	
29.2 - 30.0	1000	800	1300	
30.0 - 34.2	1200	900	1300	
34.2 - 38.3	1200	900	1400	
38.3 - 39.6	1400	1000	1400	
39.6 - 45.5	1400	1000	1500	
45.5 - 51.2	1400	1000	1600	

Pos.	ENGINE COMPONENTS *3)
EC01	Scavenge air receiver
EC02	Turbo Charger (TC)
EC03	Exhaust gas manifold
EC04	Waste gate compensator *7) *8)
EC05	Waste gate valve
EC06	Water mist catcher (WMC)
EC07	Test chock 1 *16)
EC08	Test chock 2 *17)
EC09	Manual syphon drain
EC010	Turbocharger connection piece (cone)

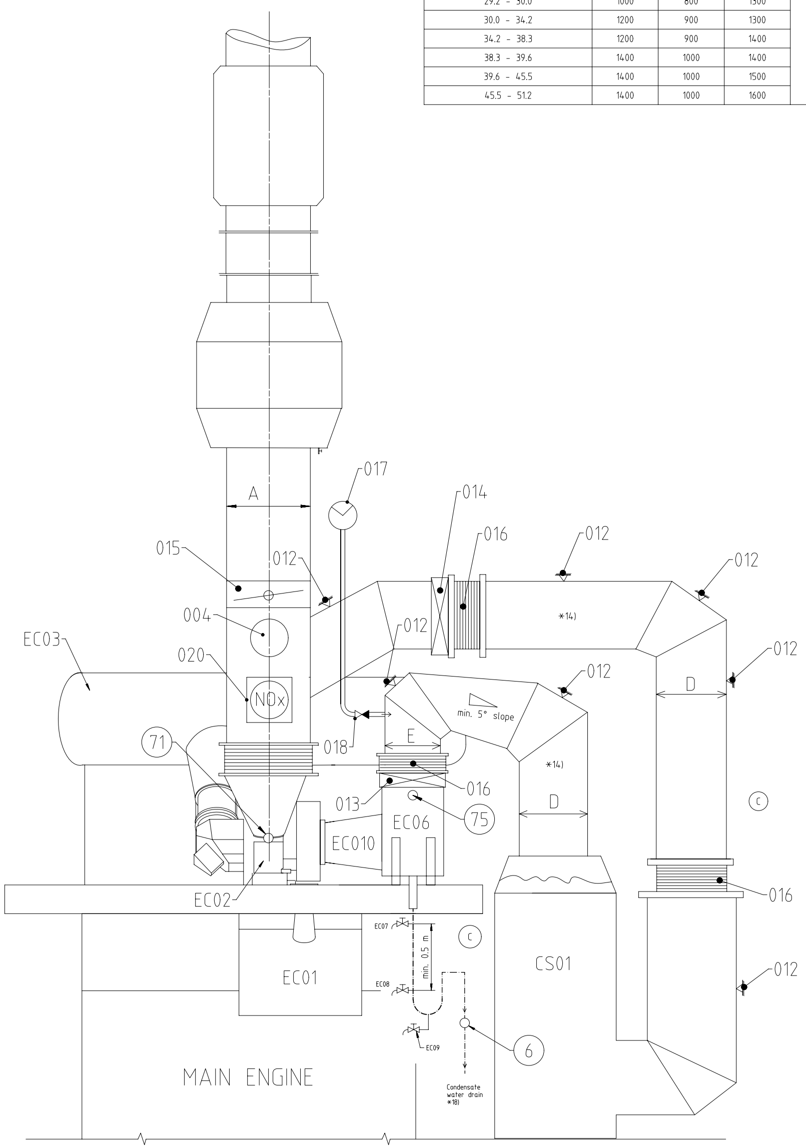

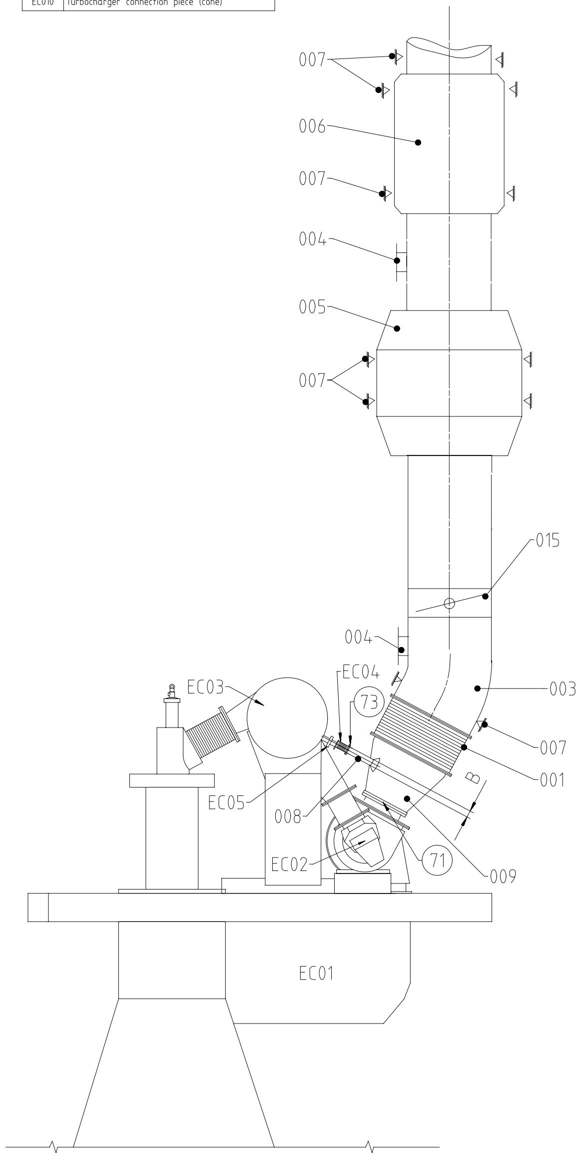

Pos.	SYSTEM COMPONENTS *2)
001	Compensator between engine and exhaust gas system *7)
003	Exhaust gas pipe
004	Explosion relief device (rupture discs or spring-loaded valves) *5)
005	Main Economiser
006	Silencer (with spark arrester) *9)
007	Support *4)
008	Waste gate pipe
009	Transition piece *6)
012	iCER support *4)
013	Flow Regulating Valve (FRV) *11)
014	Shut-off valve (SOV) *11)
015	Back Pressure Valve (BPV) *11)
016	Compensator in the exhaust system *15)
017	Purging and sealing air blower *19)
018	Non-return valve
020	NOx Sensor (as delivered by the engine builder) *20)

Pos.	ENGINE CONNECTIONS *1)
6	OUTLET - Exhaust gas return pipe condensate water drain
71	OUTLET - Exhaust gas turbocharger
73	OUTLET - Exhaust gas manifold waste gate
75	INLET - Recirculated exhaust gas turbocharger

Pos.	COMPONENTS from certified suppliers *12)
CS01	Exhaust Gas Cooler (EGC)

Remarks:

- Drain plugs and drain cocks to be installed where necessary.

*1) Refer to the "Pipe Connection Plan" for the execution and location of the engine pipe connections.

*2) To be installed by the shipyard.

*3) To be delivered by the engine builder, i.e. already equipped on engine side.

*4) The piping of the exhaust gas system must be structurally supported to withstand the mass and to minimise vibrations across the system (e.g. by connecting the support to the ship hull or otherwise).
The type of these supports (fixed or sliding type), their final amount and position have to be defined by the shipyard under consideration of system layout and requirements based on installation specific calculation.

*5) When rupture discs are installed, preventative measures must be taken to ensure that exhaust gas does not continuously flow to the out after rupture. This can be achieved with an exhaust gas duct leading to the open deck, or in the case of a twin-engine installation, by sending a control signal that initiates a shutdown of the engine. If either of these options are not possible, a self-closing, spring-loaded valve with flame arrestor must be used. This would remove the peak pressure of an explosion, while ensuring that the exhaust gas does not continuously flow out.

*6) Area ratio between outlet/inlet = 1.1...1.6, taper angle $\leq$ 40°

*7) The dimension of the expansion piece (compensator) must be defined by the shipyard in accordance with the thermal growth of the exhaust manifold and the exhaust pipe. Vibrations of the pipe after the compensator must be lower than 45 mm/s RMS (root mean square).

*8) Guidance regarding the selection of the waste gate pipe size is provided by the drawing "Specification for waste gate selection".
The waste gate pipe on the shipside is one nominal pipe size larger than the waste gate pipe on the engine side (before the compensator).

*9) Optional, installed as required to meet noise requirements.

*11) Valve size to be selected in accordance with actual exhaust gas mass flow.

*12) To be supplied by a certified supplier. Ordering to be coordinated between shipyard and engine builder.

*13) Based on a design velocity of max. 40 m/s

*14) The exhaust gas pipes upstream and downstream of the EGC must be insulated.

*15) The final amount and position have to be defined by the shipyard considering the system layout and requirements based on installation specific calculation.

*16) By opening of test cock 1 the following conditions can be ckecked:
Normal condition:
No water flow but air suction.
Abnormal condition:
Water flow, which is the indication that the drain valve is blocked in closed position.

*17) By opening of test cock 2 the following conditions can be ckecked:
Normal condition:
Water flow. Water samples can be taken.
Abnormal condition:
No water flow but air suction, which is the indication that the drain valve is blocked in open position.

*18) Condensate water drain to the iCER waste water holding tank.

*19) For the selection of the blower capacity and the arrangement of the purging and sealing air supply line refer to the guidance as provided in the MIM and iCER Installation Guideline. The purging and sealing air system is controlled by the engine control system.

*20) A dedicated air supply must be connected to the sensor to provide compressed air for cleaning, with air quality level of ISO 8573-1:2010 [1:7:2].

SURFACE PROTECTION SEE GROUP 0344
TOLERANCING PRINCIPLE ISO8015
GENERAL TOLERANCES ACCORDING TO ISO2768-mK

Change	Rev.	Creator	Approver	Approval Date	Change ID	Change Synopsis	Activity Code	E	C
	C	dki021	dst009	15.12.2023	CNAA004854	Drawing updated. Approved		4	3

Copyright Winterthur Gas & Diesel Ltd. All rights reserved. By taking possession of the drawing the recipient recognizes and honours these rights. Neither the whole nor any part of this drawing may be used in any way for construction, fabrication, marketing or any other purpose nor copied in any way nor made accessible to third parties without the previous written consent of Winterthur Gas & Diesel Ltd.

[mm] [kg] - NX A0 Item ID PTAA044681 Drawing Page/s 2/5

SYSTEM PROPOSAL

NOTE
Further installation details and variants can be found listed in the Marine Installation Manual (MIM), which provides also the acronyms used in this drawing set. The piping symbols are explained by the piping symbol key as included in the drawing set "Various Installation Items".

Long Route
- Exhaust gas branch-off after economizer

(C) Table 1: Recommended pipe dimensions in relation to exhaust gas mass flow

Exhaust Gas mass flow (mEgr from GTD) kg/s	D	E	A*12)	B
11.5 -12.9	700	500	800	*8)
12.9 - 14.4	700	500	900	
14.4 - 16.4	800	600	1000	
16.4 - 18.3	800	600	1000	
18.3 - 20.2	900	700	1000	
20.2 - 22.8	900	700	1100	
22.8 - 24.5	1000	800	1100	
24.5 - 29.2	1000	800	1200	
29.2 - 30.0	1000	800	1300	
30.0 - 34.2	1200	900	1300	
34.2 - 38.3	1200	900	1400	
38.3 - 39.6	1400	1000	1400	
39.6 - 45.5	1400	1000	1500	
45.5 - 51.2	1400	1000	1600	

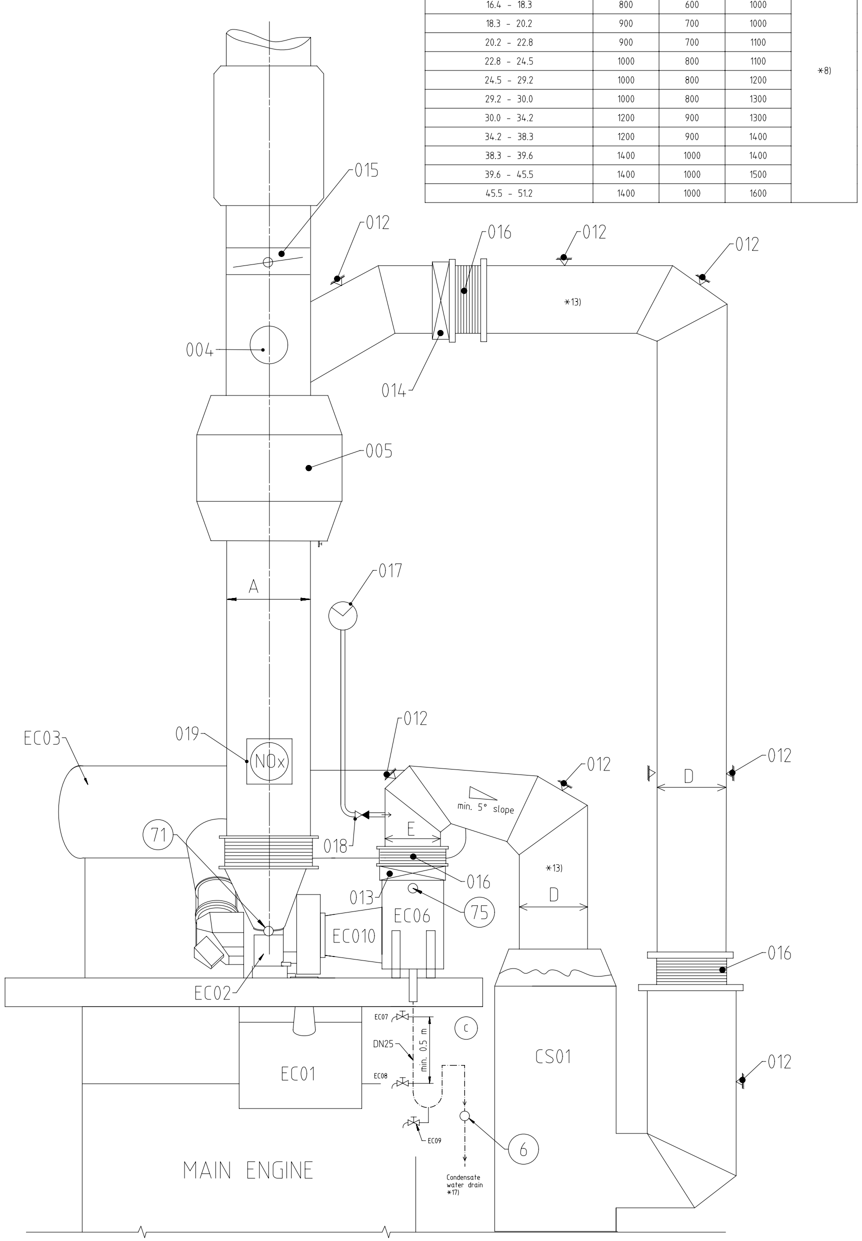

(C)

Pos.	ENGINE COMPONENTS *3)
EC01	Scavenge air receiver
EC02	Turbo Charger (TC)
EC03	Exhaust gas manifold
EC04	Waste gate compensator *7) *8)
EC05	Waste gate valve
EC06	Water mist catcher (WMC)
EC07	Test chock 1 *15)
EC08	Test chock 2 *16)
EC09	Manual syphon drain
EC010	Turbocharger connection piece (cone)

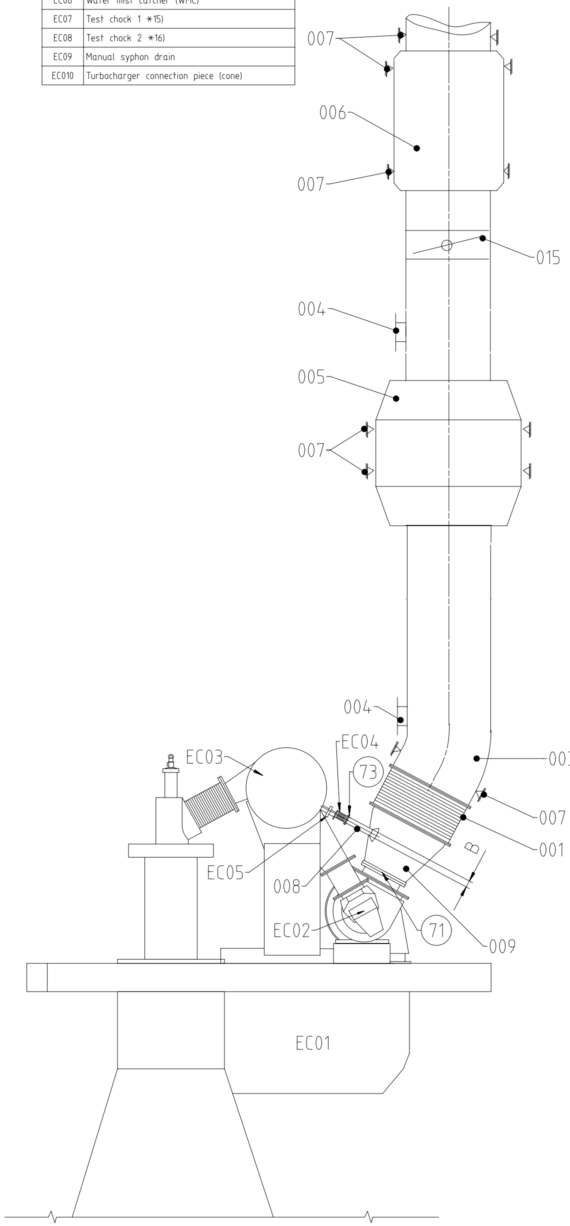

(C)

Pos.	SYSTEM COMPONENTS *2)
001	Compensator between engine and exhaust gas system *7)
003	Exhaust gas pipe
004	Explosion relief device (rupture discs or spring-loaded valves) *5)
005	Main Economiser
006	Silencer (with spark arrester) *9)
007	Support *4)
008	Waste gate pipe
009	Transition piece *6)
012	iCER support *4)
013	Flow Regulating Valve (FRV) *11)
014	Shut-off valve (SOV) *11)
015	Back Pressure Valve (BPV) *11)
016	Compensator in the exhaust system *15)
017	Purging and sealing air blower *19)
018	Non-return valve
019	NOx Sensor (as delivered by the engine builder) *19)

(C)

Pos.	ENGINE CONNECTIONS *1)
6	OUTLET - Exhaust gas return pipe condensate water drain
71	OUTLET - Exhaust gas turbocharger
73	OUTLET - Exhaust gas manifold waste gate
75	INLET - Recirculated exhaust gas turbocharger

Pos.	COMPONENTS from certified suppliers *11)
CS01	Exhaust Gas Cooler (EGC)

(C)

Remarks:

- Drain plugs and drain cocks to be installed where necessary.

*1) Refer to the "Pipe Connection Plan" for the execution and location of the engine pipe connections.

*2) To be installed by the shipyard.

*3) To be delivered by the engine builder, i.e. already equipped on engine side.

*4) The piping of the exhaust gas system must be structurally supported to withstand the mass and to minimise vibrations across the system (e.g. by connecting the support to the ship hull or otherwise).
The type of these supports (fixed or sliding type), their final amount and position have to be defined by the shipyard under consideration of system layout and requirements based on installation specific calculation.

*5) When rupture discs are installed, preventative measures must be taken to ensure that exhaust gas does not continuously flow to the out after rupture. This can be achieved with an exhaust gas duct leading to the open deck, or in the case of a twin-engine installation, by sending a control signal that initiates a shutdown of the engine. If either of these options are not possible, a self-closing, spring-loaded valve with flame arrestor must be used. This would remove the peak pressure of an explosion, while ensuring that the exhaust gas does not continuously flow out.

*6) Area ratio between outlet/inlet = 1.1...1.6, taper angle $\leq$ 40°

*7) The dimension of the expansion piece (compensator) must be defined by the shipyard in accordance with the thermal growth of the exhaust manifold and the exhaust pipe. Vibrations of the pipe after the compensator must be lower than 45 mm/s RMS (root mean square).

*8) Guidance regarding the selection of the waste gate pipe size is provided by the drawing "Specification for waste gate selection".
The waste gate pipe on the shipside is one nominal pipe size larger than the waste gate pipe on the engine side (before the compensator).

*9) Optional, installed as required to meet noise requirements.

*10) Valve size to be selected in accordance with actual exhaust gas mass flow.

*11) To be supplied by a certified supplier. Ordering to be coordinated between shipyard and engine builder.

*12) Based on a design velocity of max. 40 m/s

*13) The exhaust gas pipes upstream and downstream of the EGC must be insulated.

*14) The final amount and position have to be defined by the shipyard considering the system layout and requirements based on installation specific calculation.

*15) By opening of test cock 1 the following conditions can be ckecked:
Normal condition:
No water flow but air suction.
Abnormal condition:
Water flow, which is the indication that the drain valve is blocked in closed position.

*16) By opening of test cock 2 the following conditions can be ckecked:
Normal condition:
Water flow. Water samples can be taken.
Abnormal condition:
No water flow but air suction, which is the indication that the drain valve is blocked in open position.

*17) Condensate water drain to the iCER waste water holding tank.

*18) For the selection of the blower capacity and the arrangement of the purging and sealing air supply line refer to the guidance as provided in the MIM and iCER Installation Guideline. The purging and sealing air system is controlled by the engine control system.

*19) A dedicated air supply must be connected to the sensor to provide compressed air for cleaning, with air quality level of ISO 8573-1:2010 [1:7:2].

SURFACE PROTECTION SEE GROUP 0344
TOLERANCING PRINCIPLE ISO8015
GENERAL TOLERANCES ACCORDING TO ISO2768-mK

Change	Rev.	Creator	Approver	Approval Date	Change ID	Change Synopsis	Activity Code	E	C
	C	dki021	dst009	15.12.2023	CNAA004854	Drawing updated. Approved		4	3

Copyright Winterthur Gas & Diesel Ltd. All rights reserved. By taking possession of the drawing the recipient recognizes and honours these rights. Neither the whole nor any part of this drawing may be used in any way for construction, fabrication, marketing or any other purpose nor copied in any way nor made accessible to third parties without the previous written consent of Winterthur Gas & Diesel Ltd.

[mm] [kg] - NX A0 Item ID PTAA044681 Drawing Page/s 3/5

SYSTEM PROPOSAL

NOTE
Further installation details and variants can be found listed in the Marine Installation Manual (MIM), which provides also the acronyms used in this drawing set. The piping symbols are explained by the piping symbol key as included in the drawing set "Various Installation Items".

Short Route of compact arrangement
- Exhaust gas branch-off after turbocharger

Table 1: Recommended pipe dimensions in relation to exhaust gas mass flow

Exhaust Gas mass flow (mEGR from GTD) kg/s	D	A*13)	B
11.5 -12.9	700	800	*8)
12.9 - 14.4	700	900	
14.4 - 16.4	800	1000	
16.4 - 18.3	800	1000	
18.3 - 20.2	900	1000	
20.2 - 22.8	900	1100	
22.8 - 24.5	1000	1100	
24.5 - 29.2	1000	1200	
29.2 - 30.0	1000	1300	
30.0 - 34.2	1200	1300	
34.2 - 38.3	1200	1400	
38.3 - 39.6	1400	1400	
39.6 - 45.5	1400	1500	
45.5 - 51.2	1400	1600	

Pos.	ENGINE COMPONENTS *3)
EC01	Scavenge air receiver
EC02	Turbo Charger (TC)
EC03	Exhaust gas manifold
EC04	Waste gate compensator *7) *8)
EC05	Waste gate valve

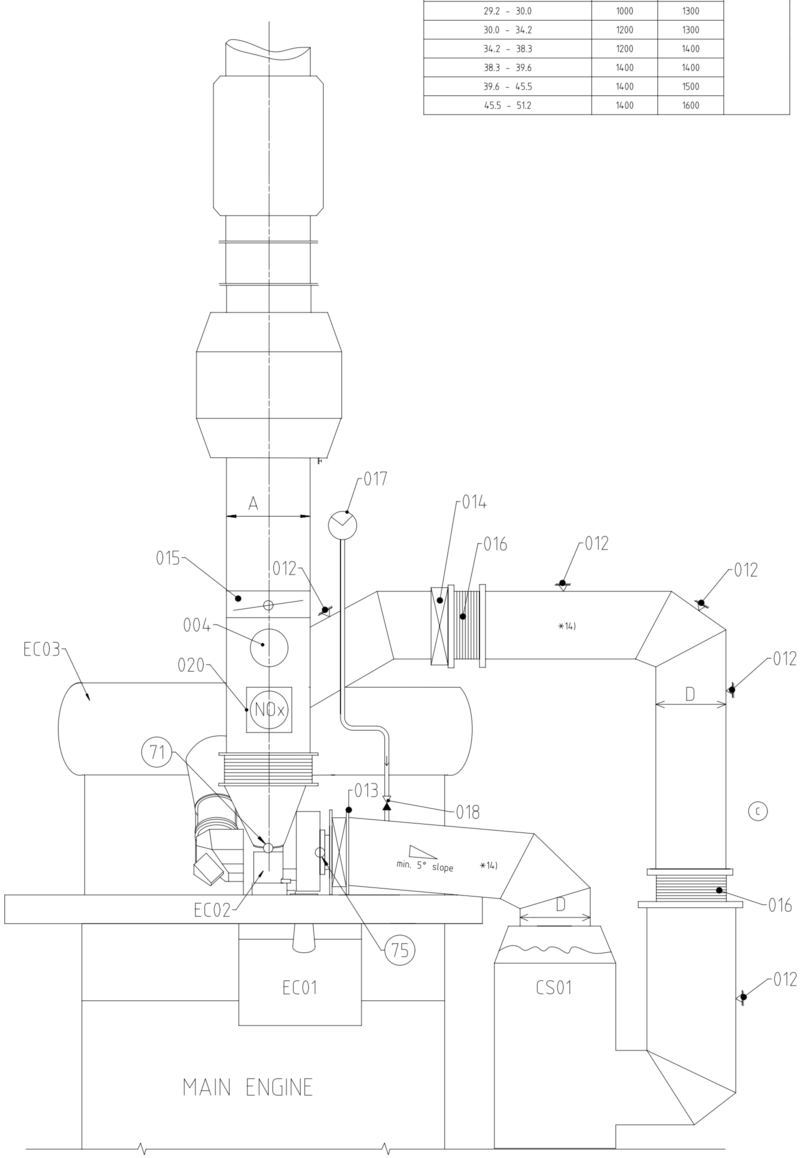

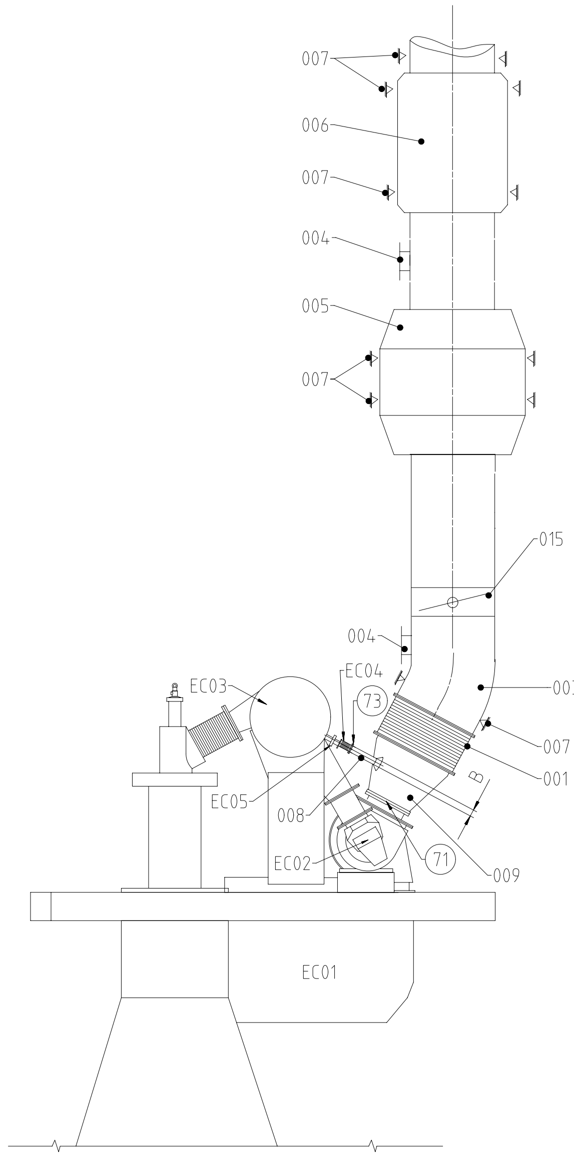

Pos.	SYSTEM COMPONENTS *2)
001	Compensator between engine and exhaust gas system *7)
003	Exhaust gas pipe
004	Explosion relief device (rupture discs or spring-loaded valves) *5)
005	Main Economiser
006	Silencer (with spark arrester) *9)
007	Support *4)
008	Waste gate pipe
009	Transition piece *6)
012	iCER support *4)
013	Flow Regulating Valve (FRV) *11)
014	Shut-off valve (SOV) *11)
015	Back Pressure Valve (BPV) *11)
016	Compensator in the exhaust system *15)
017	Purging and sealing air blower *19)
018	Non-return valve
020	NOx Sensor (as delivered by the engine builder) *20)

Pos.	ENGINE CONNECTIONS *1)
71	OUTLET - Exhaust gas turbocharger
73	OUTLET - Exhaust gas manifold waste gate
75	INLET - Recirculated exhaust gas turbocharger

Pos.	COMPONENTS from certified suppliers *12)
CS01	Exhaust Gas Cooler (EGC)

Remarks:

- Drain plugs and drain cocks to be installed where necessary.

*1) Refer to the "Pipe Connection Plan" for the execution and location of the engine pipe connections.

*2) To be installed by the shipyard.

*3) To be delivered by the engine builder, i.e. already equipped on engine side.

*4) The piping of the exhaust gas system must be structurally supported to withstand the mass and to minimise vibrations across the system (e.g. by connecting the support to the ship hull or otherwise).
The type of these supports (fixed or sliding type), their final amount and position have to be defined by the shipyard under consideration of system layout and requirements based on installation specific calculation.

*5) When rupture discs are installed, preventative measures must be taken to ensure that exhaust gas does not continuously flow to the out after rupture. This can be achieved with an exhaust gas duct leading to the open deck, or in the case of a twin-engine installation, by sending a control signal that initiates a shutdown of the engine. If either of these options are not possible, a self-closing, spring-loaded valve with flame arrestor must be used. This would remove the peak pressure of an explosion, while ensuring that the exhaust gas does not continuously flow out.

*6) Area ratio between outlet/inlet = 1.1...1.6, taper angle ≤ 40°

*7) The dimension of the expansion piece (compensator) must be defined by the shipyard in accordance with the thermal growth of the exhaust manifold and the exhaust pipe. Vibrations of the pipe after the compensator must be lower than 45 mm/s RMS (root mean square).

*8) Guidance regarding the selection of the waste gate pipe size is provided by the drawing "Specification for waste gate selection".
The waste gate pipe on the shipside is one nominal pipe size larger than the waste gate pipe on the engine side (before the compensator).

*9) Optional, installed as required to meet noise requirements.

*11) Valve size to be selected in accordance with actual exhaust gas mass flow.

*12) To be supplied by a certified supplier. Ordering to be coordinated between shipyard and engine builder.

*13) Based on a design velocity of max. 40 m/s

*14) The exhaust gas pipes upstream and downstream of the EGC must be insulated.

*15) The final amount and position have to be defined by the shipyard considering the system layout and requirements based on installation specific calculation.

*19) For the selection of the blower capacity and the arrangement of the purging and sealing air supply line refer to the guidance as provided in the MIM and iCER Installation Guideline. The purging and sealing air system is controlled by the engine control system.

*20) A dedicated air supply must be connected to the sensor to provide compressed air for cleaning, with air quality level of ISO 8573-1:2010 [1:7:2].

SURFACE PROTECTION SEE GROUP 0344
TOLERANCING PRINCIPLE ISO8015
GENERAL TOLERANCES ACCORDING TO ISO2768-mK

Change	Rev.	Creator	Approver	Approval Date	Change ID	Change Synopsis
	C	dki021	dst009	15.12.2023	CNAA004854	Drawing updated.

Copyright Winterthur Gas & Diesel Ltd. All rights reserved. By taking possession of the drawing the recipient recognizes and honours these rights. Neither the whole nor any part of this drawing may be used in any way for construction, fabrication, marketing or any other purpose nor copied in any way nor made accessible to third parties without the previous written consent of Winterthur Gas & Diesel Ltd.

[mm] [kg] - NX A0 Approved Activity Code 4 E 3 C

Item ID PTAA044681 Drawing Page/s 4/5

SYSTEM PROPOSAL

NOTE
Further installation details and variants can be found listed in the Marine Installation Manual (MIM), which provides also the acronyms used in this drawing set. The piping symbols are explained by the piping symbol key as included in the drawing set "Various Installation Items".

Long Route of compact arrangement
- Exhaust gas branch-off after economizer

Table 1: Recommended pipe dimensions in relation to exhaust gas mass flow

Exhaust Gas mass flow (mEgr from GTD) kg/s	D	A*12)	B
11.5 -12.9	700	800	*8)
12.9 - 14.4	700	900	
14.4 - 16.4	800	1000	
16.4 - 18.3	800	1000	
18.3 - 20.2	900	1000	
20.2 - 22.8	900	1100	
22.8 - 24.5	1000	1100	
24.5 - 29.2	1000	1200	
29.2 - 30.0	1000	1300	
30.0 - 34.2	1200	1300	
34.2 - 38.3	1200	1400	
38.3 - 39.6	1400	1400	
39.6 - 45.5	1400	1500	
45.5 - 51.2	1400	1600	

Pos.	ENGINE COMPONENTS *3)
EC01	Scavenge air receiver
EC02	Turbo Charger (TC)
EC03	Exhaust gas manifold
EC04	Waste gate compensator *7) *8)
EC05	Waste gate valve

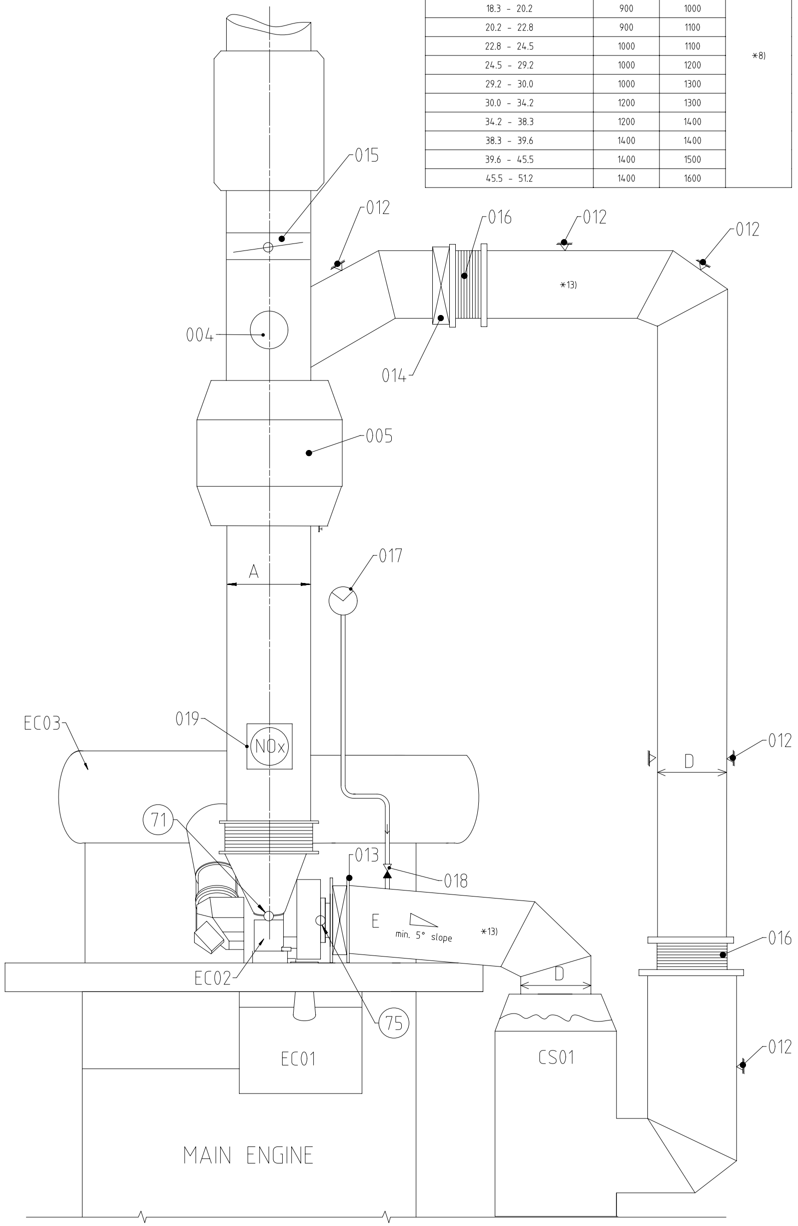

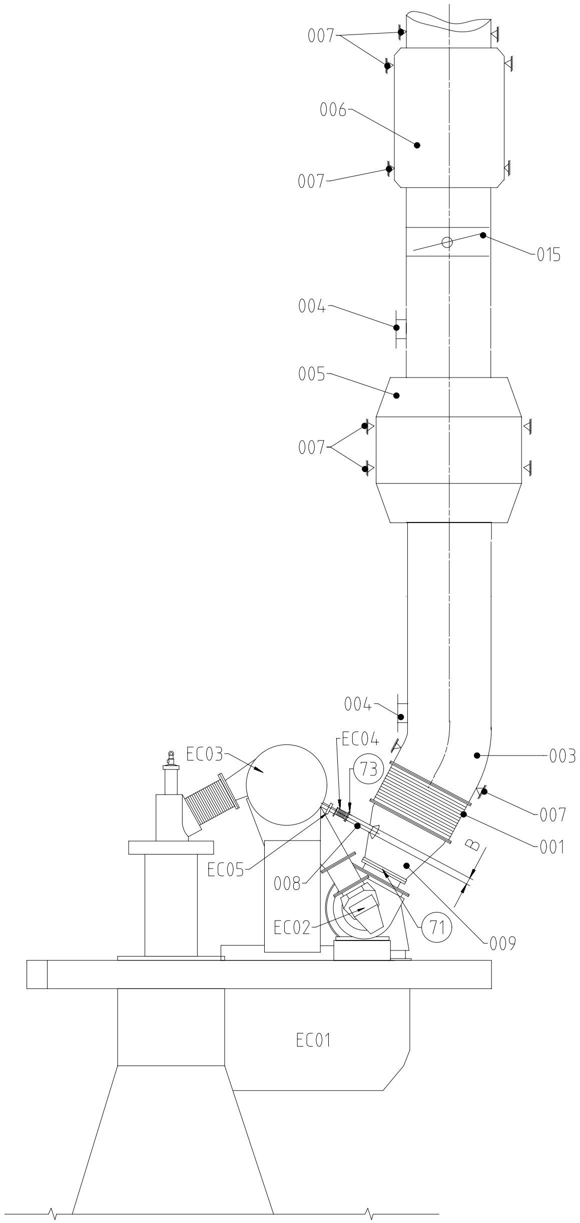

Pos.	SYSTEM COMPONENTS *2)
001	Compensator between engine and exhaust gas system *7)
003	Exhaust gas pipe
004	Explosion relief device (rupture discs or spring-loaded valves) *5)
005	Main Economiser
006	Silencer (with spark arrester) *9)
007	Support *4)
008	Waste gate pipe
009	Transition piece *6)
012	iCER support *4)
013	Flow Regulating Valve (FRV) *11)
014	Shut-off valve (SOV) *11)
015	Back Pressure Valve (BPV) *11)
016	Compensator in the exhaust system *15)
017	Purging and sealing air blower *19)
018	Non-return valve
019	NOx Sensor (as delivered by the engine builder) *19)

Pos.	ENGINE CONNECTIONS *1)
71	OUTLET - Exhaust gas turbocharger
73	OUTLET - Exhaust gas manifold waste gate
75	INLET - Recirculated exhaust gas turbocharger

Pos.	COMPONENTS from certified suppliers *11)
CS01	Exhaust Gas Cooler (EGC)

Remarks:

- Drain plugs and drain cocks to be installed where necessary.

*1) Refer to the "Pipe Connection Plan" for the execution and location of the engine pipe connections.

*2) To be installed by the shipyard.

*3) To be delivered by the engine builder, i.e. already equipped on engine side.

*4) The piping of the exhaust gas system must be structurally supported to withstand the mass and to minimise vibrations across the system (e.g. by connecting the support to the ship hull or otherwise).
The type of these supports (fixed or sliding type), their final amount and position have to be defined by the shipyard under consideration of system layout and requirements based on installation specific calculation.

*5) When rupture discs are installed, preventative measures must be taken to ensure that exhaust gas does not continuously flow to the out after rupture. This can be achieved with an exhaust gas duct leading to the open deck, or in the case of a twin-engine installation, by sending a control signal that initiates a shutdown of the engine. If either of these options are not possible, a self-closing, spring-loaded valve with flame arrestor must be used. This would remove the peak pressure of an explosion, while ensuring that the exhaust gas does not continuously flow out.

*6) Area ratio between outlet/inlet = 1.1...1.6, taper angle ≤ 40°

*7) The dimension of the expansion piece (compensator) must be defined by the shipyard in accordance with the thermal growth of the exhaust manifold and the exhaust pipe. Vibrations of the pipe after the compensator must be lower than 45 mm/s RMS (root mean square).

*8) Guidance regarding the selection of the waste gate pipe size is provided by the drawing "Specification for waste gate selection".
The waste gate pipe on the shipside is one nominal pipe size larger than the waste gate pipe on the engine side (before the compensator).

*9) Optional, installed as required to meet noise requirements.

*10) Valve size to be selected in accordance with actual exhaust gas mass flow.

*11) To be supplied by a certified supplier. Ordering to be coordinated between shipyard and engine builder.

*12) Based on a design velocity of max. 40 m/s

*13) The exhaust gas pipes upstream and downstream of the EGC must be insulated.

*14) The final amount and position have to be defined by the shipyard considering the system layout and requirements based on installation specific calculation.

*18) For the selection of the blower capacity and the arrangement of the purging and sealing air supply line refer to the guidance as provided in the MIM and iCER Installation Guideline. The purging and sealing air system is controlled by the engine control system.

*19) A dedicated air supply must be connected to the sensor to provide compressed air for cleaning, with air quality level of ISO 8573-1:2010 [1:7:2].

SURFACE PROTECTION SEE GROUP 0344
TOLERANCING PRINCIPLE ISO8015
GENERAL TOLERANCES ACCORDING TO ISO2768-mK

Change	Rev.	Creator	Approver	Approval Date	Change ID	Change Synopsis	Activity Code		
	C	dki021	dst009	15.12.2023	CNAA004854	Drawing updated. Approved		4	3
								E	C

Copyright Winterthur Gas & Diesel Ltd. All rights reserved. By taking possession of the drawing the recipient recognizes and honours these rights. Neither the whole nor any part of this drawing may be used in any way for construction, fabrication, marketing or any other purpose nor copied in any way nor made accessible to third parties without the previous written consent of Winterthur Gas & Diesel Ltd.

[mm] [kg] - NX A0 Item ID PTAA044681 Drawing Page/s 5/5

NOT VALID for new projects

The following pages are provided only as reference
for projects which had been contracted before April 2022

NOT VALID for new projects

SURFACE PROTECTION SEE GROUP 0344
TOLERANCING PRINCIPLE ISO8015
GENERAL TOLERANCES ACCORDING TO ISO2768-mK

Available executions

Execution No.	Material ID	Cylinder No.	Attribute 1: Turbocharger amount	
			1	2
001	PAAD359330	5-7	X	

NOTE
The above executions can be configured using the Engine Configurator.
Detailed guidance for the executions is provided within the Marine Installation Manual (MIM). If a specific execution of interest is not shown in the above table, then it may still be under development or not available. For further information or in case of a project-specific request, WinGD must be contacted directly.

This publication is designed to provide accurate and authoritative information with regard to the subject-matter covered as it was available at the time of printing. However, the publication deals with complicated technical matters suited only for specialists in the area, and the design of the subject-products is subject to regular improvements, modifications and changes. Consequently, the publisher and copyright owner of this publication cannot accept any responsibility or liability for any eventual errors or omissions in this document or for discrepancies arising from the features of any actual item in the respective product being different from those shown in this publication. The publisher and copyright owner shall under no circumstances be held liable for any financial consequential damages or other loss, or any other damage or injury, suffered by any party making use of this publication or the information contained herein.

NOT VALID FOR NEW PROJECTS !
Provided only as reference for projects contracted before April 2022

Prod. X52DF-2.1

Change History

Rev.	Creator	Approver	Approval Date	Change ID	Change Synopsis	Activity Code	E	C
-	sna102				new Design			

WIN GD
Winterthur Gas & Diesel

EXHAUST SYSTEM
MIDS master drawing

separate BOM available

Dimension

Scale -	NX	Units [mm] [kg]	Basic Material	Net Weight 0.001
Main Design	Design Group 9726	Q-Code XXXXX	Standard WDS	
Qty per	A4	Item ID PTAA025617	Drawing Page/s 1/1	

Copyright Winterthur Gas & Diesel Ltd. All rights reserved. By taking possession of the drawing the recipient recognizes and honours these rights. Neither the whole nor any part of this drawing may be used in any way for construction, fabrication, marketing or any other purpose nor copied in any way nor made accessible to third parties without the previous written consent of Winterthur Gas & Diesel Ltd.

SEQ NO	QTY	Item ID	Item Name / Dimension	Standard-ID	Basic Material	Net Weight
1	1	PTAA005017	Exhaust System with one turbocharger			0.001
2	1	PAAD327310	SPECIFICATION			0.001
4	1	DAAD139643	GUIDELINES			

NOT VALID FOR NEW PROJECTS !
Provided only as reference for projects contracted before April 2022

Prod.	5,6,7 X52DF-2.1							

Change History

Rev.	Creator	Approver	Approval Date	Change ID	Change Synopsis	Activity Code	E	C
B	mhu019	dst009	14.07.2021	CNAA000233	drawing updated		-	-
A	mhu019	dst009	05.02.2021	EAAD096015	Legacy information. See corresponding ChangeNotice		4	3
-	dki021	mhu019	08.12.2020		-		-	-

WIN GD
Winterthur Gas & Diesel

EXHAUST SYSTEM

PAAD359330

Bill Of Material

Dimension

Copyright **Winterthur Gas & Diesel Ltd.** All rights reserved. By taking possession of the document the recipient recognizes and honours these rights. Neither the whole nor any part of this document may be used in any way for construction, fabrication, marketing or any other purpose nor copied in any way nor made accessible to third parties without the previous written consent of **Winterthur Gas & Diesel Ltd.**

Units	[m] [kg]	Basic Material				Net Weight	0.001
Main Design	Yes	Design Group	9726	Q-Code	XXXXX	Standard	WDS
Qty per	Engine	A4	Item ID	PAAD359330		BOM Page/s	01/01

Specifications which must be met:

73 OUTLET - Exhaust gas manifold waste gate

- Size and layout of connection flange is provided in the "Pipe Connection Plan"
- The pipe diameter must be selected according to the guidance as provided on the drawing "Specification for waste gate selection".
- The waste gate connection pipe, as connected to the main exhaust gas pipe, must be kept as short as possible to avoid swirl and extensive back pressure.

75 INLET - Recirculated exhaust gas turbocharger

Exhaust temperature:

- Controlled by the EGC
- Must be always below the scavenge air temperature

Exhaust gas piping:

- Piping with cones, bends and pipe connections must be flow optimised and arranged in a way to avoid condensation draining to the turbocharger suction.
- The piping between the exhaust gas cooler outlet and turbocharger inlet must be insulated to avoid condensation of the humid recirculating exhaust gas on the pipe wall. The same insulation standard, as used on the hot side before the cooler, must be applied on the exhaust gas return pipe accordingly.

44 OUTLET - EGC purge air supply

The purge air supply line must be connected upstream from the water mist catcher to the EGC exhaust gas return pipe. For the detailed layout of the connection and installation variants please refer to "The iCER Installation Guideline".

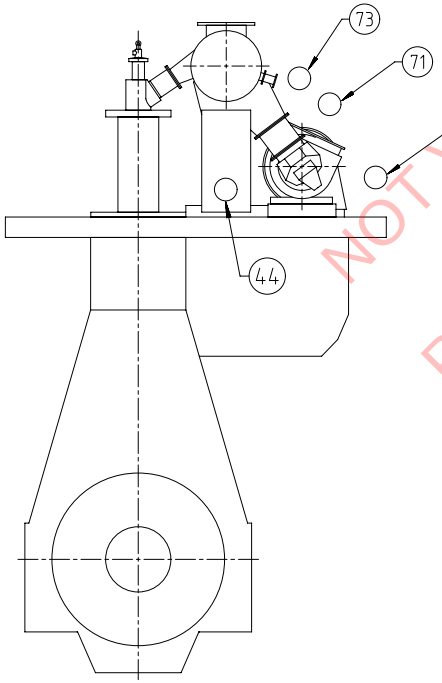

71 OUTLET - Exhaust gas turbocharger

D

- Exhaust gas temperature and volume flow: according to GTD
- The total back pressure of the exhaust gas system must be kept within the following ranges:

Diesel Tier II mode in section A and C
Design limit: From max. 30 mbar to max. 60 mbar
Operational limit: max. 80 mbar

iCER gas Tier III mode in section A and B
Design limit: From max. 20 mbar to max. 35 mbar
Operational limit: max. 45 mbar

iCER diesel Tier III mode in section A and B
Design limit: Not relevant for layout
Operational limit: max. 55 mbar

Remark: The available back pressure range provided in this drawing refers to the differential pressure between the pipe connections #71 and #75. An additional layout back pressure of 10 mbar is caused by the water mist catcher which is integrated into the engine. In the GTD, the available back pressure range refers specifically to the back pressure between the turbocharger inlet and outlet. As a result, the GTD provides a back pressure range which is 10 mbar higher.

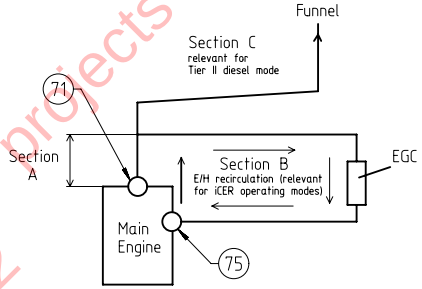

- The exhaust gas pipe must be insulated according to applicable rules, e.g. SOLAS.
- Recommended pipe dimensions in relation to the exhaust gas mass flow rates are provided by table 1 on page 2.
- The exhaust piping with cones, bends and pipe connections must be flow optimised and arranged in a way to avoid gases from accumulating.
- The piping layout must consider the thermal expansion and vibration from the turbocharger (TC) and main engine (ME). Thermal expansion of the ME is to be calculated according to the formula in MIM. TC specific thermal expansion is provided by the TC supplier.
- Explosion relief devices, examined and certified by the maker, with flameless pressure relief (rupture discs or self-closing, spring-loaded valves) must be selected and installed within the exhaust system in accordance with class requirements. The exact position and number of explosion relief devices must be determined by the system designer or the shipyard through calculation. Independently, which type of explosion relief devices is selected, the distance of the explosion relief device to gangways, working areas and system components must be at least 3 m to not endanger personeel and/or to avoid material damage.
- A continuous (extensive) exhaust gas leakage must be avoided.
- Supports (fixation points) for the mass of piping and exhaust gas system components must be installed in sufficient size and amount. Inadmissible tensions in the piping and forces acting on the turbocharger are not acceptable.
- Exhaust gas pipes of several engines must not be connected.
- Drains of adequate size and amount must be installed in the exhaust gas piping.
- When the noise level on the bridge wing exceeds the class requirement (normally 60 - 70 dB(A)) a silencer must be applied.
- During iCER operation, the recirculated exhaust gas must be cooled by EGC circulation water. This water must be cleaned and treated by the water treatment unit to fulfill the following requirements: A maximum solids content of 150 mg/l and a proper pH value (e.g. above pH 6).

NOT VALID FOR NEW PROJECTS !
Provided only as reference for projects contracted before April 2022

Prod. X52DF-2.1

Change History

Rev.	Creator	Approver	Approval Date	Change ID	Change Synopsis	Activity Code	E	C
D	npa101	dst009	20.12.2022	CNAA002993	Drawing Updated		4	3
C	dki021	mhu019	23.11.2022	CNAA002662	Drawing Updated		4	3
B	sna102	mhu019	08.03.2022	CNAA001599	Drawing Updated		4	3
-	mhu019	dst009	15.07.2021	CNAA000374	new Design		-	-

Approved

WIN GD Winterthur Gas & Diesel

EXHAUST SYSTEM

Dimension: with one turbocharger

Scale 1:1 | NX | Units [mm] [kg] | Basic Material | Net Weight 0.000

SURFACE PROTECTION SEE GROUP 0344
TOLERANCING PRINCIPLE ISO8015
GENERAL TOLERANCES ACCORDING TO ISO2768-mK

Copyright Winterthur Gas & Diesel Ltd. All rights reserved. By taking possession of the drawing the recipient recognizes and honours these rights. Neither the whole nor any part of this drawing may be used in any way for construction, fabrication, marketing or any other purpose nor copied in any way nor made accessible to third parties without the previous written consent of Winterthur Gas & Diesel Ltd.

Main Design	Design Group 9726	Q-Code XXXXX	Standard WDS		
Qty per	A2	Item ID PTAA005017	Drawing Page/s 1/3		

SYSTEM PROPOSAL

NOTE
Further installation details and variants can be found listed in the Marine Installation Manual (MIM), which provides also the acronyms used in this drawing set. The piping symbols are explained by the piping symbol key as included in the drawing set "Various Installation Items".

Short Route
- Exhaust gas branch-off after turbocharger

Table 1: Recommended pipe dimensions in relation to exhaust gas mass flow

Exhaust Gas mass flow (turbine flow from GTD) kg/s	EGC Size	D	E	A*15)	B
11.5 - 12.9	EGC14	700	500	800	*9)
12.9 - 14.4	EGC14	700	500	900	
14.4 - 16.4	EGC18	800	600	1000	
16.4 - 18.3	EGC18	800	600	1000	
18.3 - 20.2	EGC23	900	700	1000	
20.2 - 22.8	EGC23	900	700	1100	
22.8 - 24.5	EGC30	1000	800	1100	
24.5 - 29.2	EGC30	1000	800	1200	
29.2 - 30.0	EGC30	1000	800	1300	
30.0 - 34.2	EGC38	1200	900	1300	
34.2 - 38.3	EGC38	1200	900	1400	
38.3 - 39.6	EGC51	1400	1000	1400	
39.6 - 45.5	EGC51	1400	1000	1500	
45.5 - 51.2	EGC51	1400	1000	1600	

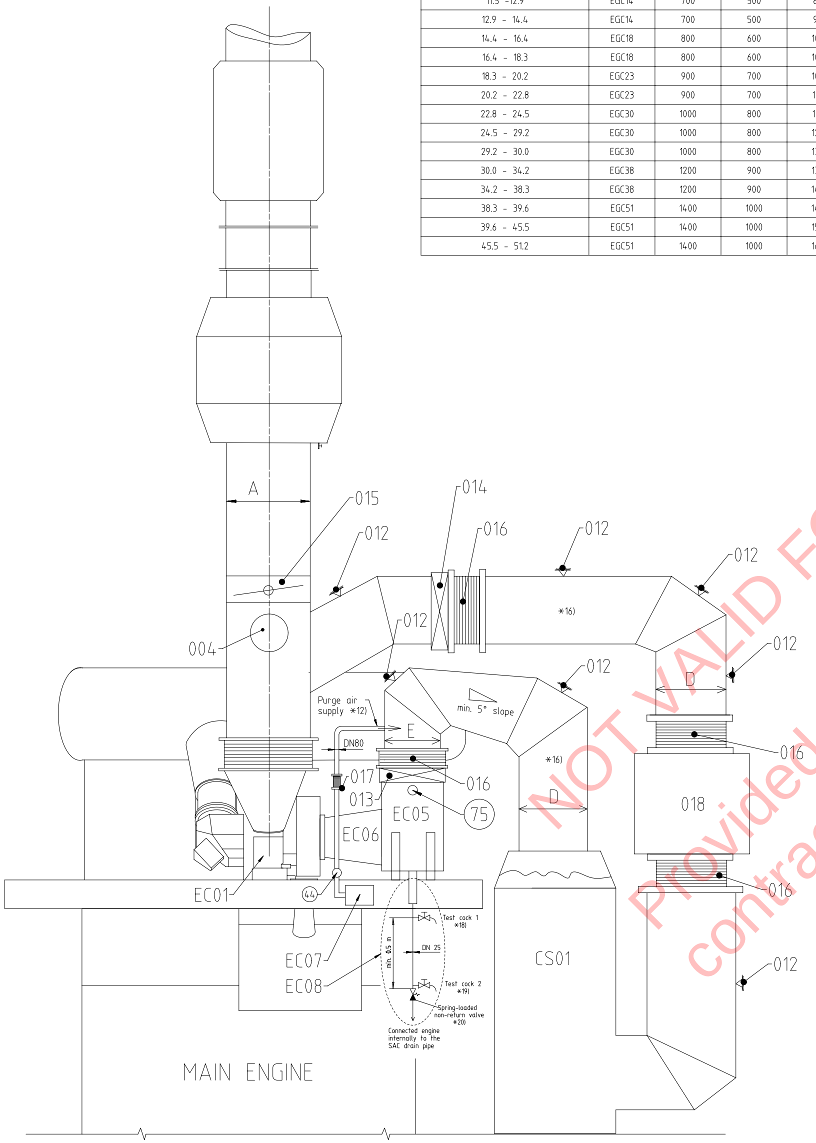

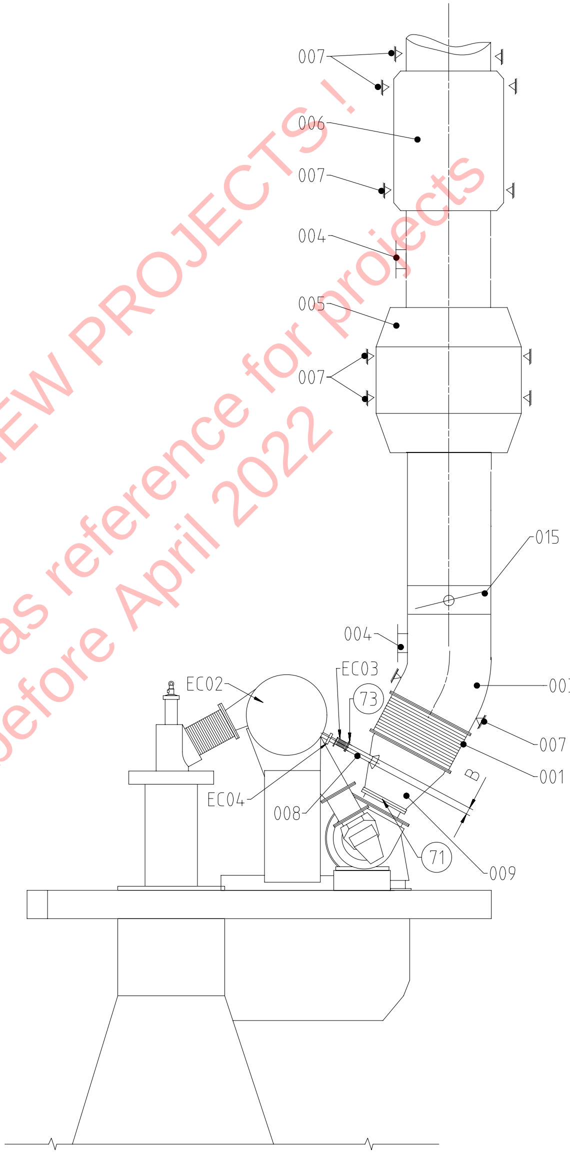

NOT VALID FOR NEW PROJECTS !
Provided only as reference for projects contracted before April 2022

Pos.	SYSTEM COMPONENTS *2)
001	Compensator between engine and exhaust gas system *8)
003	Exhaust gas pipe
004	Explosion relief device (rupture discs or spring-loaded valves) *5)
005	Main Economiser
006	Silencer (with spark arrester) *10)
007	Support *4)
008	Waste gate pipe
009	Transition piece *6)
012	iCER support *4)
013	Flow Regulating Valve (FRV) *13)
014	Shut-off valve (SOV) *13)
015	Back Pressure Valve (BPV) *13)
016	Compensator in the exhaust system *17)
017	Compensator in the purge air supply pipe *12)
018	Additional Economiser *11)

Pos.	ENGINE CONNECTIONS *1)
71	OUTLET - Exhaust gas turbocharger
73	OUTLET - Exhaust gas manifold waste gate
75	INLET - Recirculated exhaust gas turbocharger
44	OUTLET - EGC purge air supply

Pos.	ENGINE COMPONENTS *3)
EC01	Turbocharger
EC02	Exhaust gas manifold
EC03	Waste gate compensator *8) *9)
EC04	Waste gate valve
EC05	Water mist catcher (WMC)
EC06	Turbocharger connection piece (cone)
EC07	Engine mounted purging and sealing air blower
EC08	Condensate drain collection pocket with drain pipe, check valves and relief valve

Pos.	COMPONENTS from certified suppliers *14)
CS01	Exhaust Gas Cooler (EGC)

Remarks:

- Drain plugs and drain cocks to be installed where necessary.

*1) Refer to the "Pipe Connection Plan" for the execution and location of the engine pipe connections.

*2) To be installed by the shipyard.

*3) To be delivered by the engine builder, i.e. already equipped on engine side.

*4) The piping of the exhaust gas system must be structurally supported to withstand the mass and to minimise vibrations across the system (e.g. by connecting the support to the ship hull or otherwise).
The type of these supports (fixed or sliding type), their final amount and position have to be defined by the shipyard under consideration of system layout and requirements based on installation specific calculation.

*5) When rupture discs are installed, preventative measures must be taken to ensure that exhaust gas does not continuously flow to the out after rupture. This can be achieved with an exhaust gas duct leading to the open deck, or in the case of a twin-engine installation, by sending a control signal that initiates a shutdown of the engine. If either of these options are not possible, a self-closing, spring-loaded valve with flame arrestor must be used. This would remove the peak pressure of an explosion, while ensuring that the exhaust gas does not continuously flow out.

*6) Area ratio between outlet/inlet = 1.1...1.6, taper angle $\leq$ 40°

*8) The dimension of the expansion piece (compensator) must be defined by the shipyard in accordance with the thermal growth of the exhaust manifold and the exhaust pipe. Vibrations of the pipe after the compensator must be lower than 45 mm/s RMS (root mean square).

*9) Guidance regarding the selection of the waste gate pipe size is provided by the drawing "Specification for waste gate selection".
The waste gate pipe on the shipside is one nominal pipe size larger than the waste gate pipe on the engine side (before the compensator).

*10) Optional, installed as required to meet noise requirements.

*11) Optional, in combination with the main economiser if ship's steam demand cannot be covered by the economiser in the upper exhaust gas pipe after the back pressure valve.

*12) The purge air supply line must be connected upstream from the water mist catcher to the EGC exhaust gas return pipe. A compensator must be applied with the shown layout. Other installation variants, as shown in "The iCER Installation Guideline", e.g. with connection via intermediate piece between water mist catcher and exhaust pipe and without compensator, are possible.

*13) Valve size to be selected in accordance with actual exhaust gas mass flow.

*14) To be supplied by a certified supplier. Ordering to be coordinated between shipyard and engine builder.

*15) Based on a design velocity of max. 40 m/s

*16) The exhaust gas pipes upstream and downstream of the EGC must be insulated.

*17) The final amount and position have to be defined by the shipyard considering the system layout and requirements based on installation specific calculation.
*18) By opening of test cock 1 the following conditions can be ckecked:
Normal condition:
No water flow but air suction.
Abnormal condition:
Water flow, which is the indication that the drain valve is blocked in closed position.
*19) By opening of test cock 2 the following conditions can be ckecked:
Normal condition:
Water flow. Water samples can be taken.
Abnormal condition:
No water flow but air suction, which is the indication that the drain valve is blocked in open position.
*20) Valve opening at 25 mbar.

SURFACE PROTECTION SEE GROUP 0344
TOLERANCING PRINCIPLE ISO8015
GENERAL TOLERANCES ACCORDING TO ISO2768-mK

Change	Rev.	Creator	Approver	Approval Date	Change ID	Change Synopsis		Activity Code		
	D	npa101	dst009	20.12.2022	CNAA002993	Drawing Updated	Approved	4	3	
								E	C	

Copyright Winterthur Gas & Diesel Ltd. All rights reserved. By taking possession of the drawing the recipient recognizes and honours these rights. Neither the whole nor any part of this drawing may be used in any way for construction, fabrication, marketing or any other purpose nor copied in any way nor made accessible to third parties without the previous written consent of Winterthur Gas & Diesel Ltd.

[mm] [kg] 1:1 NX A0 Item ID PTAA005017 Drawing Page/s 2/3

SYSTEM PROPOSAL

NOTE
Further installation details and variants can be found listed in the Marine Installation Manual (MIM), which provides also the acronyms used in this drawing set. The piping symbols are explained by the piping symbol key as included in the drawing set "Various Installation Items".

Long Route
- Exhaust gas branch-off after economizer

Table 1: Recommended pipe dimensions in relation to exhaust gas mass flow

Exhaust Gas mass flow (turbine flow from GTD) kg/s	EGC Size	D	E	A*15)	B
11.5 -12.9	EGC14	700	500	800	
12.9 - 14.4	EGC14	700	500	900	
14.4 - 16.4	EGC18	800	600	1000	
16.4 - 18.3	EGC18	800	600	1000	
18.3 - 20.2	EGC23	900	700	1000	
20.2 - 22.8	EGC23	900	700	1100	
22.8 - 24.5	EGC30	1000	800	1100	*9)
24.5 - 29.2	EGC30	1000	800	1200	
29.2 - 30.0	EGC30	1000	800	1300	
30.0 - 34.2	EGC38	1200	900	1300	
34.2 - 38.3	EGC38	1200	900	1400	
38.3 - 39.6	EGC51	1400	1000	1400	
39.6 - 45.5	EGC51	1400	1000	1500	
45.5 - 51.2	EGC51	1400	1000	1600	

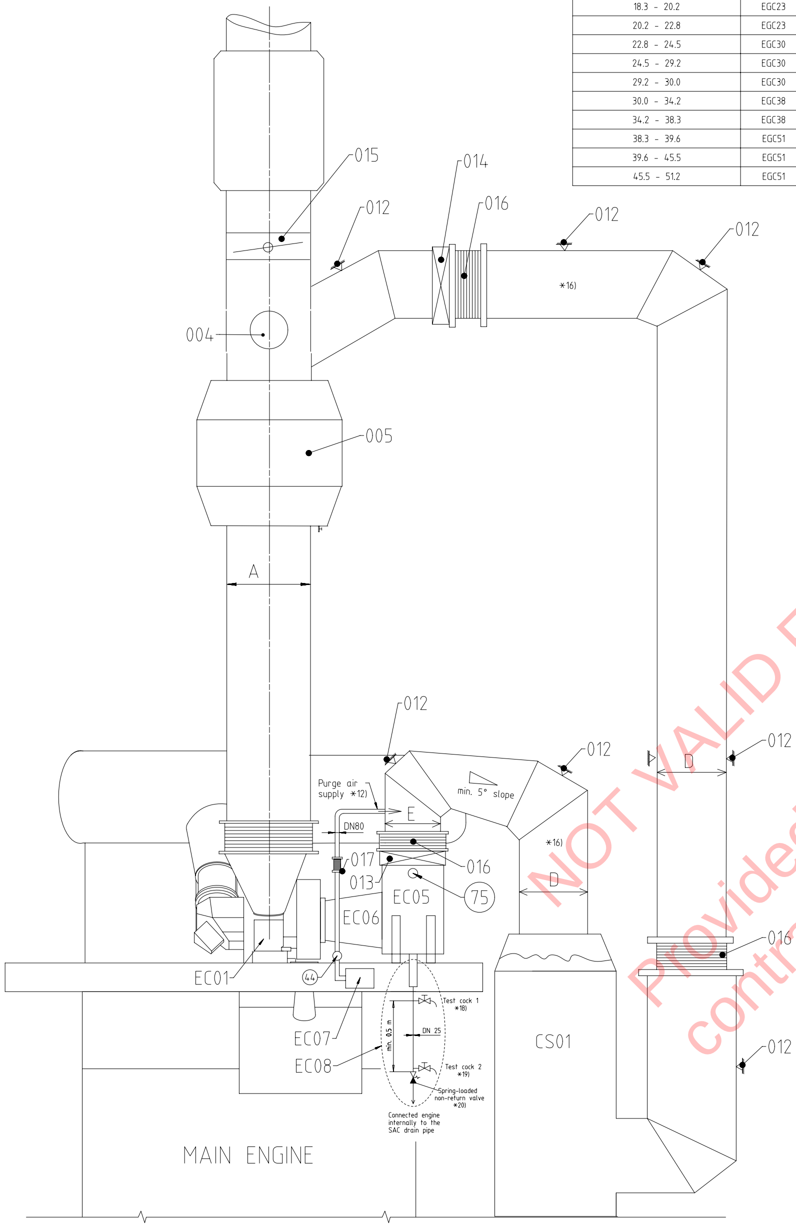

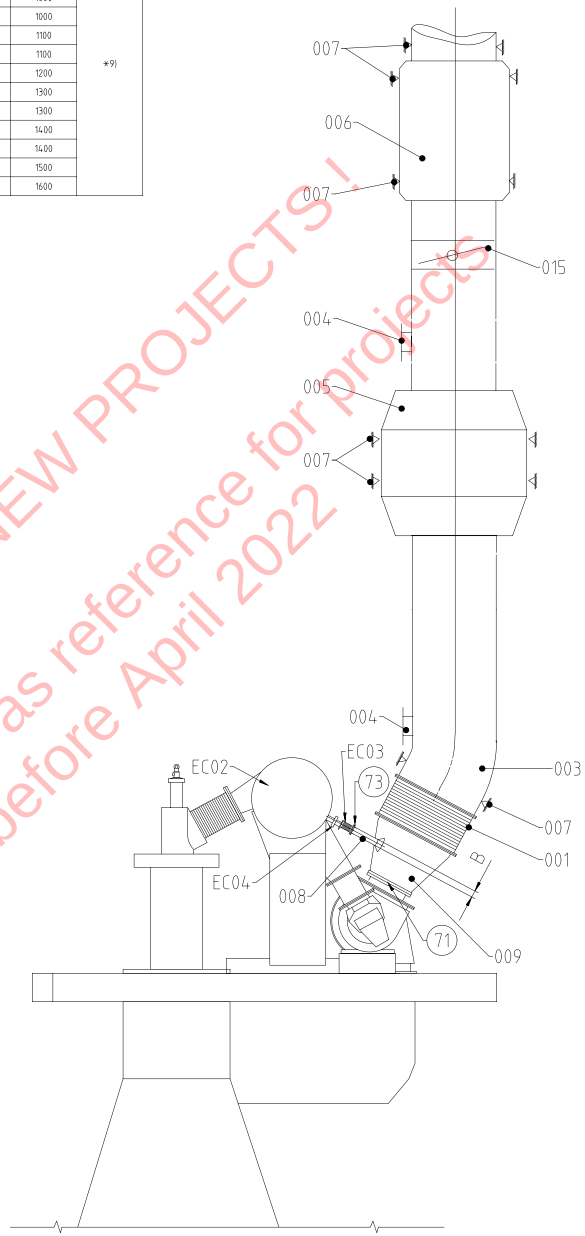

NOT VALID FOR NEW PROJECTS!
Provided only as reference for projects contracted before April 2022

Pos.	SYSTEM COMPONENTS *2)
001	Compensator between engine and exhaust gas system *8)
003	Exhaust gas pipe
004	Explosion relief device (rupture discs or spring-loaded valves) *5)
005	Main Economiser
006	Silencer (with spark arrester) *10)
007	Support *4)
008	Waste gate pipe
009	Transition piece *6)
012	iCER support *4)
013	Flow Regulating Valve (FRV) *13)
014	Shut-off valve (SOV) *13)
015	Back Pressure Valve (BPV) *13)
016	Compensator in the exhaust system *17)
017	Compensator in the purge air supply pipe *12)

Pos.	ENGINE CONNECTIONS *1)
71	OUTLET - Exhaust gas turbocharger
73	OUTLET - Exhaust gas manifold waste gate
75	INLET - Recirculated exhaust gas turbocharger
44	OUTLET - EGC purge air supply

Pos.	ENGINE COMPONENTS *3)
EC01	Turbocharger
EC02	Exhaust gas manifold
EC03	Waste gate compensator *8) *9)
EC04	Waste gate valve
EC05	Water mist catcher (WMC)
EC06	Turbocharger connection piece (cone)
EC07	Engine mounted purging and sealing air blower
EC08	Condensate drain collection pocket with drain pipe, check valves and relief valve

Pos.	COMPONENTS from certified suppliers *14)
CS01	Exhaust Gas Cooler (EGC)

Remarks:

- Drain plugs and drain cocks to be installed where necessary.

*1) Refer to the "Pipe Connection Plan" for the execution and location of the engine pipe connections.

*2) To be installed by the shipyard.

*3) To be delivered by the engine builder, i.e. already equipped on engine side.

*4) The piping of the exhaust gas system must be structurally supported to withstand the mass and to minimise vibrations across the system (e.g. by connecting the support to the ship hull or otherwise).
The type of these supports (fixed or sliding type), their final amount and position have to be defined by the shipyard under consideration of system layout and requirements based on installation specific calculation.

*5) When rupture discs are installed, preventative measures must be taken to ensure that exhaust gas does not continuously flow to the out after rupture. This can be achieved with an exhaust gas duct leading to the open deck, or in the case of a twin-engine installation, by sending a control signal that initiates a shutdown of the engine. If either of these options are not possible, a self-closing, spring-loaded valve with flame arrestor must be used. This would remove the peak pressure of an explosion, while ensuring that the exhaust gas does not continuously flow out.

*6) Area ratio between outlet/inlet = 1.1...1.6, taper angle $\leq$ 40°

*8) The dimension of the expansion piece (compensator) must be defined by the shipyard in accordance with the thermal growth of the exhaust manifold and the exhaust pipe. Vibrations of the pipe after the compensator must be lower than 45 mm/s RMS (root mean square).

*9) Guidance regarding the selection of the waste gate pipe size is provided by the drawing "Specification for waste gate selection".
The waste gate pipe on the shipside is one nominal pipe size larger than the waste gate pipe on the engine side (before the compensator).

*10) Optional, installed as required to meet noise requirements.

*12) The purge air supply line must be connected upstream from the water mist catcher to the EGC exhaust gas return pipe. A compensator must be applied with the shown layout. Other installation variants, as shown in "The iCER Installation Guideline", e.g. with connection via intermediate piece between water mist catcher and exhaust pipe and without compensator, are possible.

*13) Valve size to be selected in accordance with actual exhaust gas mass flow.

*14) To be supplied by a certified supplier. Ordering to be coordinated between shipyard and engine builder.

*15) Based on a design velocity of max. 40 m/s

*16) The exhaust gas pipes upstream and downstream of the EGC must be insulated.

*17) The final amount and position have to be defined by the shipyard considering the system layout and requirements based on installation specific calculation.
*18) By opening of test cock 1 the following conditions can be ckecked:
Normal condition:
No water flow but air suction.
Abnormal condition:
Water flow, which is the indication that the drain valve is blocked in closed position.
*19) By opening of test cock 2 the following conditions can be ckecked:
Normal condition:
Water flow. Water samples can be taken.
Abnormal condition:
No water flow but air suction, which is the indication that the drain valve is blocked in open position.
*20) Valve opening at 25 mbar.

SURFACE PROTECTION SEE GROUP 0344
TOLERANCING PRINCIPLE ISO8015
GENERAL TOLERANCES ACCORDING TO ISO2768-mK

Change	Rev.	Creator	Approver	Approval Date	Change ID	Change Synopsis	Activity Code		
	D	npa101	dst009	20.12.2022	CNAA002993	Drawing Updated		4	3
						Approved		E	C

Copyright Winterthur Gas & Diesel Ltd. All rights reserved. By taking possession of the drawing the recipient recognizes and honours these rights. Neither the whole nor any part of this drawing may be used in any way for construction, fabrication, marketing or any other purpose nor copied in any way nor made accessible to third parties without the previous written consent of Winterthur Gas & Diesel Ltd.

[mm] [kg] 1:1 NX A0 Item ID PTAA005017 Drawing Page/s 3/3

MIDS – Exhaust System (DG9726)

WinGD X52DF-2.1

TRACK CHANGES

DATE	SUBJECT	DESCRIPTION
2020-12-10	DRAWING SET	First web upload
2021-02-08	DAAD132144 DAAD132303	Main and system drawings – new revision
2021-03-19	DAAD132303	System drawing – new revision
2021-07-19	PAAD359330 PTAA005017	Main and system drawings – new revision
2021-12-22	PTAA005017	System drawing – new revision
2022-03-11	PTAA005017	System drawing – new revision
2022-12-02	PTAA005017 PTAA044715	System drawing – new revision New drawing set as replacement for previous one - added
2022-12-20	PTAA005017 PTAA044681	System drawing – new revision New drawing set as replacement for previous one - added
2023-03-27	PTAA044681	System drg. – new revision
2023-12-19	PTAA044681C	New revision

DISCLAIMER

© Copyright by Winterthur Gas & Diesel Ltd.
All rights reserved. No part of this document may be reproduced or copied in any form or by any means (electronic, mechanical, graphic, photocopying, recording, taping or other information retrieval systems) without the prior written permission of the copyright owner.

THIS PUBLICATION IS DESIGNED TO PROVIDE AN ACCURATE AND AUTHORITATIVE INFORMATION WITH REGARD TO THE SUBJECT-MATTER COVERED AS WAS AVAILABLE AT THE TIME OF PRINTING. HOWEVER, THE PUBLICATION DEALS WITH COMPLICATED TECHNICAL MATTERS SUITED ONLY FOR SPECIALISTS IN THE AREA, AND THE DESIGN OF THE SUBJECT-PRODUCTS IS SUBJECT TO REGULAR IMPROVEMENTS, MODIFICATIONS AND CHANGES. CONSEQUENTLY, THE PUBLISHER AND COPYRIGHT OWNER OF THIS PUBLICATION CAN NOT ACCEPT ANY RESPONSIBILITY OR LIABILITY FOR ANY EVENTUAL ERRORS OR OMISSIONS IN THIS BOOKLET OR FOR DISCREPANCIES ARISING FROM THE FEATURES OF ANY ACTUAL ITEM IN THE RESPECTIVE PRODUCT BEING DIFFERENT FROM THOSE SHOWN IN THIS PUBLICATION. THE PUBLISHER AND COPYRIGHT OWNER SHALL UNDER NO CIRCUMSTANCES BE HELD LIABLE FOR ANY FINANCIAL CONSEQUENTIAL DAMAGES OR OTHER LOSS, OR ANY OTHER DAMAGE OR INJURY, SUFFERED BY ANY PARTY MAKING USE OF THIS PUBLICATION OR THE INFORMATION CONTAINED HEREIN.

Winterthur Gas & Diesel Ltd.
Winterthur Gas & Diesel AG.
Winterthur Gas & Diesel S.A.

Schützenstrasse 3
PO Box 414, CH-8401
Winterthur, Switzerland

Tel. +41 (0)52 264 8844
Fax +41 (0)52 264 8866

www.wingd.com