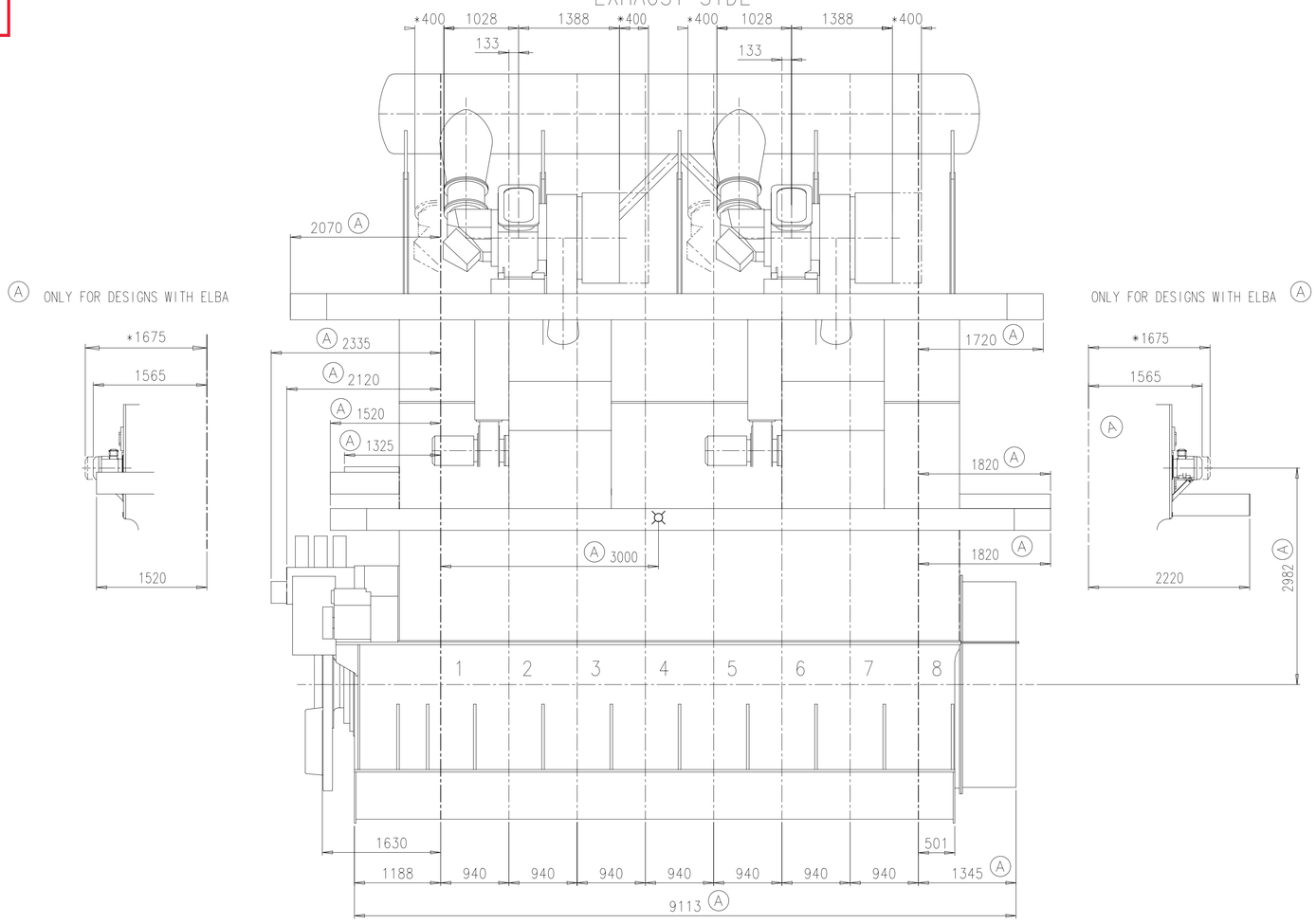
Download "DXF file"

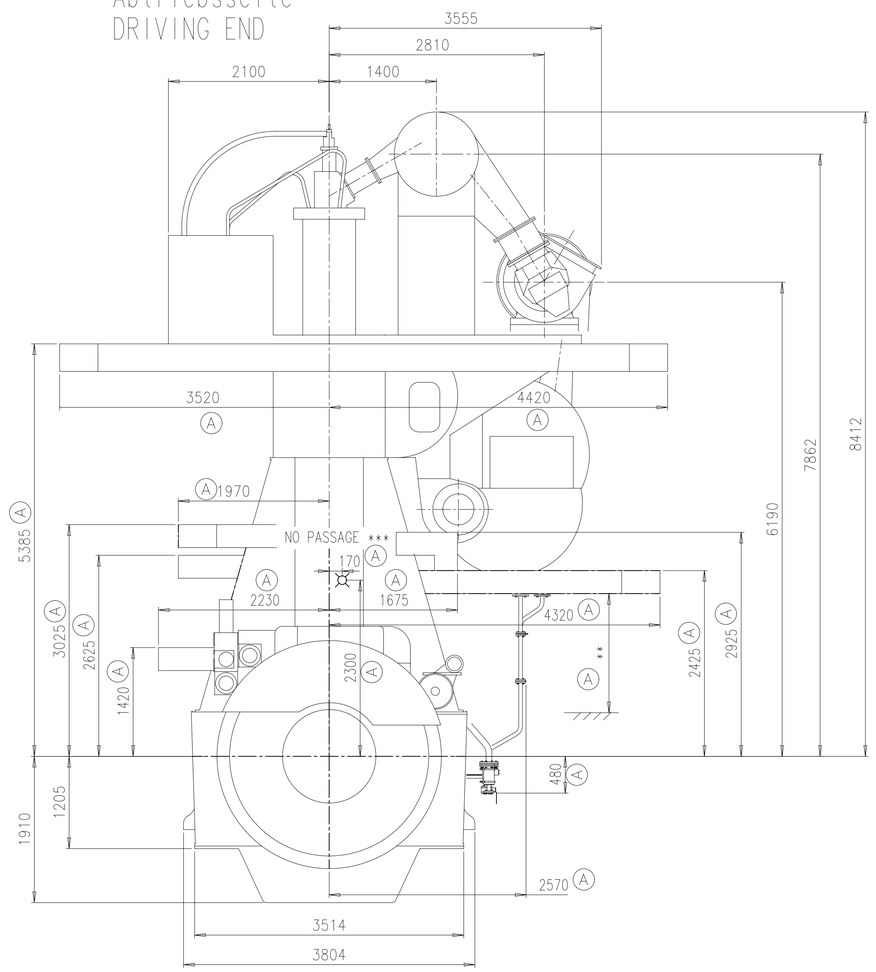
Abgasseite
EXHAUST SIDE

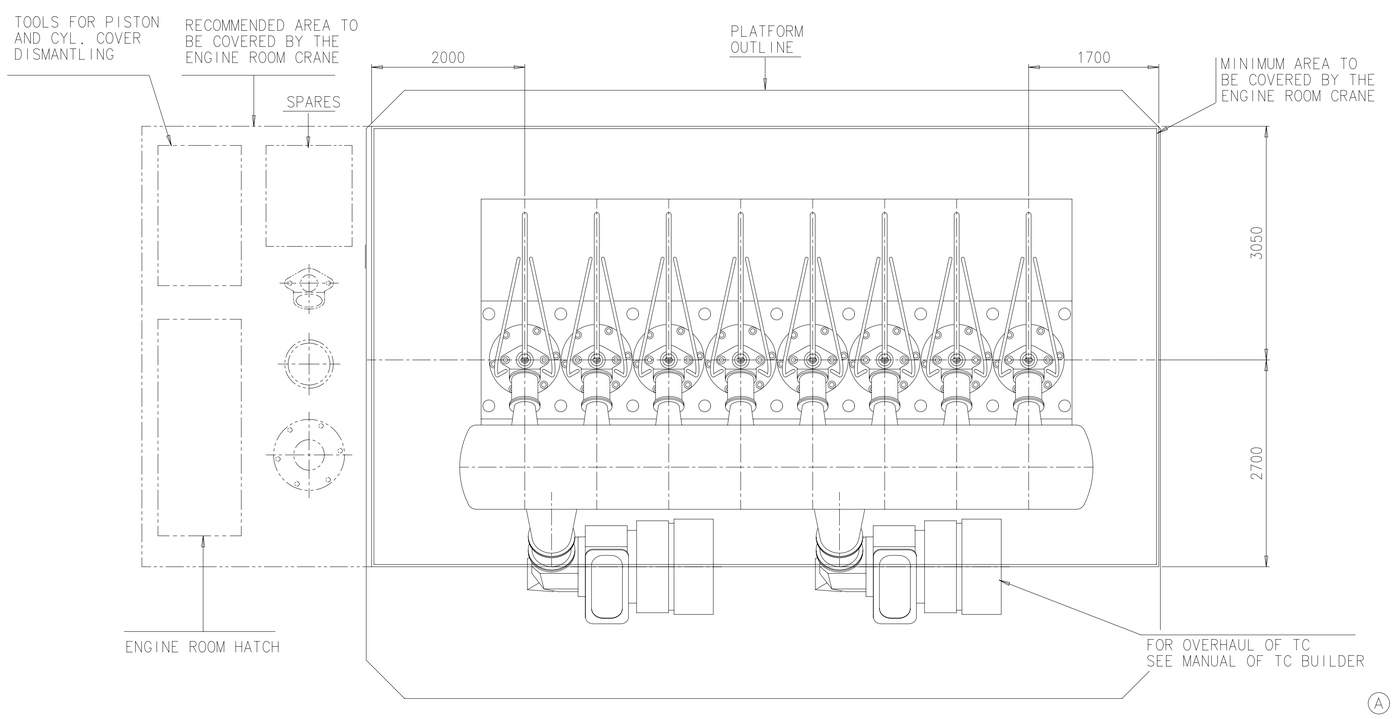


A ONLY FOR DESIGNS WITH ELBA

ONLY FOR DESIGNS WITH ELBA A

Abtriebsseite
DRIVING END





A

DIMENSIONS FOR REFERENCE ONLY!
THIS OUTLINE DRAWING CAN NOT BE USED FOR THE FINAL DESIGN!
PLEASE TAKE THE CORRESPONDING DESIGN GROUP!

APPROXIMATE CENTRE OF GRAVITY A

WEIGHT WITHOUT WATER OR OIL = 323t A

* SPACE FOR REMOVAL A

** ATTENTION: FREE SPACE FOR PASSAGE A IS REDUCED, IF THE BASIS LEVEL ON THE SHIP IS HIGHER THAN THE CENTRE OF CRANKSHAFT.

*** THE LOWER PLATFORM HAS NO PASSAGE ON THE DRIVING END-SIDE, IF A PASSAGE IS REQUIRED, A SHIP-SIDED WAY HAS TO BE ARRANGED. A

TURBOCHARGER A265-L

Net Weight	Quantity PER ENGINE	SEQ NO	Material ID	Material Name / Dimension, Occ	Standard or Drawing	Basic Material / Material Standard	Weight GR./NET
0,001	1	001	PAAD234178	DISMANTLING DIMENSIONS	DAAD080292		0,001

Approved

MaterialID	Free space for Inc	Q-Code	Main Drw.
PAAD172962		XXXXX	H

Standard: ISO; JIS

Modif	Number	Drawn date	Number	Drawn date	Number	Drawn date	Number	Drawn date
A	EAAD087837	08.06.2017						

WIN GD Winterthur Gas & Diesel

Product: W8X52

ENGINE OUTLINE VIEW
Motoransichten

Units	mm kg	NX	Basic Material	Net Weight
Made	07.10.2014	CSC001 C.SCHMUTZ	Scale 1:40	Size A1 / Page 1/1 / Material ID
Chkd	21.11.2014	rsa042 Saez	Design Group 0812	
Appd	24.11.2014	bfr005 Frei	Drawing ID DAAD054821	Rev. A

SURFACE PROTECTION SEE GROUP 0344
TOLERANCING PRINCIPLE ISO8015
GENERAL TOLERANCES ACCORDING TO ISO2768-mK

3D - DIMENSIONAL DRAWING - Confidential

Copyright Winterthur Gas & Diesel Ltd. All rights reserved. By taking possession of the drawing the recipient recognizes and honours these rights. Neither the whole nor any part of this drawing may be used in any way for construction, fabrication, marketing or any other purpose nor copied in any way nor made accessible to third parties without the previous written consent of Winterthur Gas & Diesel Ltd.

Download
"DXF file"

Zuganker
TIE ROD

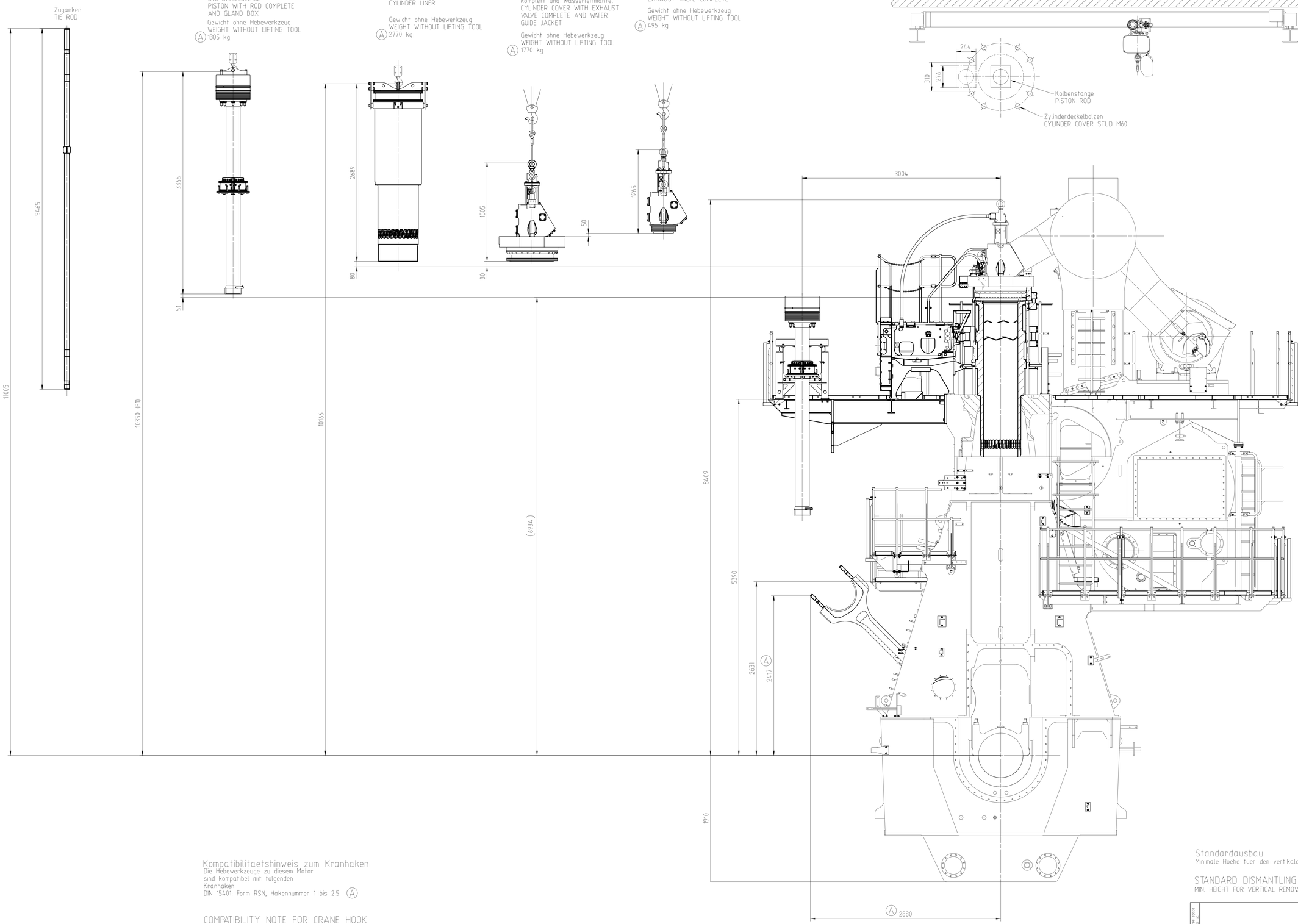
Kolben mit Stange komplett
und Stopfbuechse
PISTON WITH ROD COMPLETE
AND GLAND BOX
Gewicht ohne Hebewerkzeug
WEIGHT WITHOUT LIFTING TOOL
Ⓐ 1305 kg

Zylindereinsatz
CYLINDER LINER
Gewicht ohne Hebewerkzeug
WEIGHT WITHOUT LIFTING TOOL
Ⓐ 2770 kg

Zylinderdeckel mit Auslassventil
komplett und Wasserleitmantel
CYLINDER COVER WITH EXHAUST
VALVE COMPLETE AND WATER
GUIDE JACKET
Gewicht ohne Hebewerkzeug
WEIGHT WITHOUT LIFTING TOOL
Ⓐ 1770 kg

Auslassventil komplett
EXHAUST VALVE COMPLETE
Gewicht ohne Hebewerkzeug
WEIGHT WITHOUT LIFTING TOOL
Ⓐ 495 kg

Ⓐ Krankapazitaet min.
CRANE CAPACITY MIN. 3000 kg



Kompatibilitaetshinweis zum Kranhaken
Die Hebewerkzeuge zu diesem Motor
sind kompatibel mit folgenden
Kranhaken:
DIN 15401: Form RSN, Hakennummer 1 bis 2.5 Ⓐ

COMPATIBILITY NOTE FOR CRANE HOOK
THE LIFTING TOOLS FOR THIS ENGINE
ARE COMPATIBLE WITH FOLLOWING
CRANE HOOK:
DIN 15401: SHAPE RSN, HOOK NUMBER 1 TO 2.5 Ⓐ

Standardausbau
Minimale Hoehe fuer den vertikalen Ausbau: F1

STANDARD DISMANTLING
MIN. HEIGHT FOR VERTICAL REMOVAL: F1

Mod.	Ⓐ	EAAD091495	06.04.2020								
	Number		Drawn date	Number	Drawn date	Number	Drawn date	Number	Drawn date		

Free space for QR code

Q-Code XXXXX
Standard ISO; JIS
Main Drw.

WIN GD Winterthur Gas & Diesel

Product X52

DISMANTLING DIMENSIONS
Ausbaumasse

Units mm kg | NX | Basic Material | Net Weight 0.001

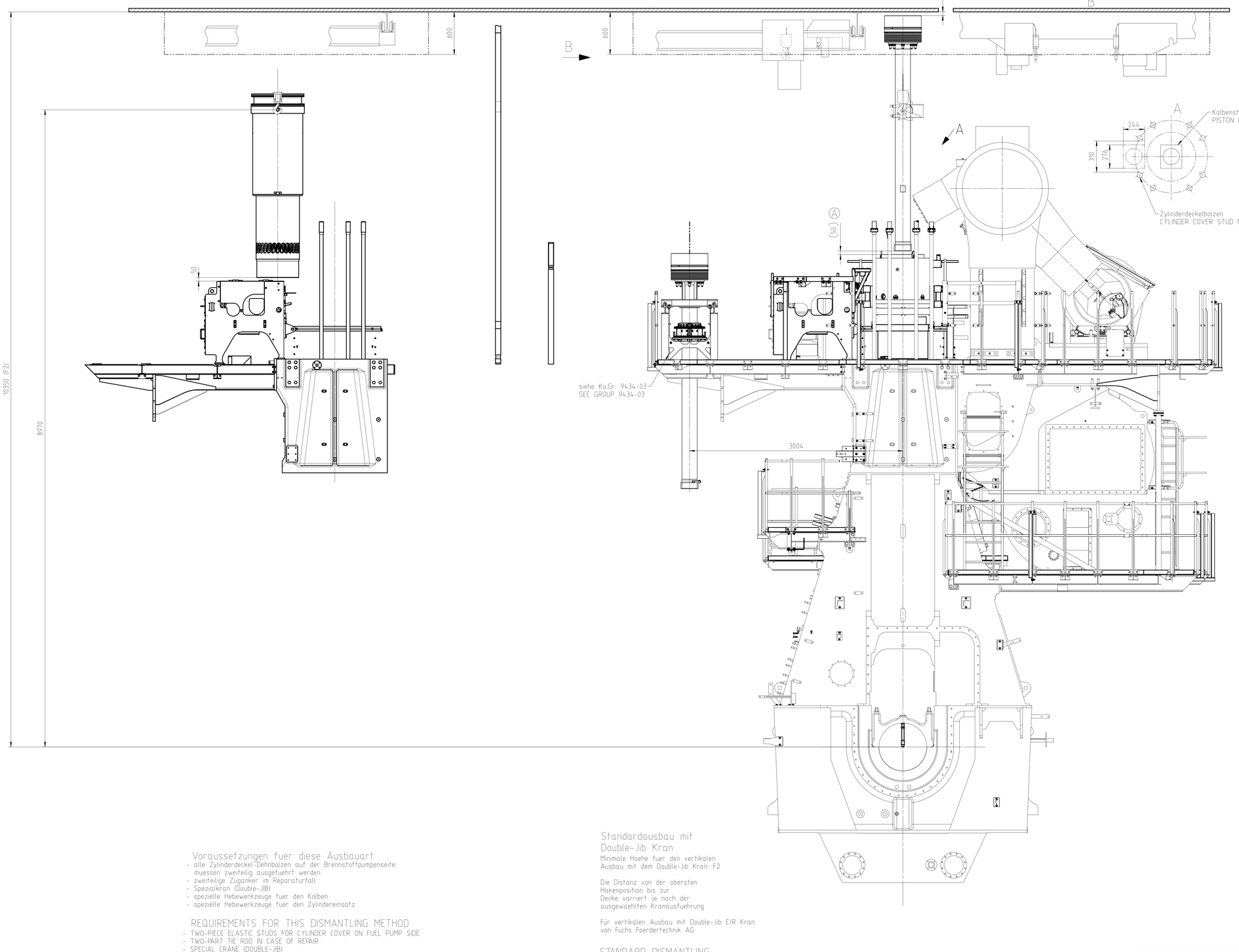
SURFACE PROTECTION SEE GROUP 0344	Made	13.07.2016	Ravindra Patil	Scale 1:20	Size A0	Page 1/3	Material ID PAAD234178
TOLERANCING PRINCIPLE ISO8015	Chkd	11.08.2016	ffa015 Fauler	Design Group 0812			
GENERAL TOLERANCES ACCORDING TO ISO2768-mK	Appd	11.08.2016	bha009 Haag	Drawing ID DAAD080292			Rev. A

Copyright Winterthur Gas & Diesel Ltd. All rights reserved. By taking possession of the drawing the recipient recognizes and honours these rights. Neither the whole nor any part of this drawing may be used in any way for construction, fabrication, marketing or any other purpose nor copied in any way nor made accessible to third parties without the previous written consent of Winterthur Gas & Diesel Ltd.
PERSONAL SCHUNG / confidential
Adobe

DOUBLE-JIB CRANE
Krankapazitaet min. 2x1625 kg
CRANE CAPACITY MIN. 2x1625 kg

Zuganker zweiteilig
TWO-PART TIE ROD

DOUBLE-JIB CRANE
Krankapazitaet min. 2x1625 kg
CRANE CAPACITY MIN. 2x1625 kg



Voraussetzungen fuer diese Ausbauart

- alle Zylinderdeckel-Dehnbolzen auf der Brennstoffpumpenseite muessen zweiteilig ausgefuehrt werden
- zweiteilige Zuganker im Reparaturfall
- Spezialkran (Double-Jib)
- spezielle Hebewerkzeuge fuer den Kolben
- spezielle Hebewerkzeuge fuer den Zylindereinsatz

REQUIREMENTS FOR THIS DISMANTLING METHOD

- TWO-PIECE ELASTIC STUDS FOR CYLINDER COVER ON FUEL PUMP SIDE
- TWO-PART TIE ROD IN CASE OF REPAIR
- SPECIAL CRANE (DOUBLE-JIB)
- SPECIAL LIFTING TOOLS FOR PISTON
- SPECIAL LIFTING TOOLS FOR CYLINDER LINER

Standardausbau mit Double-Jib Kran

Minimale Haehe fuer den vertikalen Ausbau mit dem Double-Jib Kran: F2

Die Distanz von der obersten Hakenposition bis zur Decke varriert je nach der ausgewaehlten Kranausfuehrung

Für vertikalen Ausbau mit Double-Jib E/R Kran von Fuchs Foerdertechnik AG

STANDARD DISMANTLING WITH DOUBLE-JIB CRANE

MIN. HEIGHT FOR VERTICAL REMOVAL WITH DOUBLE-JIB CRANE: F2

DISTANCE BETWEEN TOP POSITION OF HOOK AND ENGINE ROOM CEILING VARIES DEPENDING ON CRANE TYPE.

FOR VERTICAL REMOVAL WITH DOUBLE JIB E/R CRANE BY FUCHS FOERDERTECHNIK AG

Free space for ...							Q-Code XXXXX Standard ISO; JIS		Main Dr.:
Modif.	A	EAAD091495	06.04.2020						
	Number	Drawn date	Number	Drawn date	Number	Drawn date	Number	Drawn date	

WIN GD Winterthur Gas & Diesel

Product X52

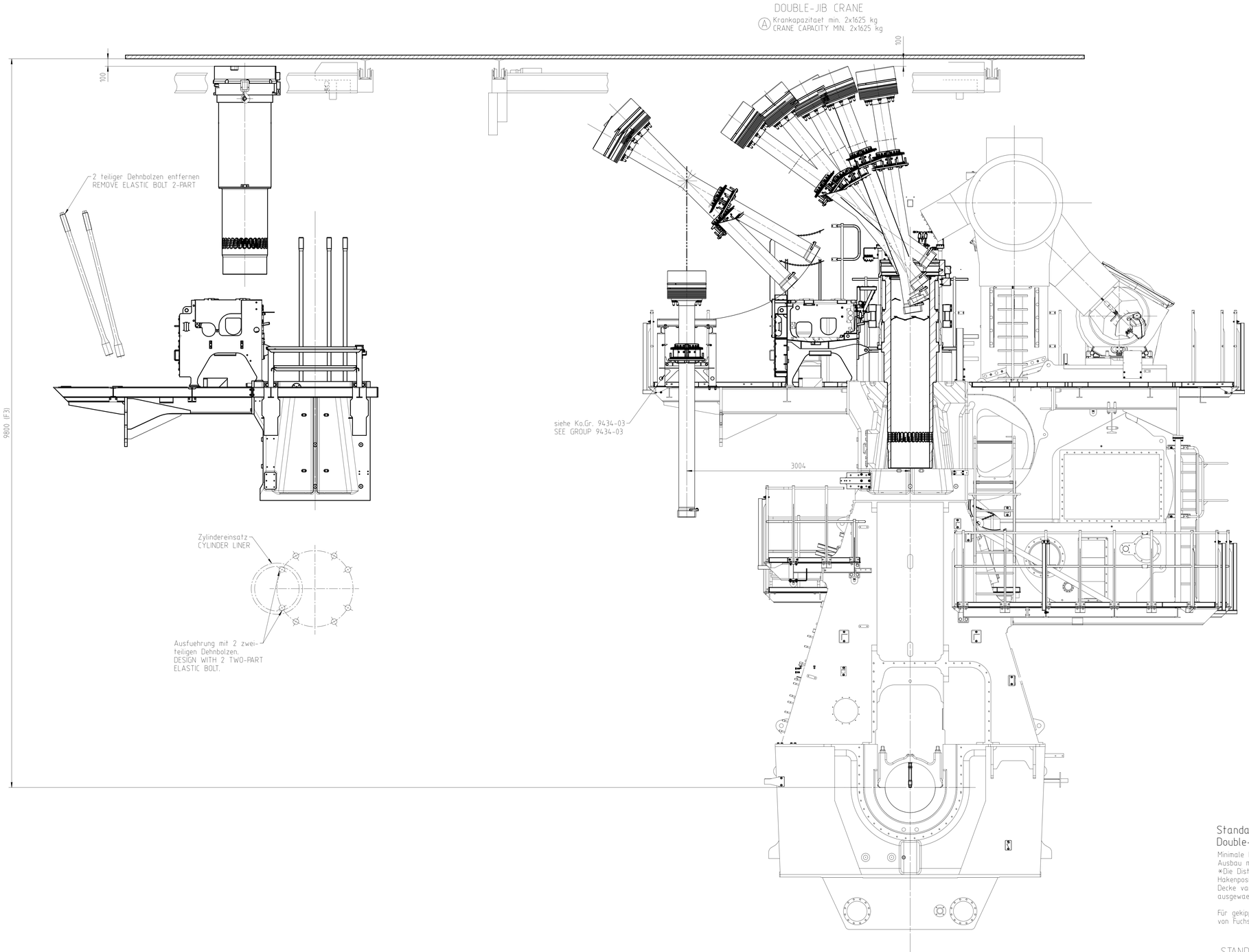
DISMANTLING DIMENSIONS

Ausbaumasse

Units	mm kg	NX	Basic Material		Net Weight 0,001
SURFACE PROTECTION SEE GROUP 0344	Made	13.07.2016 Ravindra Patil	Scale 1:20	Size A0	Page 2/3	Material ID PAAD234178
TOLERANCING PRINCIPLE ISO8015	Chkd	11.08.2016 ifa015 Fauler	Design Group 0812	Drawing ID DAAD080292	Rev. A
GENERAL TOLERANCES ACCORDING TO ISO2768-mK	Appd	11.08.2016 bha009 Haag			

Approved

Copyright Winterthur Gas & Diesel Ltd. All rights reserved. By having possession of the drawing the recipient recognizes and honours these rights. Neither the whole nor any part of this drawing may be used in any way for construction, fabrication, marketing or any other purpose nor copied in any way nor made accessible to third parties without the previous written consent of Winterthur Gas & Diesel Ltd.



Voraussetzungen fuer diese Ausbauart

- zweiteilige Zylinderdeckel-Dehnbolzen auf der Brennstoffpumpenseite
- zweiteilige Zuganker im Reparaturfall
- Spezialkran (DOUBLE-JIB)
- spezielle Hebewerkzeuge fuer den Zylindereinsatz und den Kolben
- damit der Zylindereinsatz ausgebaut werden kann, muessen die benachbarten Zylinderdeckel demontiert werden.

REQUIREMENTS FOR THIS DISMANTLING METHOD

- TWO-PIECE ELASTIC STUDS FOR CYLINDER COVER ON FUEL PUMP SIDE
- TWO-PART TIE ROD IN CASE OF REPAIR
- SPECIAL CRANE (DOUBLE-JIB)
- SPECIAL LIFTING TOOLS FOR CYLINDER LINER AND PISTON
- FOR CYLINDER LINER DISMANTLING THE NEIGHBOURING CYLINDER COVERS NEED TO BE REMOVED, TOO

Standardausbau mit Double-Jib Kran

Minimale Hoehe fuer den gekippten
Ausbau mit dem Double-Jib Kran: F3
*Die Distanz von der obersten
Hakenposition bis zur
Decke varriert je nach der
ausgewaehlten Kranausfuehrung

Für gekippten Ausbau mit Double-Jib E/R Kran
von Fuchs Foerdertechnik AG

STANDARD DISMANTLING WITH DOUBLE-JIB CRANE

MIN. HEIGHT FOR VERTICAL REMOVAL WITH DOUBLE-JIB CRANE: F3
DISTANCE BETWEEN TOP POSITION OF
HOOK AND ENGINE ROOM CEILING VARIES
DEPENDING ON CRANE TYPE.

FOR TILTED REMOVAL WITH DOUBLE JIB E/R CRANE
BY FUCHS FOERDERTECHNIK AG

Free datum for ident.									Q-Code XXXXX Standard ISO; JIS		Main Drw.
Mod.	A	EAAD091495	06.04.2020								
	Number		Drawn date	Number	Drawn date	Number	Drawn date	Number	Drawn date	Number	Drawn date

WIN GD Winterthur Gas & Diesel

Product X52

DISMANTLING DIMENSIONS

Ausbaumasse

Units	mm kg	NX	Basic Material	Net Weight 0,001

SURFACE PROTECTION SEE GROUP 0344	Made	13.07.2016	Ravindra Patil	Scale 1:25	Size A0	Page 3/3	Material ID PAAD234178
TOLERANCING PRINCIPLE ISO8015	Chkd	11.08.2016	ffa015 Fauler	Design Group 0812			
GENERAL TOLERANCES ACCORDING TO ISO2768-mK	Appd	11.08.2016	bha009 Haag	Drawing ID DAAD080292			Rev. A

Copyright Winterthur Gas & Diesel Ltd. All rights reserved. By taking possession of the drawing the recipient recognizes and honours these rights. Neither the whole nor any part of this drawing may be used in any way for construction, fabrication, marketing or any other purpose nor copied in any way nor made accessible to third parties without the previous written consent of Winterthur Gas & Diesel Ltd.

WinGD-8X52_Engine-Outline-View

TRACK CHANGES

DATE	SUBJECT	DESCRIPTION
2018-01-30	DRAWING SET	First web upload
2020-07-21	DAAD080292	Revised Dismantling Dimensions Drawing has been updated.

DISCLAIMER

© Copyright by Winterthur Gas & Diesel Ltd.
All rights reserved. No part of this document may be reproduced or copied in any form or by any means (electronic, mechanical, graphic, photocopying, recording, taping or other information retrieval systems) without the prior written permission of the copyright owner.

THIS PUBLICATION IS DESIGNED TO PROVIDE AN ACCURATE AND AUTHORITATIVE INFORMATION WITH REGARD TO THE SUBJECT-MATTER COVERED AS WAS AVAILABLE AT THE TIME OF PRINTING. HOWEVER, THE PUBLICATION DEALS WITH COMPLICATED TECHNICAL MATTERS SUITED ONLY FOR SPECIALISTS IN THE AREA, AND THE DESIGN OF THE SUBJECT-PRODUCTS IS SUBJECT TO REGULAR IMPROVEMENTS, MODIFICATIONS AND CHANGES. CONSEQUENTLY, THE PUBLISHER AND COPYRIGHT OWNER OF THIS PUBLICATION CAN NOT ACCEPT ANY RESPONSIBILITY OR LIABILITY FOR ANY EVENTUAL ERRORS OR OMISSIONS IN THIS BOOKLET OR FOR DISCREPANCIES ARISING FROM THE FEATURES OF ANY ACTUAL ITEM IN THE RESPECTIVE PRODUCT BEING DIFFERENT FROM THOSE SHOWN IN THIS PUBLICATION. THE PUBLISHER AND COPYRIGHT OWNER SHALL UNDER NO CIRCUMSTANCES BE HELD LIABLE FOR ANY FINANCIAL CONSEQUENTIAL DAMAGES OR OTHER LOSS, OR ANY OTHER DAMAGE OR INJURY, SUFFERED BY ANY PARTY MAKING USE OF THIS PUBLICATION OR THE INFORMATION CONTAINED HEREIN.