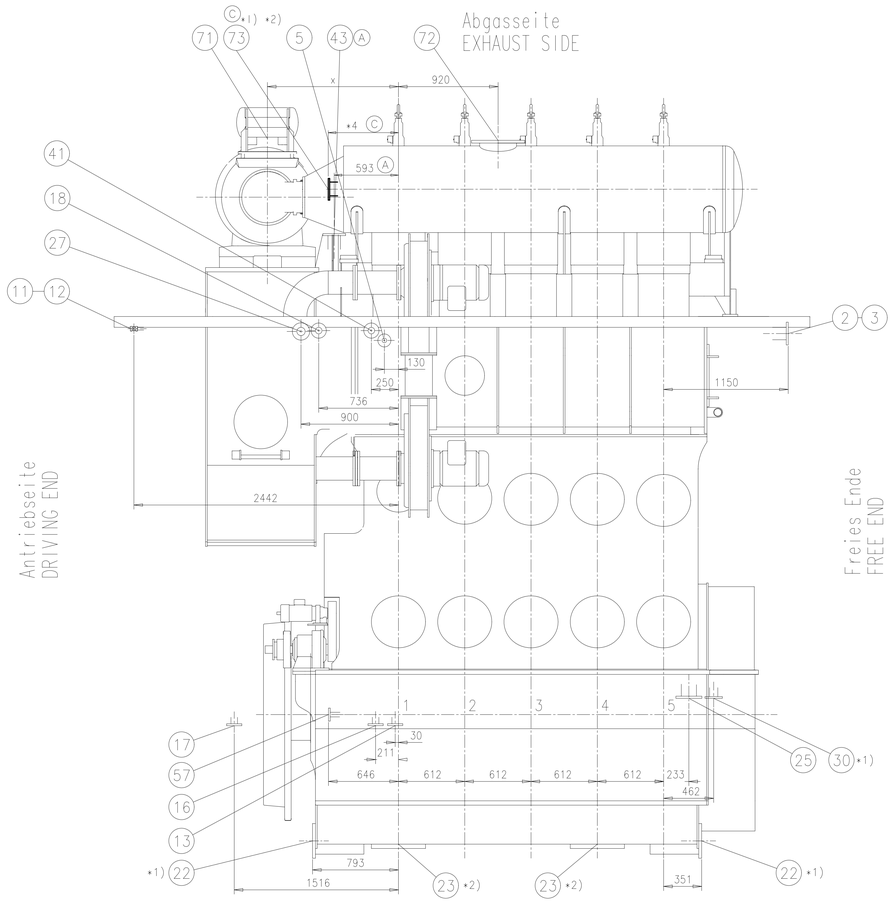
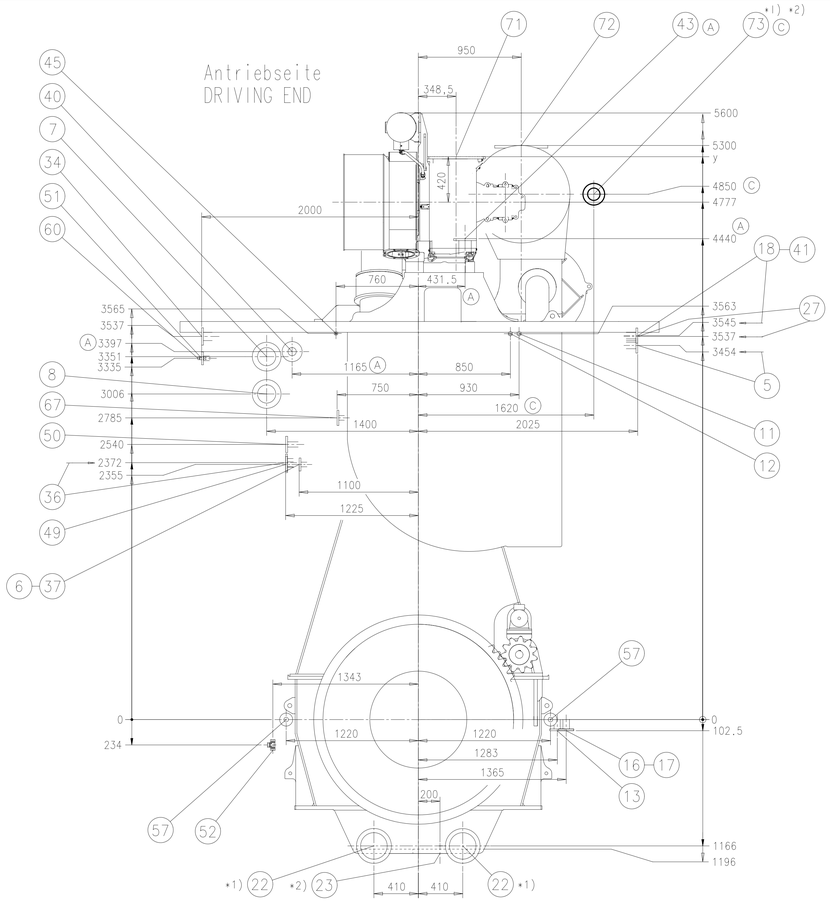
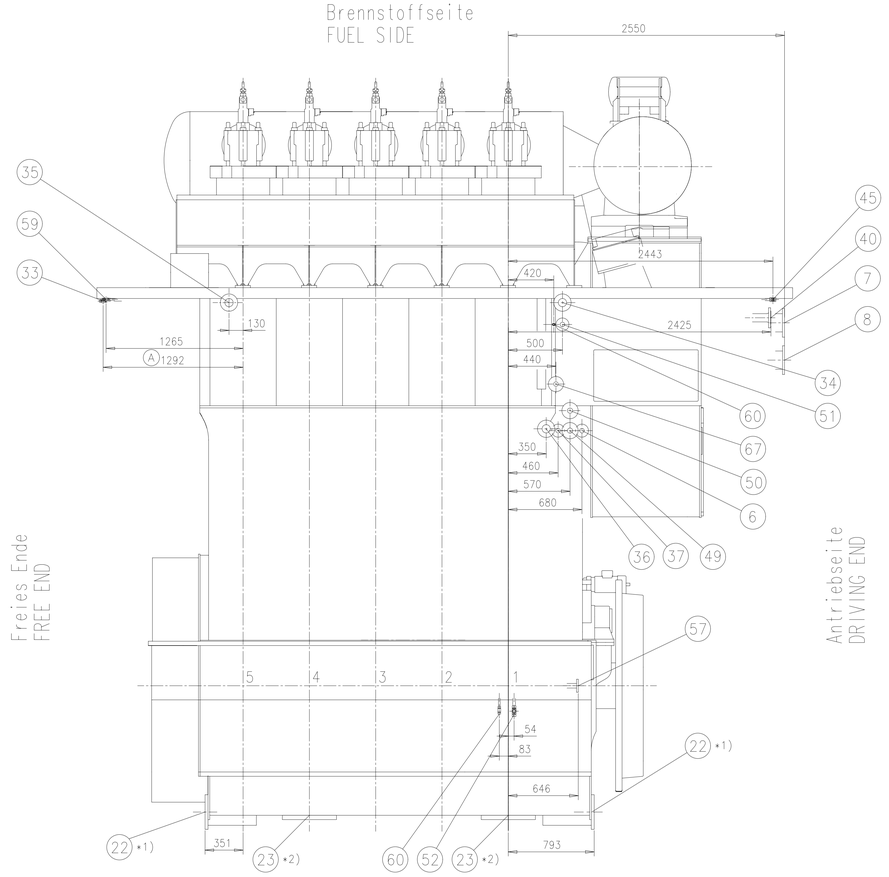
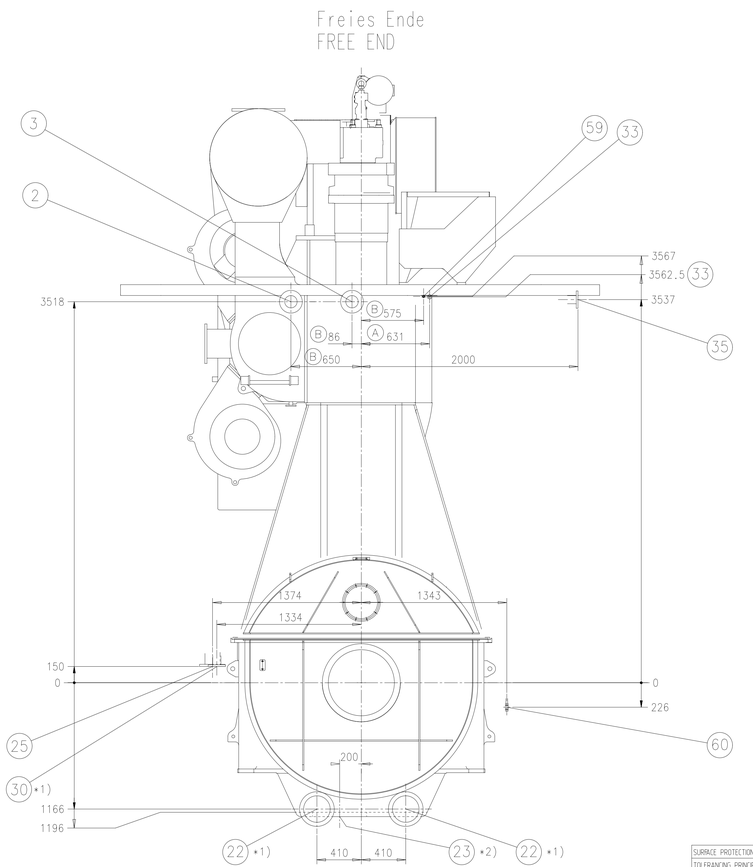
Download "DXF file"









Gasaustritt-Stellung GAS OUTLET POSITION ⊿	x	y
0°	1274	5197
45°	1571	5074

*1) Optionelle Ausfuehrung (wenn verlangt)
OPTIONAL EXECUTION (IF REQUIRED)

*2) Standard Ausfuehrung
STANDARD EXECUTION
Vorschlag,Endgueltige Position
ist mit Werft zu bestimmen
PROPOSAL,FINAL POSITION TO BE DETERMINATED
IN ACCORDANCE WITH SHIPYARD

*4) SEE *DAAD116127

Alle Flanschanschluesse am Motor sind mit Gegenflanschen versehen (Blindflansch), ausgenommen der Anschluss fuer den Gasaustritt am Turbolader. Die Blindflansche sind nach dem betreffenden Rohrdurchmesser des Werftanschlusses aufzubohren.
THE PIPE CONNECTIONS ON THE ENGINE ARE SUPPLIED WITH MATING FLANGES (BLIND), WITH EXCEPTION OF THE TURBOCHARGER EXHAUST GAS OUTLET. BLIND FLANGES TO BE DRILLED TO MATCH PIPE DIA SUPPLIED BY THE SHIPYARD.

Die Gewinde-Anschluesse werden komplett geliefert
SCREWED CONNECTIONS ARE SUPPLIED COMPLETE

1 x ABB A160

Internes TL Oelsystem
INTERNAL TC OIL SYSTEM

Nettogewicht	0,001										
Quantity PER ENGINE	1	001	107.390.729.500	FLANGE DIMENSIONS		107.390.729					0,001
	SEQ NO	Material ID	Material Name Dimension, Occ			Standard or Drawing				Basic Material Material Standard	Weight GR.NET
Model DAAD219720	Prior Model No.									Q-Code XXXXX Standard ISO	Main Drw. H
Material	Mod	A EAAD086630	02.06.2016	B EAAD087716	04.09.2017	C EAAD094207	06.11.2020				
		Number	Drawn date	Number	Drawn date	Number	Drawn date	Number	Drawn date		

WIN GD Winterthur Gas & Diesel

Product WSX35-B

PIPE CONNECTION PLAN

Rohranschlussplan

Units	mm kg	NX	Basic Material	Net Weight
Mode	13.02.2016 cku010 kubler		Scale 1:20	Size A0 Page 1/2 Material ID
Chkd	12.04.2016 ihe003 Hercog		Design Group 8020	Drawing ID DAAD075782 Rev. C
Appd	12.04.2016 bha009 Haag			

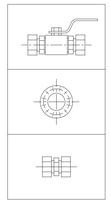
SURFACE PROTECTION SEE GROUP 0344
TOLERANCING PRINCIPLE ISO8015
GENERAL TOLERANCES ACCORDING TO ISO2768-mK

Copyright Winterthur Gas & Diesel Ltd. All rights reserved. By having possession of the drawing the recipient recognises and honours these rights. Neither the whole nor any part of this drawing may be used in any way for construction, fabrication, marketing or any other purpose nor copied in any way nor made accessible to third parties without the previous written consent of Winterthur Gas & Diesel Ltd.

				Ko.Gr. KO.GR.	Leitungs-Anschluesse PIPE-CONNECTIONS: Freies Ende FREE END	Antriebseite DRIVING END	Abgasseite EXHAUST SIDE	Brennstoffseite FUEL SIDE
1		Zylinderkuehlwasser Eintritt CYLINDER COOLING WATER INLET	DN PN	8301	*Nicht benoetigt NOT USED*			
2		Zylinderkuehlwasser Eintritt CYLINDER COOLING WATER INLET	DN 100 PN 6	8305	X		X	
3		Zylinderkuehlwasser Austritt CYLINDER COOLING WATER OUTLET	DN 100 PN 6	8310	X		X	
4		Zylinderkuehlwasser Entlueftung Entlueftung CYLINDER COOLING WATER VENTING VENTING	DN PN	8310	*Nicht benoetigt NOT USED*			
5		Zylinderkuehlwasser Entleerung Austritt CYLINDER COOLING WATER DRAIN OUTLET	DN 32 PN 6	8313		X	X	
6		SLK Entleerung Austritt SAC DRAIN OUTLET	DN 32 PN 6	8314		X		X
7		SLK-NT-Kuehlwasser Eintritt SAC-LT-COOLING WATER INLET	DN 150 PN 6	8335		X		X
8		SLK-NT-Kuehlwasser Austritt SAC-LT-COOLING WATER OUTLET	DN 150 PN 6	8335		X		X
9		SLK-HT-Kuehlwasser Eintritt SAC-HT-COOLING WATER INLET	DN PN	8335	*Nicht benoetigt NOT USED*			
10		SLK-HT-Kuehlwasser Austritt SAC-HT-COOLING WATER OUTLET	DN PN	8335	*Nicht benoetigt NOT USED*			
11		Wasser fuer Reinigungsanlage TL und SLK Eintritt WATER FOR CLEANING PLANT TC AND SAC INLET	DN 20 PN 16	8338		X	X	
12		Luft fuer Reinigungsanlage TL und SLK Eintritt AIR FOR CLEANING PLANT TC AND SAC INLET	DN 20 PN 16	8338		X	X	
13		Oeliges Wasser vom Receiver Austritt OILY WATER FROM RECEIVER OUTLET	DN 50 PN 6	8352		X	X	
14		Turbolader Schmutzwasser Austritt TURBOCHARGER DIRTY WATER OUTLET	DN PN	8355	*Nicht benoetigt NOT USED*			
15		Ablauf vom Wasserabscheider Austritt WATER DRAIN FROM WATERSEPERATOR OUTLET	DN PN	8356	*Nicht benoetigt NOT USED*			
16		SLK Kondenswasser Austritt SAC CONDENSATE WATER OUTLET	DN 50 PN 6	8357		X	X	
17		SLK Waschwasser Austritt SAC WASHING WATER OUTLET	DN 50 PN 6	8357		X	X	
18		SLK Entlueftung Entlueftung SAC VENTING VENTING	DN 50 PN 6	8357		X	X	
19								
20								
21								
22	siehe Detail SEE DETAIL	Oelablauf Grundplatte Horizontal OIL DRAIN BEDPLATE HORIZONTAL		1110	X	X		
23	siehe Detail SEE DETAIL	Oelablauf Grundplatte Vertikal OIL DRAIN BEDPLATE VERTICAL		1110	X	X		
24		Zylinder Schmieroel Austritt CYLINDER LUB. OIL OUTLET	DN 40 PN 6	8472	*Nicht benoetigt NOT USED*			
25		Hauptschmieroel Eintritt MAIN LUBRICATING OIL INLET	DN 125 PN 6	8406	X		X	

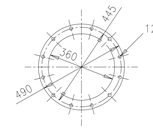
				Ko.Gr. KO.GR.	Leitungs-Anschluesse PIPE-CONNECTIONS: Freies Ende FREE END	Antriebseite DRIVING END	Abgasseite EXHAUST SIDE	Brennstoffseite FUEL SIDE
26		Schmieroel Turbolader Eintritt LUBRICATING OIL TURBOCHARGER INLET	DN PN	8430	*Nicht benoetigt NOT USED*			
27		Schmieroel Turbolader Austritt LUBRICATING OIL TURBOCHARGER OUTLET	DN 50 PN 6	8431		X	X	
28		Spueloel Automatikfilter Austritt FLUSHING OIL AUTOMATIC FILTER OUTLET	DN PN	8445	*Nicht benoetigt NOT USED*			
29		Schmutzoel Ablauf Versorgungseinheit Austritt DIRTY OIL DRAIN SUPPLY UNIT OUTLET	DN PN	8452	*Nicht benoetigt NOT USED*			
*1) 30		Schmieroel Kreuzkopf Eintritt LUBRICATING OIL CROSSHEAD INLET	DN50 PN16	8455	X		X	
31		Leckagen vom Motor Austritt DIRTY OIL LEAKAGE FROM ENGINE OUTLET	DN PN	8463	*Nicht benoetigt NOT USED*			
32		Zylinder Schmieroel Eintritt CYLINDER LUB. OIL INLET	DN PN	8473	*Nicht benoetigt NOT USED*			
33		Zylinder Schmieroel Eintritt CYLINDER LUB. OIL INLET	DN 20 PN 3	8475	X			X
34		Leckoel Antriebseite Austritt LEAKAGE OIL DRIVING END OUTLET	DN 65 PN 6	8482		X		X
35		Leckoel Freies Ende Austritt LEAKAGE OIL FREE END OUTLET	DN 65 PN 6	8483	X			X
36		Schmutzoel Kolbenunterseite Austritt DIRTY OIL PISTON UNDERSIDE OUTLET	DN 65 PN 6	8487		X		X
37		Leckoel Stopfbuechse Austritt LEAKAGE OIL GLAND BOX OUTLET	DN 32 PN 6	8488		X		X
38		Oelablaufltg. Versorgungseinheit Austritt OIL PIPE DRAIN SUPPLY UNIT OUTLET	DN PN	8454	*Nicht benoetigt NOT USED*			
39		Leckageablauf Zylinderblock Austritt LEAKAGE DRAIN CYLINDER BLOCK OUTLET	DN PN	8462	*Nicht benoetigt NOT USED*			
40		Anlassluft Eintritt STARTING AIR PIPE INLET	DN 65 PN 40	8605		X		X
41		Entlueftung Kurbelgehaeuse Austritt VENTING CRANKCASE OUTLET	DN 50 PN 6	8608		X	X	
42		Entlueftung Waste Gate Austritt VENTING WASTE GATE OUTLET	DN PN	8609	*Nicht benoetigt NOT USED*			
Ⓐ 43		Entlueftung Turbolader Austritt VENTING TURBOCHARGER OUTLET	DN 100 PN 6	8610		X	X	
44		Entlueftung Zylinderkuehlwasser Austritt VENTING CYLINDER COOLING WATER OUTLET	DN PN	8611	*Nicht benoetigt NOT USED*			
45		Steuerluftversorgung Eintritt CONTROL AIR SUPPLY INLET	DN 15 PN 12	8630		X		X
46		Steuerluftversorgung Eintritt CONTROL AIR SUPPLY INLET	DN PN	4605	*Nicht benoetigt NOT USED*			
47								
48								
49		Brennstoff Eintritt FUEL INLET	DN 40 PN 40	8702		X		X
50		Brennstoffruecklauf Austritt FUEL RETURN OUTLET	DN 40 PN 40	8704		X		X

				Ko.Gr. KO.GR.	Leitungs-Anschluesse PIPE-CONNECTIONS: Freies Ende FREE END	Antriebseite DRIVING END	Abgasseite EXHAUST SIDE	Brennstoffseite FUEL SIDE
51		Leckbrennstoff Rail Unit Austritt FUEL LEAKAGE RAIL UNIT OUTLET	DN 32 PN 6	8740		X		X
52		Leckbrennstoff Austritt FUEL LEAKAGE OUTLET	DN 20 PN 6	8744		X		X
53		Leckbrennstoff HD-Leitungen Austritt FUEL LEAKAGE HP-PIPES OUTLET	DN PN	8742	*Nicht benoetigt NOT USED*			
54		Leckbrennstoff Einspritzpumpe Austritt FUEL LEAKAGE INJECTION PUMP OUTLET	DN PN	8743	*Nicht benoetigt NOT USED*			
55								
56		Leckbrennstoff Einspritzeinheit Austritt FUEL LEAKAGE ICU OUTLET	DN PN	8745	*Nicht benoetigt NOT USED*			
57		Diverse Leckagen Austritt VARIOUS LEAKAGE OUTLET	DN 25 PN 6	8746		X	X	X
58								
59		Begleitheizung Brennstoff Eintritt TRACE HEATING FUEL INLET	DN 12 PN 16	8810	X			X
60		Begleitheizung Brennstoff Austritt TRACE HEATING FUEL OUTLET	DN 12 PN 16	8810		X		X
61		Begleitheizung Brennstoff Eintritt TRACE HEATING FUEL INLET	DN PN	8812	*Nicht benoetigt NOT USED*			
62		Begleitheizung Brennstoff Austritt TRACE HEATING FUEL OUTLET	DN PN	8812	*Nicht benoetigt NOT USED*			
63		Begleitheizung Brennstoffzirkulation Eintritt TRACE HEATING FUEL CIRCULATION INLET	DN PN	8820	*Nicht benoetigt NOT USED*			
64		Begleitheizung Brennstoffzirkulation Austritt TRACE HEATING FUEL CIRCULATION OUTLET	DN PN	8823	*Nicht benoetigt NOT USED*			
65								
66								
67		Feuerloesch Anlage Zylinderblock Eintritt FIRE EXTINGUISHING PLANT CYLINDER BLOCK INLET	DN 32 PN 16	8830		X		X
68		Feuerloesch Anlage Rail Unit Eintritt FIRE EXTINGUISHING PLANT RAIL UNIT INLET	DN PN	8831	*Nicht benoetigt NOT USED*			
69		Feuerloesch Anlage Rail Unit Eintritt FIRE EXTINGUISHING PLANT RAIL UNIT INLET	DN PN	8832	*Nicht benoetigt NOT USED*			
70								
71	siehe Detail SEE DETAIL	Abgas Turbolader Austritt EXHAUST GAS TURBOCHARGER OUTLET		6506 6509		X	X	
72	siehe Detail SEE DETAIL	Abgas Bypass Austritt EXHAUST GAS BY-PASS OUTLET		8103 8108		X	X	
Ⓒ 73		Abgas Abblaseventil Austritt EXHAUST WASTE GATE OUTLET	IF USED,SEE DAAD116127	8135	IF USED,SEE DAAD116127			
74								
75								

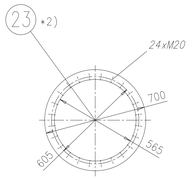


Abmasse der Flansche siehe 4-107.390.729

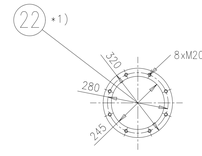
72 Bypass zur Auspuffleitung
EXHAUST BY-PASS



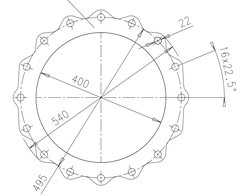
fuer vertikalen Oelablauf
FOR VERTICAL LUB. OIL DRAIN



fuer horizontalen Oelablauf
Freies Ende und Antriebseite
FOR HORIZONTAL LUB. OIL DRAIN
FREE END AND DRIVING END



71 Gas-Austritt vom Turbolader
GAS OUTLET FROM TURBOCHARGER



1 x ABB A160L

Approved

Rev.												Q-Code XXXXX	Main Drw. H
												Standard ISO	
Mod.	A	EAAD086630	02.06.2016	B	EAAD087716	04.09.2017	C	EAAD094207	06.11.2020				
		Number	Drawn date		Number	Drawn date		Number	Drawn date				

WIN GD Winterthur Gas & Diesel

Product W5X35-B

PIPE CONNECTION PLAN

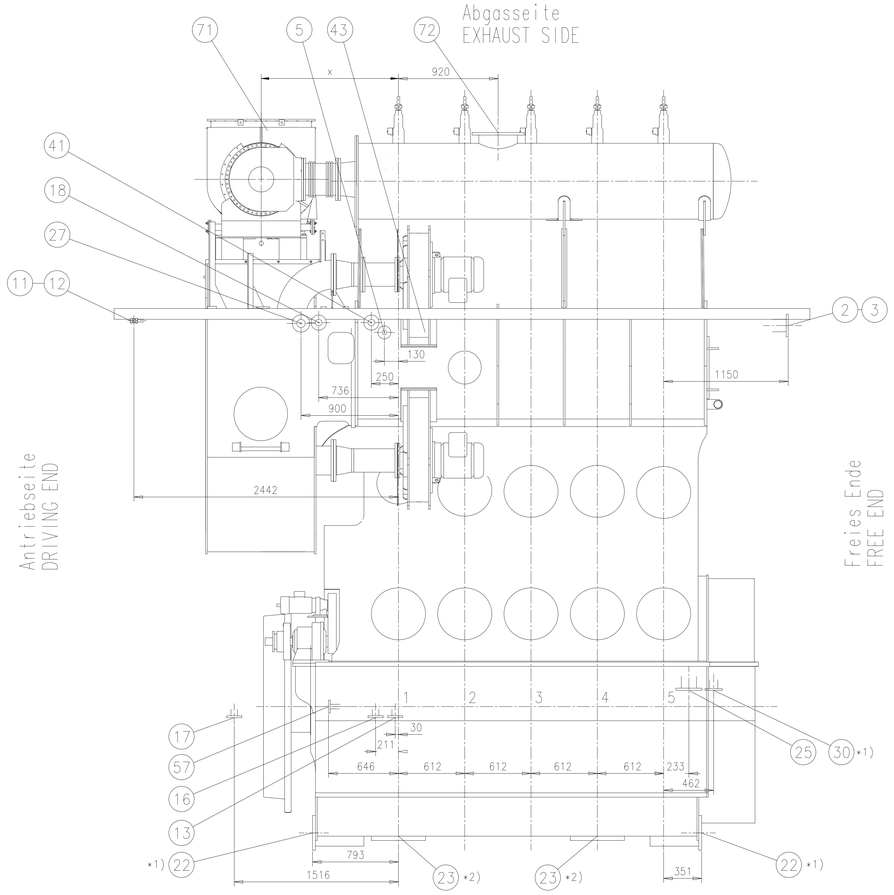
Rohranschlussplan

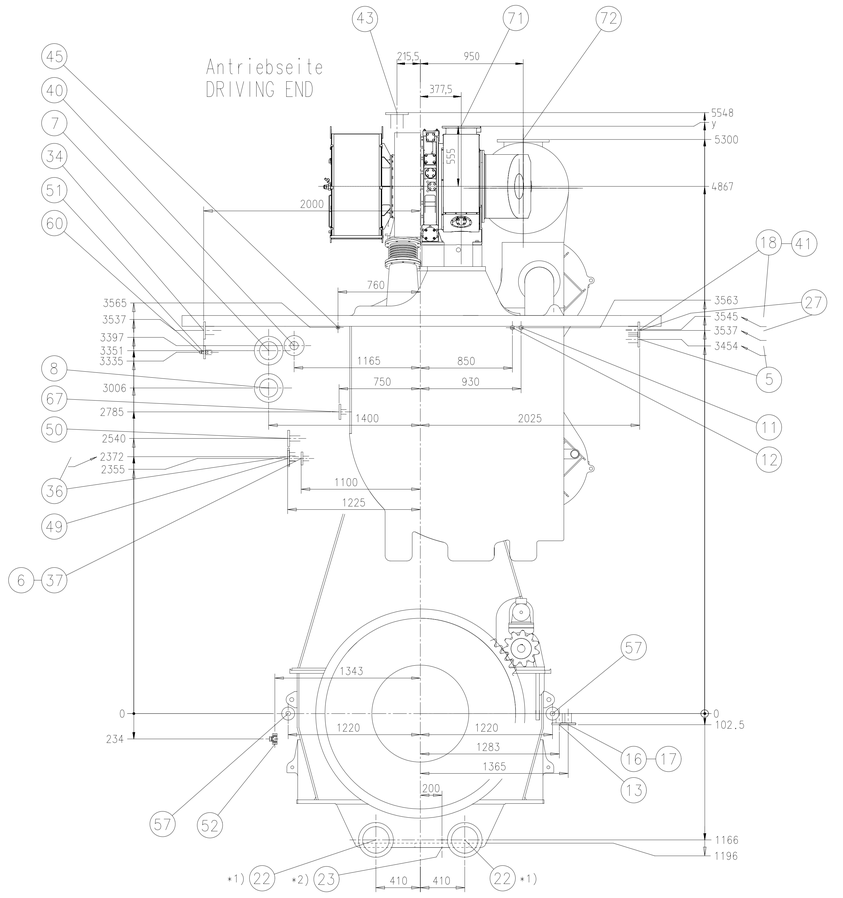
Units	mm kg	NX	Basic Material	Net Weight
SURFACE PROTECTION SEE GROUP 0344	Made 13.02.2016 cku010 kubler	Scale 1:1	Size A0	Page 2/2	Material ID
TOLERANCING PRINCIPLE ISO8015	Chkd 12.04.2016 ihe003 Herzog	Design Group 8020			
GENERAL TOLERANCES ACCORDING TO ISO2768-mK	Appd 12.04.2016 bha009 Haag	Drawing ID DAAD075782		Rev. C	

Copyright Winterthur Gas & Diesel Ltd. All rights reserved. By having possession of the drawing the recipient recognizes and honours these rights. Neither the whole nor any part of this drawing may be used in any way for construction, fabrication, marketing or any other purpose nor copied in any way nor made accessible to third parties without the previous written consent of Winterthur Gas & Diesel Ltd.

ORIGINAL DRAWING - confidential

Download
"DXF file"





Gasaustritt-Stellung GAS OUTLET POSITION	x	y
0°	1267	5422
15°	1410	5403
30°	1544	5348
45°	1659	5259

*1) Optionelle Ausfuehrung (wenn verlangt)
OPTIONAL EXECUTION (IF REQUIRED)

*2) Standard Ausfuehrung
STANDARD EXECUTION
Vorschlag.Endgueltige Position
ist mit Werft zu bestimmen
PROPOSAL. FINAL POSITION TO BE DETERMINATED
IN ACCORDANCE WITH SHIPYARD

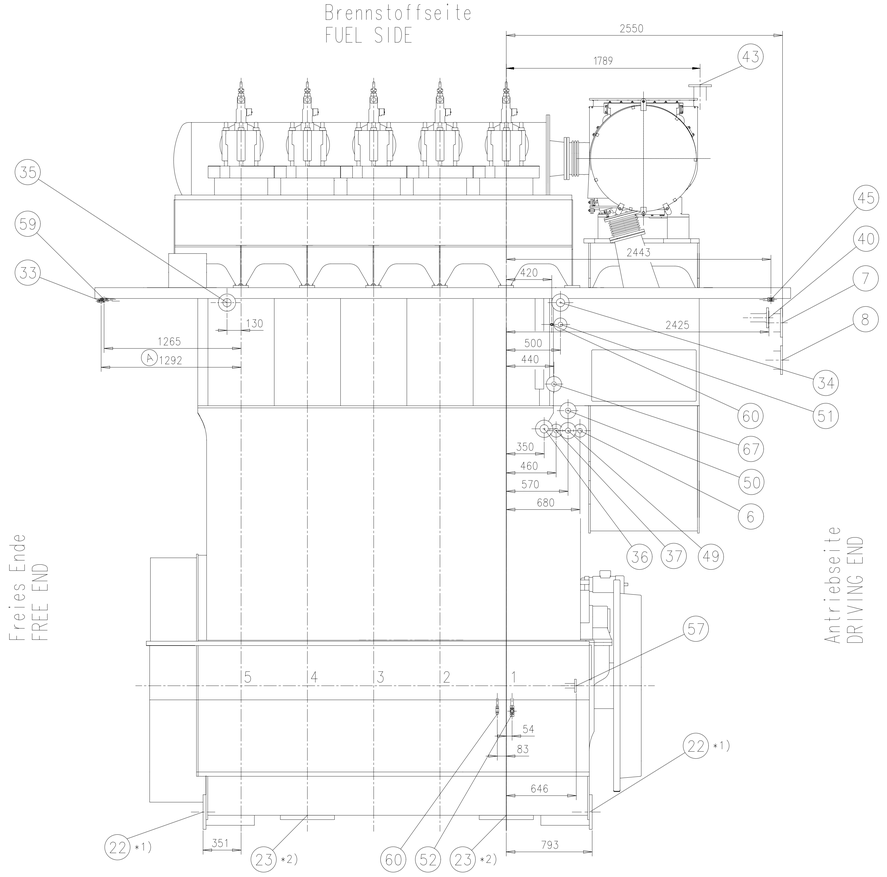
Alle Flanschanschluesse am Motor sind mit Gegenflanschen versehen (Blindflansch), ausgenommen der Anschluss fuer den Gasaustritt am Turbolader. Die Blindflansche sind nach dem betreffenden Rohrdurchmesser des Werftanschlusses aufzubohren.
THE PIPE CONNECTIONS ON THE ENGINE ARE SUPPLIED WITH MATING FLANGES (BLIND), WITH EXCEPTION OF THE TURBOCHARGER EXHAUST GAS OUTLET. BLIND FLANGES TO BE DRILLED TO MATCH PIPE DIA SUPPLIED BY THE SHIPYARD.

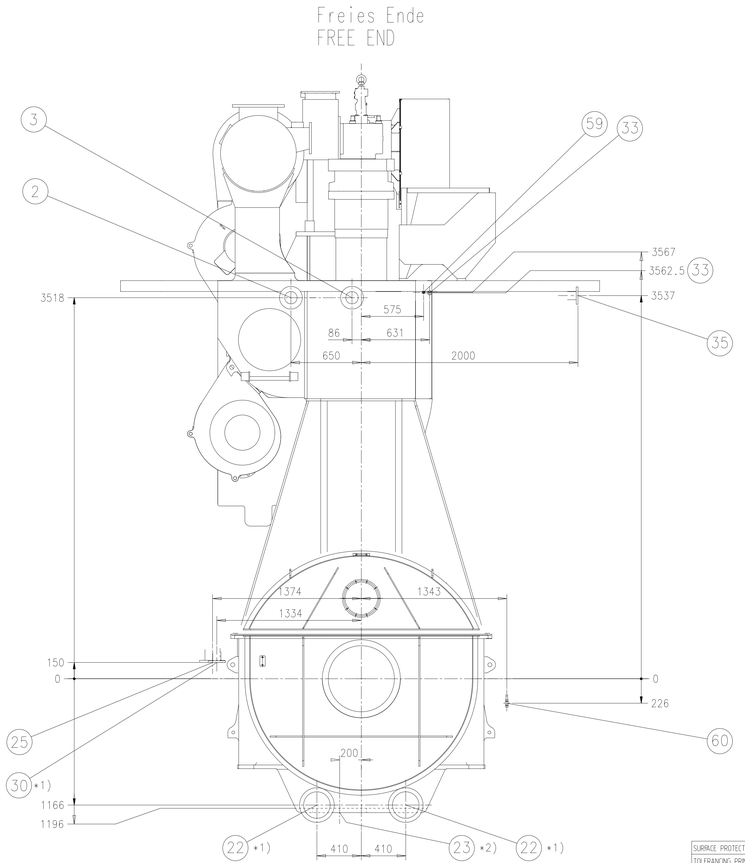
DIMENSIONS FOR REFERENCE ONLY.
TECHNICAL MODIFICATIONS RESERVED.
LATER ADAPTIONS ARE POSSIBLE BASED ON PROJECT REQUIREMENTS AND RELATED DETAIL DESIGN
THIS PIPE CONNECTION PLAN MAY NOT BE USED FOR FINAL DESIGN!

Die Gewinde-Anschluesse werden komplett geliefert
SCREWED CONNECTIONS ARE SUPPLIED COMPLETE

1 x MET37MB

Internes TL Oelsystem
INTERNAL TC OIL SYSTEM





Netweight 0,001										
1	001	107.390.729.500	FLANGE DIMENSIONS		107.390.729					0,001
Quantity PER ENGINE	SEQ NO	Material ID	Material Name Dimension, Occ		Standard or Drawing		Basic Material Material Standard			Weight GR.NET
DAAD321221	Prev. replaces No.						Q-Code XXXXX			Main Drw. H
Material	Mod	Number	Drawn date	Number	Drawn date	Number	Drawn date	Number	Drawn date	Standard ISO

WIN GD Winterthur Gas & Diesel

Product 5X35-B

PIPE CONNECTION PLAN
Rohranschlussplan

Units	mm kg	NX	Basic Material			Net Weight
SURFACE PROTECTION SEE GROUP 0344	Mode	15.03.2019	Sudant Deepade	Scale 1:20	Size A0	Page 1/2
TOLERANCING PRINCIPLE ISO8015	Chkd	15.03.2019	hdo002 DOmp	Design Group 8020	Drawing ID DAAD113043	Rev. –
GENERAL TOLERANCES ACCORDING TO ISO2768-mK	Appd	15.03.2019	mda006 Dacic			

Copyright Winterthur Gas & Diesel Ltd. All rights reserved. By having possession of the drawing the recipient recognises and honours these rights. Neither the whole nor any part of this drawing may be used in any way for construction, fabrication, marketing or any other purpose nor copied in any way nor made accessible to third parties without the previous written consent of Winterthur Gas & Diesel Ltd.

				Ko.Gr. KO.GR.	Leitungs-Anschluesse PIPE-CONNECTIONS: Freies Ende FREE END	Antriebseite DRIVING END	Abgasseite EXHAUST SIDE	Brennstoffseite FUEL SIDE
1		Zylinderkuehlwasser Eintritt CYLINDER COOLING WATER INLET	DN PN	8301	*Nicht benoetigt NOT USED*			
2		Zylinderkuehlwasser Eintritt CYLINDER COOLING WATER INLET	DN 100 PN 6	8305	X		X	
3		Zylinderkuehlwasser Austritt CYLINDER COOLING WATER OUTLET	DN 100 PN 6	8310	X		X	
4		Zylinderkuehlwasser Entlueftung Entlueftung CYLINDER COOLING WATER VENTING VENTING	DN PN	8310	*Nicht benoetigt NOT USED*			
5		Zylinderkuehlwasser Entleerung Austritt CYLINDER COOLING WATER DRAIN OUTLET	DN 32 PN 6	8313		X	X	
6		SLK Entleerung Austritt SAC DRAIN OUTLET	DN 32 PN 6	8314		X		X
7		SLK-NT-Kuehlwasser Eintritt SAC-LT-COOLING WATER INLET	DN 150 PN 6	8335		X		X
8		SLK-NT-Kuehlwasser Austritt SAC-LT-COOLING WATER OUTLET	DN 150 PN 6	8335		X		X
9		SLK-HT-Kuehlwasser Eintritt SAC-HT-COOLING WATER INLET	DN PN	8335	*Nicht benoetigt NOT USED*			
10		SLK-HT-Kuehlwasser Austritt SAC-HT-COOLING WATER OUTLET	DN PN	8335	*Nicht benoetigt NOT USED*			
11		Wasser fuer Reinigungsanlage TL und SLK Eintritt WATER FOR CLEANING PLANT TC AND SAC INLET	DN 20 PN 16	8338		X	X	
12		Luft fuer Reinigungsanlage TL und SLK Eintritt AIR FOR CLEANING PLANT TC AND SAC INLET	DN 20 PN 16	8338		X	X	
13		Oeliges Wasser vom Receiver Austritt OILY WATER FROM RECEIVER OUTLET	DN 50 PN 6	8352		X	X	
14		Turbolader Schmutzwasser Austritt TURBOCHARGER DIRTY WATER OUTLET	DN PN	8355	*Nicht benoetigt NOT USED*			
15		Ablauf vom Wasserabscheider Austritt WATER DRAIN FROM WATERSEPERATOR OUTLET	DN PN	8356	*Nicht benoetigt NOT USED*			
16		SLK Kondenswasser Austritt SAC CONDENSATE WATER OUTLET	DN 50 PN 6	8357		X	X	
17		SLK Waschwasser Austritt SAC WASHING WATER OUTLET	DN 50 PN 6	8357		X	X	
18		SLK Entlueftung Entlueftung SAC VENTING VENTING	DN 50 PN 6	8357		X	X	
19								
20								
21								
22	siehe Detail SEE DETAIL	Oelablauf Grundplatte Horizontal OIL DRAIN BEDPLATE HORIZONTAL		1110	X	X		
23	siehe Detail SEE DETAIL	Oelablauf Grundplatte Vertikal OIL DRAIN BEDPLATE VERTICAL		1110	X	X		
24		Zylinder Schmieroel Austritt CYLINDER LUB. OIL OUTLET	DN PN	8472	*Nicht benoetigt NOT USED*			
25		Hauptschmieroel Eintritt MAIN LUBRICATING OIL INLET	DN 125 PN 6	8406	X		X	

				Ko.Gr. KO.GR.	Leitungs-Anschluesse PIPE-CONNECTIONS: Freies Ende FREE END	Antriebseite DRIVING END	Abgasseite EXHAUST SIDE	Brennstoffseite FUEL SIDE
26		Schmieroel Turbolader Eintritt LUBRICATING OIL TURBOCHARGER INLET	DN PN	8430	*Nicht benoetigt NOT USED*			
27		Schmieroel Turbolader Austritt LUBRICATING OIL TURBOCHARGER OUTLET	DN 50 PN 6	8431		X	X	
28		Spueloel Automatikfilter Austritt FLUSHING OIL AUTOMATIC FILTER OUTLET	DN PN	8445	*Nicht benoetigt NOT USED*			
29		Schmutzoel Ablauf Versorgungseinheit Austritt DIRTY OIL DRAIN SUPPLY UNIT OUTLET	DN PN	8452	*Nicht benoetigt NOT USED*			
*1) 30		Schmieroel Kreuzkopf Eintritt LUBRICATING OIL CROSSHEAD INLET	DN50 PN16	8455	X		X	
31		Leckagen vom Motor Austritt DIRTY OIL LEAKAGE FROM ENGINE OUTLET	DN PN	8463	*Nicht benoetigt NOT USED*			
32		Zylinder Schmieroel Eintritt CYLINDER LUB. OIL INLET	DN PN	8473	*Nicht benoetigt NOT USED*			
33		Zylinder Schmieroel Eintritt CYLINDER LUB. OIL INLET	DN 20 PN 3	8475	X			X
34		Leckoel Antriebseite Austritt LEAKAGE OIL DRIVING END OUTLET	DN 65 PN 6	8482		X		X
35		Leckoel Freies Ende Austritt LEAKAGE OIL FREE END OUTLET	DN 65 PN 6	8483	X			X
36		Schmutzoel Kolbenunterseite Austritt DIRTY OIL PISTON UNDERSIDE OUTLET	DN 65 PN 6	8487		X		X
37		Leckoel Stopfbuechse Austritt LEAKAGE OIL GLAND BOX OUTLET	DN 32 PN 6	8488		X		X
38		Oelablaufltg. Versorgungseinheit Austritt OIL PIPE DRAIN SUPPLY UNIT OUTLET	DN PN	8454	*Nicht benoetigt NOT USED*			
39		Leckageablauf Zylinderblock Austritt LEAKAGE DRAIN CYLINDER BLOCK OUTLET	DN PN	8462	*Nicht benoetigt NOT USED*			
40		Anlassluft Eintritt STARTING AIR PIPE INLET	DN 65 PN 40	8605		X		X
41		Entlueftung Kurbelgehaeuse Austritt VENTING CRANKCASE OUTLET	DN 50 PN 6	8608		X	X	
42		Entlueftung Waste Gate Austritt VENTING WASTE GATE OUTLET	DN PN	8609	*Nicht benoetigt NOT USED*			
43		Entlueftung Turbolader Austritt VENTING TURBOCHARGER OUTLET	DN 50 PN 6	8610		X	X	
44		Entlueftung Zylinderkuehlwasser Austritt VENTING CYLINDER COOLING WATER OUTLET	DN PN	8611	*Nicht benoetigt NOT USED*			
45		Steuerluftversorgung Eintritt CONTROL AIR SUPPLY INLET	DN 15 PN 12	8630		X		X
46		Steuerluftversorgung Eintritt CONTROL AIR SUPPLY INLET	DN PN	4605	*Nicht benoetigt NOT USED*			
47								
48								
49		Brennstoff Eintritt FUEL INLET	DN 40 PN 40	8702		X		X
50		Brennstoffruecklauf Austritt FUEL RETURN OUTLET	DN 40 PN 40	8704		X		X

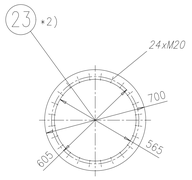
				Ko.Gr. KO.GR.	Leitungs-Anschluesse PIPE-CONNECTIONS: Freies Ende FREE END	Antriebseite DRIVING END	Abgasseite EXHAUST SIDE	Brennstoffseite FUEL SIDE
51		Leckbrennstoff Rail Unit Austritt FUEL LEAKAGE RAIL UNIT OUTLET	DN 32 PN 6	8740		X		X
52		Leckbrennstoff Austritt FUEL LEAKAGE OUTLET	DN 20 PN 6	8744		X		X
53		Leckbrennstoff HD-Leitungen Austritt FUEL LEAKAGE HP-PIPES OUTLET	DN PN	8742	*Nicht benoetigt NOT USED*			
54		Leckbrennstoff Einspritzpumpe Austritt FUEL LEAKAGE INJECTION PUMP OUTLET	DN PN	8743	*Nicht benoetigt NOT USED*			
55								
56		Leckbrennstoff Einspritzeinheit Austritt FUEL LEAKAGE ICU OUTLET	DN PN	8745	*Nicht benoetigt NOT USED*			
57		Diverse Leckagen Austritt VARIOUS LEAKAGE OUTLET	DN 25 PN 6	8746		X	X	X
58								
59		Begleitheizung Brennstoff Eintritt TRACE HEATING FUEL INLET	DN 12 PN 16	8810	X			X
60		Begleitheizung Brennstoff Austritt TRACE HEATING FUEL OUTLET	DN 12 PN 16	8810		X		X
61		Begleitheizung Brennstoff Eintritt TRACE HEATING FUEL INLET	DN PN	8812	*Nicht benoetigt NOT USED*			
62		Begleitheizung Brennstoff Austritt TRACE HEATING FUEL OUTLET	DN PN	8812	*Nicht benoetigt NOT USED*			
63		Begleitheizung Brennstoffzirkulation Eintritt TRACE HEATING FUEL CIRCULATION INLET	DN PN	8820	*Nicht benoetigt NOT USED*			
64		Begleitheizung Brennstoffzirkulation Austritt TRACE HEATING FUEL CIRCULATION OUTLET	DN PN	8823	*Nicht benoetigt NOT USED*			
65								
66								
67		Feuerloesch Anlage Zylinderblock Eintritt FIRE EXTINGUISHING PLANT CYLINDER BLOCK INLET	DN 32 PN 16	8830		X		X
68		Feuerloesch Anlage Rail Unit Eintritt FIRE EXTINGUISHING PLANT RAIL UNIT INLET	DN PN	8831	*Nicht benoetigt NOT USED*			
69		Feuerloesch Anlage Rail Unit Eintritt FIRE EXTINGUISHING PLANT RAIL UNIT INLET	DN PN	8832	*Nicht benoetigt NOT USED*			
70								
71	siehe Detail SEE DETAIL	Abgas Turbolader Austritt EXHAUST GAS TURBOCHARGER OUTLET		6506 6509		X	X	
72	siehe Detail SEE DETAIL	Abgas Bypass Austritt EXHAUST GAS BY-PASS OUTLET		8103 8108		X	X	
73								
74								
75								

Abmasse der Flansche siehe 4-107.390.729

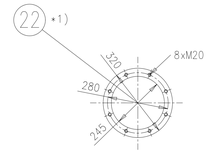
72 Bypass zur Auspuffleitung
EXHAUST BY-PASS



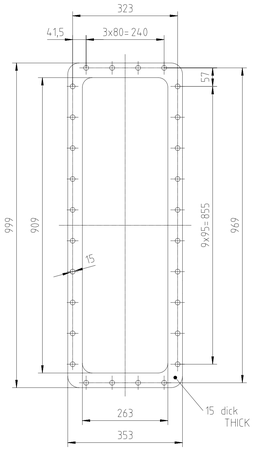
fuer vertikalen Oelablauf
FOR VERTICAL LUB. OIL DRAIN



fuer horizontalen Oelablauf
Freies Ende und Antriebseite
FOR HORIZONTAL LUB. OIL DRAIN
FREE END AND DRIVING END



71 Gas-Austritt vom Turbolader
GAS OUTLET FROM TURBOCHARGER



1 x MET37MB

Freie gaenz. Nr.					Q-Code XXXXX Standard ISO	Main Drw. H
Appr.	Number	Drawn date	Number	Drawn date	Number	Drawn date	Number	Drawn date
WIN GD Winterthur Gas & Diesel	Product 5X35-B	PIPE CONNECTION PLAN Rohranschlussplan				
Units mm kg	NX	Basic Material				Net Weight
SURFACE PROTECTION SEE GROUP 0344	Made 15.03.2019 Sudant Deogade	Scale 1:20	Size A0	Page 2/2	Material 0	
TOLERANCING PRINCIPLE ISO8015	Chkd 15.03.2019 hdo002 Dörre	Design Group 8020	Drawing 0 DAAD113043		Rev. –	
GENERAL TOLERANCES ACCORDING TO ISO2768-mK	Appd 15.03.2019 mda006 Dacic					

Approved

DRAWING, drawing, confidential

Copyright Winterthur Gas & Diesel Ltd. All rights reserved. By having possession of the drawing the recipient recognizes and honours these rights. Neither the whole nor any part of this drawing may be used in any way for construction, fabrication, marketing or any other purpose nor copied in any way nor made accessible to third parties without the previous written consent of Winterthur Gas & Diesel Ltd.

ISO

PN	DN	OUT.DIA.	THICK	DIM. FOR SCREWS			
6 bar	25	100	14	75	4	M10	11
	32	120	16	90	4	M12	14
	40	130	16	100	4	M12	14
	50	140	16	110	4	M12	14
	65	160	16	130	4	M12	14
	80	190	18	150	4	M16	18
	100	210	18	170	4	M16	18
	125	240	20	200	8	M16	18
	150	265	20	225	8	M16	18
	200	320	22	280	8	M16	18
	250	375	24	335	12	M16	18
	300	440	24	395	12	M20	22
	350	490	26	445	12	M20	22
	400	540	28	495	16	M20	22
	450	595	30	550	16	M20	22
	500	645	30	600	20	M20	22

PN	DN	OUT.DIA.	THICK	DIM. FOR SCREWS			
16 bar	25	115	16	85	4	M12	14
	32	140	18	100	4	M16	18
	40	150	18	110	4	M16	18
	50	165	19	125	4	M16	18
	65	185	20	145	8	M16	18
	80	200	20	160	8	M16	18
	100	220	22	180	8	M16	18
	125	250	22	210	8	M16	18
	150	285	24	240	8	M20	22
	200	340	26	295	12	M20	22
	250	405	32	355	12	M24	26
	300	460	32	410	12	M24	26
	350	520	35	470	16	M24	26
	400	580	38	525	16	M27	30
	450	640	42	585	20	M27	30
	500	715	46	650	20	M30	33

PN	DN	OUT.DIA.	THICK	DIM. FOR SCREWS			
10 bar	25	115	16	85	4	M12	14
	32	140	18	100	4	M16	18
	40	150	18	110	4	M16	18
	50	165	19	125	4	M16	18
	65	185	20	145	8	M16	18
	80	200	20	160	8	M16	18
	100	220	22	180	8	M16	18
	125	250	22	210	8	M16	18
	150	285	24	240	8	M20	22
	200	340	24	295	8	M20	22
	250	395	26	350	12	M20	22
	300	445	26	400	12	M20	22
	350	505	28	460	16	M20	22
	400	565	32	515	16	M24	26
	450	615	38	565	20	M24	26
	500	670	38	620	20	M24	26

PN	DN	OUT.DIA.	THICK	DIM. FOR SCREWS			
40 bar	25	115	16	85	4	M12	14
	32	140	18	100	4	M16	18
	40	150	18	110	4	M16	18
	50	165	20	125	4	M16	18
	65	185	22	145	8	M16	18
	80	200	24	160	8	M16	18
	100	235	26	190	8	M20	22
	125	270	28	220	8	M24	26
	150	300	30	250	8	M24	26
	200	375	36	320	12	M27	30
	250	450	44	385	12	M30	33
	300	515	48	450	16	M30	33
	350	580	54	510	16	M33	36
	400	660	60	585	16	M36	39

JIS

PN	DN	OUT.DIA.	THICK	DIM. FOR SCREWS			
5 bar	25	95	10	75	4	M10	12
	32	115	12	90	4	M12	15
	40	120	12	95	4	M12	15
	50	130	14	105	4	M12	15
	65	155	14	130	4	M12	15
	80	180	14	145	4	M16	19
	100	200	16	165	8	M16	19
	125	235	16	200	8	M16	19
	150	265	18	230	8	M16	19
	200	320	20	280	8	M20	23
	250	385	22	345	12	M20	23
	300	430	22	390	12	M20	23
	350	480	24	435	12	M22	25
	400	540	24	495	16	M22	25
	450	605	24	555	16	M22	25
	500	655	24	605	20	M22	25

PN	DN	OUT.DIA.	THICK	DIM. FOR SCREWS			
16 bar	25	125	14	90	4	M16	19
	32	135	16	100	4	M16	19
	40	140	16	105	4	M16	19
	50	155	16	120	8	M16	19
	65	175	18	140	8	M16	19
	80	200	20	160	8	M20	23
	100	225	22	185	8	M20	23
	125	270	22	225	8	M22	25
	150	305	24	260	12	M22	25
	200	350	26	305	12	M22	25
	250	430	28	380	12	M24	27
	300	480	30	430	16	M24	27
	350	540	34	480	16	M30	33
	400	605	38	540	16	M30	33
	450	675	40	605	20	M30	33
	500	730	42	660	20	M30	33

PN	DN	OUT.DIA.	THICK	DIM. FOR SCREWS			
10 bar	25	125	14	90	4	M16	19
	32	135	16	100	4	M16	19
	40	140	16	105	4	M16	19
	50	155	16	120	4	M16	19
	65	175	18	140	4	M16	19
	80	185	18	150	8	M16	19
	100	210	18	175	8	M16	19
	125	250	20	210	8	M20	23
	150	280	22	240	8	M20	23
	200	330	22	290	12	M20	23
	250	400	24	355	12	M22	25
	300	445	24	400	16	M22	25
	350	490	26	445	16	M22	25
	400	560	28	510	16	M24	27
	450	620	30	565	20	M24	27
	500	675	30	620	20	M24	27

PN	DN	OUT.DIA.	THICK	DIM. FOR SCREWS			
30 bar	25	130	20	95	4	M16	19
	32	140	22	105	4	M16	19
	40	160	22	120	4	M20	23
	50	165	22	130	8	M16	19
	65	200	26	160	8	M20	23
	80	210	28	170	8	M20	23
	100	240	32	195	8	M22	25
	125	275	36	230	8	M22	25
	150	325	38	275	12	M24	27
	200	370	42	320	12	M24	27
	250	450	48	390	12	M30	33
	300	515	52	450	16	M30	33
	350	560	54	495	16	M30	33
	400	630	60	560	16	M36	39

Substitute for:

PC	Q-Code					
		X	X	X	X	X

Modif												
	A	EAAD084180	04.10.2012									
		Number	Drawn Date		Number	Drawn Date		Number	Drawn Date		Number	Drawn Date

WÄRTSILÄ

Product
W-2S

Flange Dimensions

Made	19.09.2007	N. Brand	Main Drw.	Page 1 / 1	Material ID **107.390.729.500**
Chkd	27.09.2007	M. Frei	Design Group **8020**		
Appd	27.09.2007	B. Haag		Drawing ID **107.390.729**	Rev **A**

Copyright Wärtsilä. All rights reserved. By taking possession of the drawing, the recipient recognizes and honors these rights. Neither the whole nor any part of this drawing may be used in any way for construction, fabrication, marketing or any other purpose nor copied in any way nor made accessible to third parties without the previous written consent of Wärtsilä.

WinGD-5X35-B _Pipe Connection Plan

TRACK CHANGES

DATE	SUBJECT	DESCRIPTION
2018-01-30	DRAWING SET	First web upload
2019-05-15	DAAD113043	Pipe connection plan for Turbocharger type 1 x MET37MB has been added.
2021-05-22	PAAD219720	Revised Pipe Connection Plan for Turbocharger type 1xA160-L has been updated.

DISCLAIMER

© Copyright by Winterthur Gas & Diesel Ltd.
All rights reserved. No part of this document may be reproduced or copied in any form or by any means (electronic, mechanical, graphic, photocopying, recording, taping or other information retrieval systems) without the prior written permission of the copyright owner.

THIS PUBLICATION IS DESIGNED TO PROVIDE AN ACCURATE AND AUTHORITATIVE INFORMATION WITH REGARD TO THE SUBJECT-MATTER COVERED AS WAS AVAILABLE AT THE TIME OF PRINTING. HOWEVER, THE PUBLICATION DEALS WITH COMPLICATED TECHNICAL MATTERS SUITED ONLY FOR SPECIALISTS IN THE AREA, AND THE DESIGN OF THE SUBJECT-PRODUCTS IS SUBJECT TO REGULAR IMPROVEMENTS, MODIFICATIONS AND CHANGES. CONSEQUENTLY, THE PUBLISHER AND COPYRIGHT OWNER OF THIS PUBLICATION CAN NOT ACCEPT ANY RESPONSIBILITY OR LIABILITY FOR ANY EVENTUAL ERRORS OR OMISSIONS IN THIS BOOKLET OR FOR DISCREPANCIES ARISING FROM THE FEATURES OF ANY ACTUAL ITEM IN THE RESPECTIVE PRODUCT BEING DIFFERENT FROM THOSE SHOWN IN THIS PUBLICATION. THE PUBLISHER AND COPYRIGHT OWNER SHALL UNDER NO CIRCUMSTANCES BE HELD LIABLE FOR ANY FINANCIAL CONSEQUENTIAL DAMAGES OR OTHER LOSS, OR ANY OTHER DAMAGE OR INJURY, SUFFERED BY ANY PARTY MAKING USE OF THIS PUBLICATION OR THE INFORMATION CONTAINED HEREIN.