Available executions

Execution No.	Material ID	Cylinder No.	Attribute 1: Turbocharger lubrication		Attribute 2: Booster pumps for crosshead lubrication.	
			INTERNAL	EXTERNAL	WITH	WITHOUT
001	PAAD250618	5		X	X	
002	PAAD250619	5	X		X	
003	PAAD250620	5		X		X
004	PAAD250621	5	X			X
005	PAAD250847	6		X	X	
006	PAAD250848	6	X		X	
007	PAAD250849	6		X		X
008	PAAD250850	6	X			X
009	PAAD250859	7		X	X	
010	PAAD250860	7	X		X	
011	PAAD250863	7		X		X
012	PAAD250865	7	X			X
013	PAAD250893	8		X	X	
014	PAAD250894	8	X		X	
015	PAAD250895	8		X		X
016	PAAD250896	8	X			X

NOTE
The above executions can be configured using the Engine Configurator.
Detailed guidance for the executions is provided within the Marine Installation Manual (MIM). If a specific execution of interest is not shown in the above table, then it may still be under development or not available. For further information or in case of a project-specific request, WinGD must be contacted directly.

This publication is designed to provide accurate and authoritative information with regard to the subject-matter covered as it was available at the time of printing. However, the publication deals with complicated technical matters suited only for specialists in the area, and the design of the subject-products is subject to regular improvements, modifications and changes. Consequently, the publisher and copyright owner of this publication cannot accept any responsibility or liability for any eventual errors or omissions in this document or for discrepancies arising from the features of any actual item in the respective product being different from those shown in this publication. The publisher and copyright owner shall under no circumstances be held liable for any financial consequential damages or other loss, or any other damage or injury, suffered by any party making use of this publication or the information contained herein.

Prod. X35-B

Change History

Rev.	Creator	Approver	Approval Date	Change ID	Change Synopsis	Activity Code	E	C
-	sna102				new Design			

WIN GD Winterthur Gas & Diesel

LUBRICATING OIL SYSTEM
MIDS master drawing

separate BOM available

Dimension

Scale - NX | Units [mm] [kg] | Basic Material | Net Weight 0.001

Copyright Winterthur Gas & Diesel Ltd. All rights reserved. By taking possession of the drawing the recipient recognizes and honours these rights. Neither the whole nor any part of this drawing may be used in any way for construction, fabrication, marketing or any other purpose nor copied in any way nor made accessible to third parties without the previous written consent of Winterthur Gas & Diesel Ltd.

Main Design | Design Group 9722 | Q-Code XXXXX | Standard WDS

Qty per A3 | Item ID PTAA024642 | Drawing Page/s 1/1

SURFACE PROTECTION SEE GROUP 0344

TOLERANCING PRINCIPLE ISO8015

SEQ NO	QTY	Item ID	Item Name / Dimension	Standard-ID	Basic Material	Net Weight
1	1	PAAD181323	LUBRICATING OIL SYSTEM			0.001
3	1	PAAD245338	LUBRICATING OIL SYSTEM			0.001
4	1	PAAD066760	LUBRICATING OIL DRAIN TANK			0.001
5	1	107.341.455.500	INSTRUCTION FOR FLUSHING			0.001
6	1	PAAD028663	LUBRICATING OIL DRAIN TANK			0.001

Prod.			
	5 X35-B		

Change History

Rev.	Creator	Approver	Approval Date	Change ID	Change Synopsis	Activity Code	E	C
-	dki021	mhu019	09.02.2017	EAAD087222	Legacy information. See corresponding ChangeNotice		4	-

WIN GD
Winterthur Gas & Diesel

LUBRICATING OIL SYSTEM

Bill Of Material

Dimension

Copyright **Winterthur Gas & Diesel Ltd.** All rights reserved. By taking possession of the document the recipient recognizes and honours these rights. Neither the whole nor any part of this document may be used in any way for construction, fabrication, marketing or any other purpose nor copied in any way nor made accessible to third parties without the previous written consent of **Winterthur Gas & Diesel Ltd.**

Units	[m] [kg]	Basic Material				Net Weight	0.001
Main Design	Yes	Design Group	9722	Q-Code	XXXXX	Standard	WDS
Qty per	Engine	A4	Item ID	PAAD250618		BOM Page/s	01/01

SEQ NO	QTY	Item ID	Item Name / Dimension	Standard-ID	Basic Material	Net Weight
1	1	PAAD181323	LUBRICATING OIL SYSTEM			0.001
4	1	PAAD066760	LUBRICATING OIL DRAIN TANK			0.001
5	1	107.341.455.500	INSTRUCTION FOR FLUSHING			0.001
6	1	PAAD028663	LUBRICATING OIL DRAIN TANK			0.001

Prod.				
	5 X35-B			

Change History

Rev.	Creator	Approver	Approval Date	Change ID	Change Synopsis	Activity Code	E	C
-	dki021	mhu019	09.02.2017	EAAD087222	Legacy information. See corresponding ChangeNotice		4	-

WIN GD
Winterthur Gas & Diesel

LUBRICATING OIL SYSTEM

Bill Of Material

Dimension

Copyright **Winterthur Gas & Diesel Ltd.** All rights reserved. By taking possession of the document the recipient recognizes and honours these rights. Neither the whole nor any part of this document may be used in any way for construction, fabrication, marketing or any other purpose nor copied in any way nor made accessible to third parties without the previous written consent of **Winterthur Gas & Diesel Ltd.**

Units	[m] [kg]	Basic Material				Net Weight	0.001
Main Design	Yes	Design Group	9722	Q-Code	XXXXX	Standard	WDS
Qty per	Engine	A4	Item ID	PAAD250619		BOM Page/s	01/01

SEQ NO	QTY	Item ID	Item Name / Dimension	Standard-ID	Basic Material	Net Weight
2	1	PAAD218389	LUBRICATING OIL SYSTEM			0.001
3	1	PAAD245338	LUBRICATING OIL SYSTEM			0.001
4	1	PAAD066760	LUBRICATING OIL DRAIN TANK			0.001
5	1	107.341.455.500	INSTRUCTION FOR FLUSHING			0.001
6	1	PAAD028663	LUBRICATING OIL DRAIN TANK			0.001

Prod.			
	5 X35-B		

Change History

Rev.	Creator	Approver	Approval Date	Change ID	Change Synopsis	Activity Code	E	C
-	dki021	mhu019	09.02.2017	EAAD087222	Legacy information. See corresponding ChangeNotice		4	-

WIN GD
Winterthur Gas & Diesel

LUBRICATING OIL SYSTEM

Bill Of Material

Dimension

Copyright **Winterthur Gas & Diesel Ltd.** All rights reserved. By taking possession of the document the recipient recognizes and honours these rights. Neither the whole nor any part of this document may be used in any way for construction, fabrication, marketing or any other purpose nor copied in any way nor made accessible to third parties without the previous written consent of **Winterthur Gas & Diesel Ltd.**

Units	[m] [kg]	Basic Material				Net Weight	0.001
Main Design	Yes	Design Group	9722	Q-Code	XXXXX	Standard	WDS
Qty per	Engine	A4	Item ID	PAAD250620		BOM Page/s	01/01

SEQ NO	QTY	Item ID	Item Name / Dimension	Standard-ID	Basic Material	Net Weight
2	1	PAAD218389	LUBRICATING OIL SYSTEM			0.001
4	1	PAAD066760	LUBRICATING OIL DRAIN TANK			0.001
5	1	107.341.455.500	INSTRUCTION FOR FLUSHING			0.001
6	1	PAAD028663	LUBRICATING OIL DRAIN TANK			0.001

Prod.				
	5 X35-B			

Change History

Rev.	Creator	Approver	Approval Date	Change ID	Change Synopsis	Activity Code	E	C
-	dki021	mhu019	09.02.2017	EAAD087222	Legacy information. See corresponding ChangeNotice		4	-

WIN GD
Winterthur Gas & Diesel

LUBRICATING OIL SYSTEM

Bill Of Material

Dimension

Copyright **Winterthur Gas & Diesel Ltd.** All rights reserved. By taking possession of the document the recipient recognizes and honours these rights. Neither the whole nor any part of this document may be used in any way for construction, fabrication, marketing or any other purpose nor copied in any way nor made accessible to third parties without the previous written consent of **Winterthur Gas & Diesel Ltd.**

Units	[m] [kg]	Basic Material				Net Weight	0.001
Main Design	Yes	Design Group	9722	Q-Code	XXXXX	Standard	WDS
Qty per	Engine	A4	Item ID	PAAD250621		BOM Page/s	01/01

SEQ NO	QTY	Item ID	Item Name / Dimension	Standard-ID	Basic Material	Net Weight
1	1	PAAD181323	LUBRICATING OIL SYSTEM			0.001
3	1	PAAD245338	LUBRICATING OIL SYSTEM			0.001
4	1	PAAD030490	LUBRICATING OIL DRAIN TANK			0.001
5	1	107.341.455.500	INSTRUCTION FOR FLUSHING			0.001
6	1	PAAD028663	LUBRICATING OIL DRAIN TANK			0.001

Prod.				
	6 X35-B			

Change History

Rev.	Creator	Approver	Approval Date	Change ID	Change Synopsis	Activity Code	E	C
-	dki021	mhu019	09.02.2017	EAAD087222	Legacy information. See corresponding ChangeNotice		4	-

WIN GD
Winterthur Gas & Diesel

LUBRICATING OIL SYSTEM

Bill Of Material

Dimension

Copyright **Winterthur Gas & Diesel Ltd.** All rights reserved. By taking possession of the document the recipient recognizes and honours these rights. Neither the whole nor any part of this document may be used in any way for construction, fabrication, marketing or any other purpose nor copied in any way nor made accessible to third parties without the previous written consent of **Winterthur Gas & Diesel Ltd.**

Units	[m] [kg]	Basic Material				Net Weight	0.001
Main Design	Yes	Design Group	9722	Q-Code	XXXXX	Standard	WDS
Qty per	Engine	A4	Item ID	PAAD250847		BOM Page/s	01/01

SEQ NO	QTY	Item ID	Item Name / Dimension	Standard-ID	Basic Material	Net Weight
1	1	PAAD181323	LUBRICATING OIL SYSTEM			0.001
4	1	PAAD030490	LUBRICATING OIL DRAIN TANK			0.001
5	1	107.341.455.500	INSTRUCTION FOR FLUSHING			0.001
6	1	PAAD028663	LUBRICATING OIL DRAIN TANK			0.001

Prod.				
	6 X35-B			

Change History

Rev.	Creator	Approver	Approval Date	Change ID	Change Synopsis	Activity Code	E	C
-	dki021	mhu019	09.02.2017	EAAD087222	Legacy information. See corresponding ChangeNotice		4	-

WIN GD
Winterthur Gas & Diesel

LUBRICATING OIL SYSTEM

Bill Of Material

Dimension

Copyright **Winterthur Gas & Diesel Ltd.** All rights reserved. By taking possession of the document the recipient recognizes and honours these rights. Neither the whole nor any part of this document may be used in any way for construction, fabrication, marketing or any other purpose nor copied in any way nor made accessible to third parties without the previous written consent of **Winterthur Gas & Diesel Ltd.**

Units	[m] [kg]	Basic Material				Net Weight	0.001
Main Design	Yes	Design Group	9722	Q-Code	XXXXX	Standard	WDS
Qty per	Engine	A4	Item ID	PAAD250848		BOM Page/s	01/01

SEQ NO	QTY	Item ID	Item Name / Dimension	Standard-ID	Basic Material	Net Weight
2	1	PAAD218389	LUBRICATING OIL SYSTEM			0.001
3	1	PAAD245338	LUBRICATING OIL SYSTEM			0.001
4	1	PAAD030490	LUBRICATING OIL DRAIN TANK			0.001
5	1	107.341.455.500	INSTRUCTION FOR FLUSHING			0.001
6	1	PAAD028663	LUBRICATING OIL DRAIN TANK			0.001

Prod.				
	6 X35-B			

Change History

Rev.	Creator	Approver	Approval Date	Change ID	Change Synopsis	Activity Code	E	C
-	dki021	mhu019	09.02.2017	EAAD087222	Legacy information. See corresponding ChangeNotice		4	-

WIN GD
Winterthur Gas & Diesel

LUBRICATING OIL SYSTEM

Bill Of Material

Dimension

Copyright **Winterthur Gas & Diesel Ltd.** All rights reserved. By taking possession of the document the recipient recognizes and honours these rights. Neither the whole nor any part of this document may be used in any way for construction, fabrication, marketing or any other purpose nor copied in any way nor made accessible to third parties without the previous written consent of **Winterthur Gas & Diesel Ltd.**

Units	[m] [kg]	Basic Material				Net Weight	0.001
Main Design	Yes	Design Group	9722	Q-Code	XXXXX	Standard	WDS
Qty per	Engine	A4	Item ID	PAAD250849		BOM Page/s	01/01

SEQ NO	QTY	Item ID	Item Name / Dimension	Standard-ID	Basic Material	Net Weight
2	1	PAAD218389	LUBRICATING OIL SYSTEM			0.001
4	1	PAAD030490	LUBRICATING OIL DRAIN TANK			0.001
5	1	107.341.455.500	INSTRUCTION FOR FLUSHING			0.001
6	1	PAAD028663	LUBRICATING OIL DRAIN TANK			0.001

Prod.				
	6 X35-B			

Change History

Rev.	Creator	Approver	Approval Date	Change ID	Change Synopsis	Activity Code	E	C
-	dki021	mhu019	09.02.2017	EAAD087222	Legacy information. See corresponding ChangeNotice		4	-

WIN GD
Winterthur Gas & Diesel

LUBRICATING OIL SYSTEM

Bill Of Material

Dimension

Copyright **Winterthur Gas & Diesel Ltd.** All rights reserved. By taking possession of the document the recipient recognizes and honours these rights. Neither the whole nor any part of this document may be used in any way for construction, fabrication, marketing or any other purpose nor copied in any way nor made accessible to third parties without the previous written consent of **Winterthur Gas & Diesel Ltd.**

Units	[m] [kg]	Basic Material				Net Weight	0.001
Main Design	Yes	Design Group	9722	Q-Code	XXXXX	Standard	WDS
Qty per	Engine	A4	Item ID	PAAD250850		BOM Page/s	01/01

SEQ NO	QTY	Item ID	Item Name / Dimension	Standard-ID	Basic Material	Net Weight
1	1	PAAD181323	LUBRICATING OIL SYSTEM			0.001
3	1	PAAD245338	LUBRICATING OIL SYSTEM			0.001
4	1	PAAD032970	LUBRICATING OIL DRAIN TANK			0.001
5	1	107.341.455.500	INSTRUCTION FOR FLUSHING			0.001
6	1	PAAD028663	LUBRICATING OIL DRAIN TANK			0.001

Prod.				
	7 X35-B			

Change History

Rev.	Creator	Approver	Approval Date	Change ID	Change Synopsis	Activity Code	E	C
-	dki021	mhu019	09.02.2017	EAAD087222	Legacy information. See corresponding ChangeNotice		4	-

WIN GD
Winterthur Gas & Diesel

LUBRICATING OIL SYSTEM

Bill Of Material

Dimension

Copyright **Winterthur Gas & Diesel Ltd.** All rights reserved. By taking possession of the document the recipient recognizes and honours these rights. Neither the whole nor any part of this document may be used in any way for construction, fabrication, marketing or any other purpose nor copied in any way nor made accessible to third parties without the previous written consent of **Winterthur Gas & Diesel Ltd.**

Units	[m] [kg]	Basic Material				Net Weight	0.001
Main Design	Yes	Design Group	9722	Q-Code	XXXXX	Standard	WDS
Qty per	Engine	A4	Item ID	PAAD250859		BOM Page/s	01/01

SEQ NO	QTY	Item ID	Item Name / Dimension	Standard-ID	Basic Material	Net Weight
1	1	PAAD181323	LUBRICATING OIL SYSTEM			0.001
4	1	PAAD032970	LUBRICATING OIL DRAIN TANK			0.001
5	1	107.341.455.500	INSTRUCTION FOR FLUSHING			0.001
6	1	PAAD028663	LUBRICATING OIL DRAIN TANK			0.001

Prod.				
	7 X35-B			

Change History

Rev.	Creator	Approver	Approval Date	Change ID	Change Synopsis	Activity Code	E	C
-	dki021	mhu019	09.02.2017	EAAD087222	Legacy information. See corresponding ChangeNotice		4	-

WIN GD
Winterthur Gas & Diesel

LUBRICATING OIL SYSTEM

Bill Of Material

Dimension

Copyright **Winterthur Gas & Diesel Ltd.** All rights reserved. By taking possession of the document the recipient recognizes and honours these rights. Neither the whole nor any part of this document may be used in any way for construction, fabrication, marketing or any other purpose nor copied in any way nor made accessible to third parties without the previous written consent of **Winterthur Gas & Diesel Ltd.**

Units	[m] [kg]	Basic Material				Net Weight	0.001
Main Design	Yes	Design Group	9722	Q-Code	XXXXX	Standard	WDS
Qty per	Engine	A4	Item ID	PAAD250860		BOM Page/s	01/01

SEQ NO	QTY	Item ID	Item Name / Dimension	Standard-ID	Basic Material	Net Weight
2	1	PAAD218389	LUBRICATING OIL SYSTEM			0.001
3	1	PAAD245338	LUBRICATING OIL SYSTEM			0.001
4	1	PAAD032970	LUBRICATING OIL DRAIN TANK			0.001
5	1	107.341.455.500	INSTRUCTION FOR FLUSHING			0.001
6	1	PAAD028663	LUBRICATING OIL DRAIN TANK			0.001

Prod.			
	7 X35-B		

Change History

Rev.	Creator	Approver	Approval Date	Change ID	Change Synopsis	Activity Code	E	C
-	dki021	mhu019	09.02.2017	EAAD087222	Legacy information. See corresponding ChangeNotice		4	-

WIN GD
Winterthur Gas & Diesel

LUBRICATING OIL SYSTEM

Bill Of Material

Dimension

Copyright **Winterthur Gas & Diesel Ltd.** All rights reserved. By taking possession of the document the recipient recognizes and honours these rights. Neither the whole nor any part of this document may be used in any way for construction, fabrication, marketing or any other purpose nor copied in any way nor made accessible to third parties without the previous written consent of **Winterthur Gas & Diesel Ltd.**

Units	[m] [kg]	Basic Material				Net Weight	0.001
Main Design	Yes	Design Group	9722	Q-Code	XXXXX	Standard	WDS
Qty per	Engine	A4	Item ID	PAAD250863		BOM Page/s	01/01

SEQ NO	QTY	Item ID	Item Name / Dimension	Standard-ID	Basic Material	Net Weight
2	1	PAAD218389	LUBRICATING OIL SYSTEM			0.001
4	1	PAAD032970	LUBRICATING OIL DRAIN TANK			0.001
5	1	107.341.455.500	INSTRUCTION FOR FLUSHING			0.001
6	1	PAAD028663	LUBRICATING OIL DRAIN TANK			0.001

Prod.				
	7 X35-B			

Change History

Rev.	Creator	Approver	Approval Date	Change ID	Change Synopsis	Activity Code	E	C
-	dki021	mhu019	09.02.2017	EAAD087222	Legacy information. See corresponding ChangeNotice		4	-

WIN GD
Winterthur Gas & Diesel

LUBRICATING OIL SYSTEM

Bill Of Material

Dimension

Copyright **Winterthur Gas & Diesel Ltd.** All rights reserved. By taking possession of the document the recipient recognizes and honours these rights. Neither the whole nor any part of this document may be used in any way for construction, fabrication, marketing or any other purpose nor copied in any way nor made accessible to third parties without the previous written consent of **Winterthur Gas & Diesel Ltd.**

Units	[m] [kg]	Basic Material				Net Weight	0.001
Main Design	Yes	Design Group	9722	Q-Code	XXXXX	Standard	WDS
Qty per	Engine	A4	Item ID	PAAD250865		BOM Page/s	01/01

SEQ NO	QTY	Item ID	Item Name / Dimension	Standard-ID	Basic Material	Net Weight
1	1	PAAD181323	LUBRICATING OIL SYSTEM			0.001
3	1	PAAD245338	LUBRICATING OIL SYSTEM			0.001
4	1	PAAD084331	LUBRICATING OIL DRAIN TANK			0.001
5	1	107.341.455.500	INSTRUCTION FOR FLUSHING			0.001
6	1	PAAD028663	LUBRICATING OIL DRAIN TANK			0.001

Prod.				
	8 X35-B			

Change History

Rev.	Creator	Approver	Approval Date	Change ID	Change Synopsis	Activity Code	E	C
-	dki021	mhu019	09.02.2017	EAAD087222	Legacy information. See corresponding ChangeNotice		4	-

WIN GD
Winterthur Gas & Diesel

LUBRICATING OIL SYSTEM

Bill Of Material

Dimension

Copyright **Winterthur Gas & Diesel Ltd.** All rights reserved. By taking possession of the document the recipient recognizes and honours these rights. Neither the whole nor any part of this document may be used in any way for construction, fabrication, marketing or any other purpose nor copied in any way nor made accessible to third parties without the previous written consent of **Winterthur Gas & Diesel Ltd.**

Units	[m] [kg]	Basic Material				Net Weight	0.001
Main Design	Yes	Design Group	9722	Q-Code	XXXXX	Standard	WDS
Qty per	Engine	A4	Item ID	PAAD250893		BOM Page/s	01/01

SEQ NO	QTY	Item ID	Item Name / Dimension	Standard-ID	Basic Material	Net Weight
1	1	PAAD181323	LUBRICATING OIL SYSTEM			0.001
4	1	PAAD084331	LUBRICATING OIL DRAIN TANK			0.001
5	1	107.341.455.500	INSTRUCTION FOR FLUSHING			0.001
6	1	PAAD028663	LUBRICATING OIL DRAIN TANK			0.001

Prod.				
	8 X35-B			

Change History

Rev.	Creator	Approver	Approval Date	Change ID	Change Synopsis	Activity Code	E	C
-	dki021	mhu019	09.02.2017	EAAD087222	Legacy information. See corresponding ChangeNotice		4	-

WIN GD
Winterthur Gas & Diesel

LUBRICATING OIL SYSTEM

Bill Of Material

Dimension

Copyright **Winterthur Gas & Diesel Ltd.** All rights reserved. By taking possession of the document the recipient recognizes and honours these rights. Neither the whole nor any part of this document may be used in any way for construction, fabrication, marketing or any other purpose nor copied in any way nor made accessible to third parties without the previous written consent of **Winterthur Gas & Diesel Ltd.**

Units	[m] [kg]	Basic Material				Net Weight	0.001
Main Design	Yes	Design Group	9722	Q-Code	XXXXX	Standard	WDS
Qty per	Engine	A4	Item ID	PAAD250894		BOM Page/s	01/01

SEQ NO	QTY	Item ID	Item Name / Dimension	Standard-ID	Basic Material	Net Weight
2	1	PAAD218389	LUBRICATING OIL SYSTEM			0.001
3	1	PAAD245338	LUBRICATING OIL SYSTEM			0.001
4	1	PAAD084331	LUBRICATING OIL DRAIN TANK			0.001
5	1	107.341.455.500	INSTRUCTION FOR FLUSHING			0.001
6	1	PAAD028663	LUBRICATING OIL DRAIN TANK			0.001

Prod.				
	8 X35-B			

Change History

Rev.	Creator	Approver	Approval Date	Change ID	Change Synopsis	Activity Code	E	C
-	dki021	mhu019	09.02.2017	EAAD087222	Legacy information. See corresponding ChangeNotice		4	-

WIN GD
Winterthur Gas & Diesel

LUBRICATING OIL SYSTEM

Bill Of Material

Dimension

Copyright **Winterthur Gas & Diesel Ltd.** All rights reserved. By taking possession of the document the recipient recognizes and honours these rights. Neither the whole nor any part of this document may be used in any way for construction, fabrication, marketing or any other purpose nor copied in any way nor made accessible to third parties without the previous written consent of **Winterthur Gas & Diesel Ltd.**

Units	[m] [kg]	Basic Material				Net Weight	0.001
Main Design	Yes	Design Group	9722	Q-Code	XXXXX	Standard	WDS
Qty per	Engine	A4	Item ID	PAAD250895		BOM Page/s	01/01

SEQ NO	QTY	Item ID	Item Name / Dimension	Standard-ID	Basic Material	Net Weight
2	1	PAAD218389	LUBRICATING OIL SYSTEM			0.001
4	1	PAAD084331	LUBRICATING OIL DRAIN TANK			0.001
5	1	107.341.455.500	INSTRUCTION FOR FLUSHING			0.001
6	1	PAAD028663	LUBRICATING OIL DRAIN TANK			0.001

Prod.				
	8 X35-B			

Change History

Rev.	Creator	Approver	Approval Date	Change ID	Change Synopsis	Activity Code	E	C
-	dki021	mhu019	09.02.2017	EAAD087222	Legacy information. See corresponding ChangeNotice		4	-

WIN GD
Winterthur Gas & Diesel

LUBRICATING OIL SYSTEM

Bill Of Material

Dimension

Copyright **Winterthur Gas & Diesel Ltd.** All rights reserved. By taking possession of the document the recipient recognizes and honours these rights. Neither the whole nor any part of this document may be used in any way for construction, fabrication, marketing or any other purpose nor copied in any way nor made accessible to third parties without the previous written consent of **Winterthur Gas & Diesel Ltd.**

Units	[m] [kg]	Basic Material				Net Weight	0.001
Main Design	Yes	Design Group	9722	Q-Code	XXXXX	Standard	WDS
Qty per	Engine	A4	Item ID	PAAD250896		BOM Page/s	01/01

X35-B rated in speed range:
154 rpm < CMCR speed ≤ 167 rpm

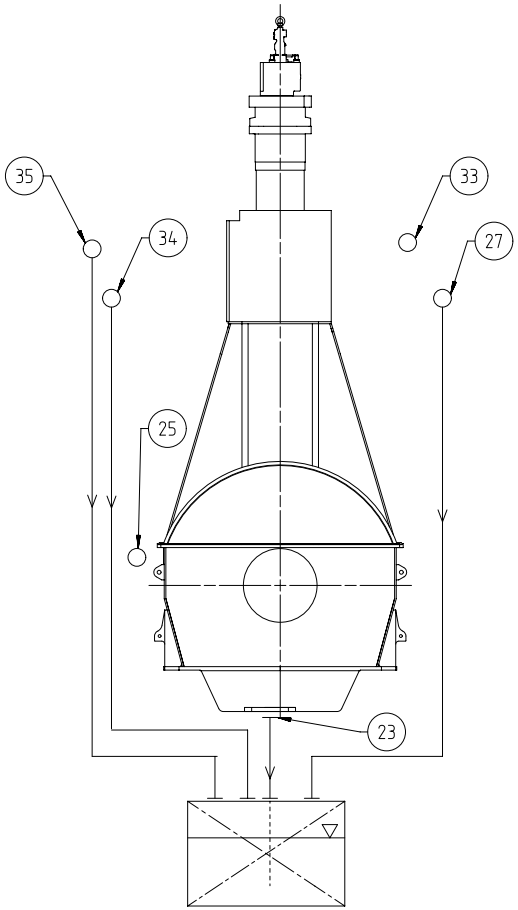

SPECIFICATION which must be met

23	OUTLET - Lubricating oil from bedplate - Oil return via vertical oil drain to lubricating oil drain tank: Vertical oil drain position must be within the permissible range as specified on the LO drain tank drawing. Final position to be informed by the shipyard to the engine manufacturer.
25	INLET - Lubricating oil - Lubricating oil temperature: - Controller set-point: 45 °C (controller type: PI) - Steady state condition: 45 ± 2 °C - Transient condition: 45 ± 4 °C - Lubricating oil pressure: 3.8 - 5.0 bar *) *) A pressure control device (e.g. a bypass line with a pressure regulating valve) or equipment for pump flow adjustment (e.g. a frequency converter to adjust the pump speed) is needed. - Lubricating oil volume flow: according to GTD - LO amount on engine side: mentioned in table 1 on page 2 - Lubricating oil cleanliness: - Full flow filtered by a 35 micron filter (absolute, sphere passing mesh) automatic self-cleaning filter - Bypass flow of the automatic self-cleaning filter (only active during maintenance of the automatic self-cleaning filter) filtered by a 35 micron (absolute sphere passing mesh) filter. - Offline cleaning of the lubricating oil in the drain tank by self-cleaning centrifugal separators
27	OUTLET - Turbocharger lubricating oil - Oil return to lubricating oil drain tank - Oil return pipe must not be connected to other drain pipes. - Oil outlet must be above the max. oil level in the tank or as an alternative a drain pipe with venting holes above the max. oil level needs to be installed.
33 E	INLET - Cylinder lubricating oil - Cylinder lubricating oil temperature: 40^{+10}_{-5} °C. - Cylinder lubricating oil static pressure: min. 0.32 bar
34	OUTLET- Servo system oil return (engine driving end) - Free flow by gravity to lubricating oil drain tank
35	OUTLET- Servo system oil return (engine free end) - Free flow by gravity to lubricating oil drain tank

Prod. X35-B

Change History

Rev.	Creator	Approver	Approval Date	Change ID	Change Synopsis	Approved	Activity Code	E	C
E	dki021	mhu019	28.09.2022	CNAA002532	Drawing Updated			4	3
D	sde101	mhu019	07.07.2022	CNAA002160	Drawing Updated			4	3
C	dki021	mhu019	08.09.2020	EAAD091530	Legacy information. See corresponding ChangeNotice			4	-
-	dki021	bha009	29.01.2016		-			-	-

WIN GD Winterthur Gas & Diesel

LUBRICATING OIL SYSTEM

Dimension

Scale - NX | Units [mm] [kg] | Basic Material | Net Weight 0.000

Main Design | Design Group 9722 | Q-Code XXXXX | Standard WDS

Qty per A2 | Item ID PAAD218389 | Drawing Page/s 1/3

SURFACE PROTECTION SEE GROUP 0344
TOLERANCING PRINCIPLE ISO8015
GENERAL TOLERANCES ACCORDING TO ISO2768-mK

Copyright Winterthur Gas & Diesel Ltd. All rights reserved. By taking possession of the drawing the recipient recognizes and honours these rights. Neither the whole nor any part of this drawing may be used in any way for construction, fabrication, marketing or any other purpose nor copied in any way nor made accessible to third parties without the previous written consent of Winterthur Gas & Diesel Ltd.

SYSTEM PROPOSAL
System oil and cylinder LO supply

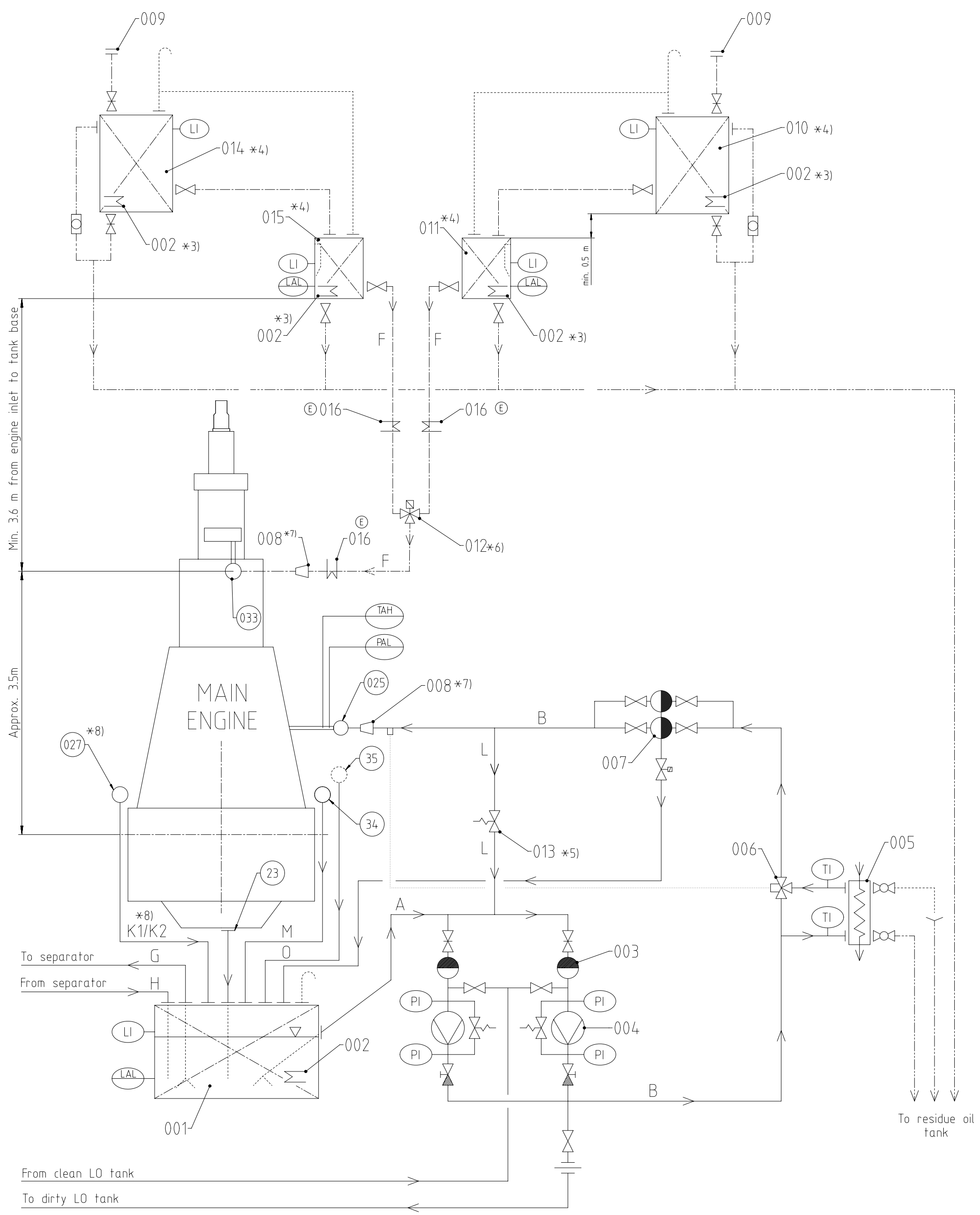

Pos.	ENGINE CONNECTIONS *2)
23	OUTLET - Lubrication oil from bedplate
25	INLET - Lubricating oil
27	OUTLET - Turbocharger lubricating oil *8) *13) *14)
33	INLET - Cylinder lubricating oil
34	OUTLET - Servo system oil return (engine driving end)
35	OUTLET - Servo system oil return (engine free end)

(E)

Number of cylinders				5	6	7	8
X35-B R1 rated	power	(kW)		4350	5220	6090	6960
	speed	(rpm)		167			
Proposal for dimensioning *10)							
LO drain tank	capacity	(m^3)		For capacities refer to drawing "LO drain tank-Filling Guideline"			
Main LO pump	capacity	(m^3/h)		refer to GTD			
Cyl. LO storage tank	capacity	(m^3)		Based on a feed rate of 1 g/kWh (pulse)			
Cyl. LO service tank *15)	capacity	(m^3)		0.3	0.4	0.5	0.5
Nominal pipe diameter	A	DN		200	200	200	200
	B	DN		150	150	200	200
	F	DN		40	40	40	40
	G	The pipe diameters for the LO separator are sized according to the effective throughput capacity of the separator and according to the separator manufacturer's recommendations.					
	H						
	K1	DN		65	65	65	65
	K2	DN		65	65	65	65
	L	DN		50	50	65	65
	M	DN		65	65	65	65
	O	DN		65	65	65	65

Table 1: LO content on engine side

Cylinder	Volume
5	636 l
6	729 l
7	821 l
8	914 l

Pos.	SYSTEM COMPONENTS *1)
001	Lubricating oil drain tank (sump tank)
002	Heating device
003	Suction strainer *11)
004	Lubricating oil pump
005	Lubricating oil cooler
006	Autom. temperature control valve, constant temp. at engine inlet: 45 °C
007	Automatic self-cleaning filter, 35 micron, with backflushing oil treatment *12) *13)
008	Transition piece (adaptor) *7)
009	Deck connection
010	Low BN cylinder lubricating oil storage tank *4)
011	Low BN cylinder lubricating oil service tank *4)
012	Three-way valve, manually or remotely operated
013	Pressure regulating valve
014	High BN cylinder lubricating oil storage tank *4)
015	High BN cylinder lubricating oil service tank *4)
016	Electrical trace heating (E)

Remarks:

- Air vent pipes and drain valves where necessary.
- Air vent and drain pipes must be fully functional at all inclination angles of the ship at which the engine must be operational.

*1) To be delivered by external supplier and to be installed by the shipyard.

*2) Refer to "Pipe Connection Plan" for exact position and execution of the pipe connection.

*3) Optional heating coil

*4) The cylinder LO service tank with measuring device provides the possibility to supervise the cylinder LO consumption of the engine.
Alternatively, if the cylinder LO service tank is omitted so that the engine is fed directly from the cylinder LO storage tank, the height of the storage tank must match the minimum height specified for the service tank.
If additional elements are installed in the supply line to the engine (e.g. a flowmeter) this height must be increased to compensate the pressure drop.

*5) The bypass line with the pressure regulating valve can be omitted if one of the following conditions is fulfilled:
- The pump speed is adjusted according to the required pressure at engine inlet, (e.g. by a frequency controller)
- The pumps have built-in pressure regulating valves

The pump built-in safety valve is in any case mandatory and not to be used for pressure regulation (pure safety function).

*6) The three-way valve has to be fitted as close as possible to the engine inlet.
This is to reduce the volume of remaining oil in the system (with the previous BN) after the change-over.

*7) Installed as required (check with the "Pipe Connection Plan")

*8) The pipe diameter varies depending on the installed TC type. Project-specific values are provided in the relevant pipe connection plan of DG8020.
As rough guidance please observe the following values:
K1: Pipe diameter for engines equipped with ABB turbocharger
K2: Pipe diameter for engines equipped with MHI turbocharger

*10) All capacities and the given pipe diameters are valid for the mentioned engine rating, including the oil amount for integrated TC lubrication, but excluding additional required oil for applied damper and/or PTO gear and/or all other externally installed ancillaries which are fed by system oil. To make the project specific layout, under consideration of the actual required flow rates / capacities, the guideline as given within DG9730 - "Fluid velocities and flow rates, recommended values for pipework of diesel plants" has to be observed.

*11) Mesh size according to pump suppliers recommendation.

*12) If the back-flushing process is driven by compressed air and the back-flushing oil is returned to the LO drain tank the oil outlet must be above the max. oil level.
Alternatively, a drain pipe with venting holes above the max. oil level needs to be installed to avoid back-flushing air blowing into the oil. Back-flushing oil must be treated.

*13) The oil return pipe must not be connected to other drain pipes. If the oil is returned to the LO drain tank it is recommended to connect the oil outlet
- as close as possible to the separator suction pipe
- opposite to the main LO pump,i.e.
  - on tanks' forward end if the main LO pump is on tanks' aft end
  - on tanks' aft end if the main LO pump is on tanks' forward end
  - on tanks' forward or aft end if the main LO pump is in the middle of the tank.

*14) The oil outlet in the LO drain tank must be above the max. oil level or as an alternative a drain pipe with venting holes above the max. oil level needs to be installed.

*15) The proposed cylinder LO services tank capacity takes into account a filling interval of 2 days based on the above mentioned feed rate.

(E)

Bearing LO pipes
Cylinder LO pipes
Cylinder LO pipes trace heated and insulated
Transfer/dirty LO pipes
Overflow/drain pipes
Air vent pipes
Pipes on engine
Pipe connections

Change	E	dki021	mhu019	28.09.2022	CNAA002532	Drawing Updated	4 / 3
	Rev.	Creator	Approver	Approval Date	Change ID	Change Synopsis / Approved	Activity Code E C

SURFACE PROTECTION SEE GROUP 0344
TOLERANCING PRINCIPLE ISO8015
GENERAL TOLERANCES ACCORDING TO ISO2768-mK

Copyright Winterthur Gas & Diesel Ltd. All rights reserved. By taking possession of the drawing the recipient recognizes and honours these rights. Neither the whole nor any part of this drawing may be used in any way for construction, fabrication, marketing or any other purpose nor copied in any way nor made accessible to third parties without the previous written consent of Winterthur Gas & Diesel Ltd.

[mm] [kg] - NX A0 Item ID PAAD218389 Drawing Page/s 2/3

SYSTEM PROPOSAL - LO treatment system

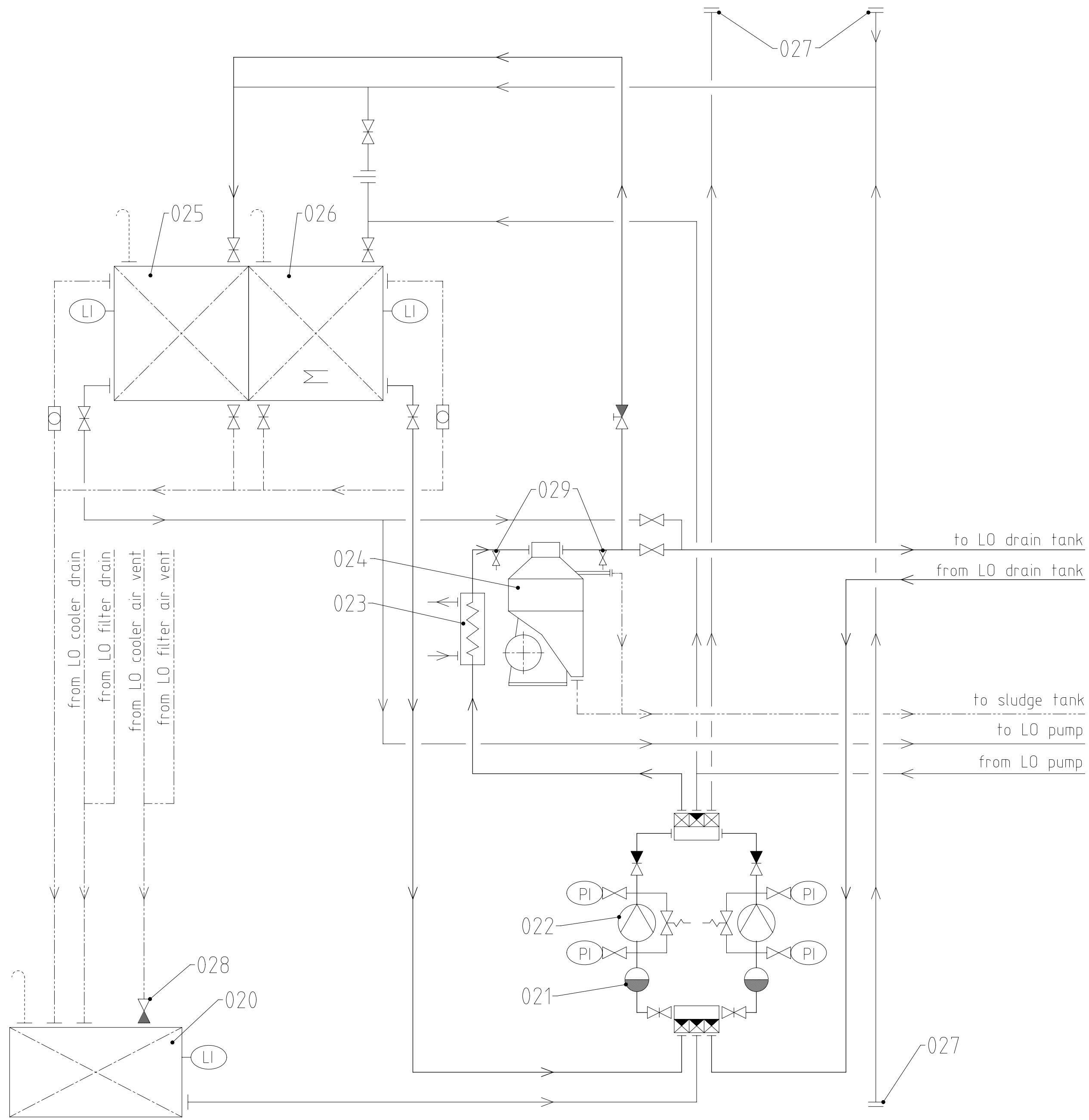

Pos.	SYSTEM COMPONENTS *1)	
020	Residue oil tank	
021	Suction stainer *2)	
022	Lubricating oil pump	one for transfer and separator service
		one for separator service
023	Lubricating oil heater with relief valve and temperature control	
024	Self-cleaning centrifugal separator	
025	Clean lubricating oil tank	
026	Dirty lubricating oil tank	
027	Deck connection	
028	Float non-return valve	
029	LO sampling cock *3)	

X35/-B			Number of cylinders			
			5	6	7	8
Clean LO tank	capacity	(m³)	equal or bigger than LO drain tank volume			
Dirty LO tank	capacity	(m³)	equal or bigger than LO drain tank volume			
LO separator *4)	capacity	(l/h)	490	590	690	790
Residue oil tank	capacity	(m³)	Depending on ship's requirements			

Remark:

- Air vents and drain valves where necessary
- Air vent and drain pipes must be fully functional at all inclination angles of the ship at which the engine must be operational (check Class rules)
- Pipe diameters to be designed according to shipyards' practice and component suppliers' recommendations

*1) To be delivered by external supplier and to be installed by the shipyard.
*2) Mesh size according to pump suppliers recommendation.
*3) Recommended position for LO sampling to check LO quality / treatment efficiency.
*4) Based on the min. recommended tank filling level (h1) as mentioned in the "Filling Guideline" drawing. If a larger tank volume is applied, LO separators capacity needs to be increased accordingly (it is recommended that the oil is circulated at least two times per day).

Legend:
- —— Main separating piping
- —— Transfer/dirty LO pipes
- –·–·– Overflow/drain pipes
- ······ Air vent pipes

Change	E	dki021	mhu019	28.09.2022	CNAA002532	Drawing Updated		4	3
	Rev.	Creator	Approver	Approval Date	Change ID	Change Synopsis Approved	Activity Code	E	C

SURFACE PROTECTION SEE GROUP 0344
TOLERANCING PRINCIPLE ISO8015
GENERAL TOLERANCES ACCORDING TO ISO2768-mK

Copyright Winterthur Gas & Diesel Ltd. All rights reserved. By taking possession of the drawing the recipient recognizes and honours these rights. Neither the whole nor any part of this drawing may be used in any way for construction, fabrication, marketing or any other purpose nor copied in any way nor made accessible to third parties without the previous written consent of Winterthur Gas & Diesel Ltd.

[mm] [kg] – NX A1 Item ID PAAD218389 Drawing Page/s 3/3

X35-B rated in speed range:
A: 118 rpm ≤ CMCR speed ≤ 136 rpm
B: 136 rpm < CMCR speed ≤ 154 rpm

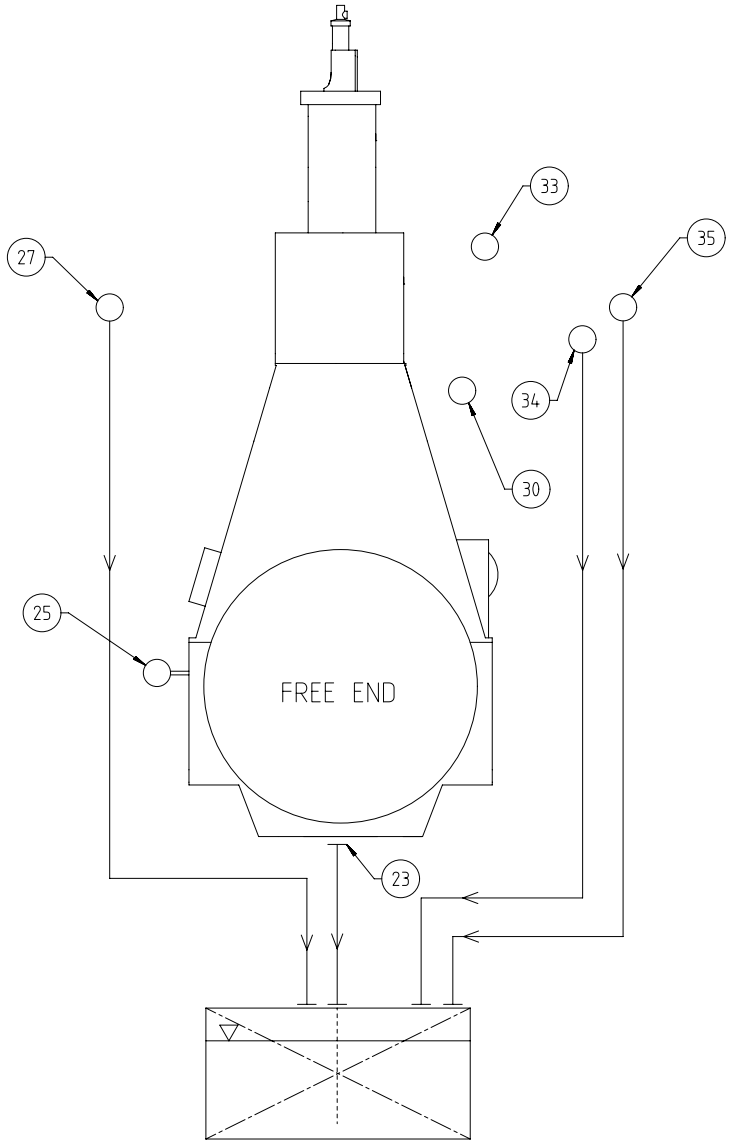

SPECIFICATION WHICH MUST BE MET

23	OUTLET - Lubricating oil from bedplate vertical oil drain - Drain to lubricating oil drain tank: Drain pipe position must within the permissible range as specified on the LO drain tank drawing Final position to be informed by the shipyard to the engine manufacturer.
25	INLET - Lubricating oil - Lubricating oil temperature: - Controller set-point: 45 °C (controller type: PI) - Steady state condition: 45 ± 2 °C - Transient condition: 45 ± 4 °C - Lubricating oil pressure: 3.8-5.0 bar *) *) An active pressure control device is needed, which could be either a bypass via pressure control valve or frequency controlled pumps, working with a closed loop control circlc. - Lubricating oil volume flow: according to GTD - Lubricating oil cleanliness: - Full flow filtered by 35 micron filter (absolute sphere passing mesh). - Bypass cleaning of lubricating oil in drain tank by self-cleaning centrifugal separator.
27	OUTLET - Lubricating oil turbocharger - Oil return to lubricating oil drain tank - Oil return pipe must not be connected to other drain pipes. - Oil outlet must be above the max. oil level in the tank or as an alternative a drain pipe with venting holes above the max. oil level needs to be installed.
30	INLET - Crosshead Lubricating oil - Lubricating oil temperature: - Controller set-point: 45 °C (controller type: PI) - Steady state condition: 45 ± 2 °C - Transient condition: 45 ± 4 °C - Lubricating oil pressure: in speed range A: 10-13 bar in speed range B: 7-9 bar - Lubricating oil volume flow: according to GTD - Lubricating oil cleanliness: - Full flow filtered by 35 micron filter (absolute sphere passing mesh). - Bypass cleaning of lubricating oil in drain tank by self-cleaning centrifugal separator.
33 G	INLET - Cylinder lubricating oil - Cylinder lubricating oil temperature: 40^{+10}_{-5} °C. - Cylinder lubricating oil static pressure: min. 0.32 bar
34	OUTLET- Oil drain servo system, oil return from engine driving end - Free flow by gravity to lubricating oil drain tank.
35	OUTLET- Oil drain servo system, oil return from engine free end - Free flow by gravity to lubricating oil drain tank.

Prod. X35-B

Change History

Rev.	Creator	Approver	Approval Date	Change ID	Change Synopsis	Approved	Activity Code	E	C
G	dki021	mhu019	28.09.2022	CNAA002532	Drawing Updated			4	3
F	sde101	mhu019	07.07.2022	CNAA002160	Drawing Updated			4	3
E	dki021	mhu019	26.09.2019	EAAD090871	Legacy information. See corresponding ChangeNotice			4	-
-	wwa008	bha009	13.05.2015		-			-	-

WIN GD Winterthur Gas & Diesel

LUBRICATING OIL SYSTEM
WITH HP CROSSHEAD PUMPS

Dimension

Scale - NX | Units [mm] [kg] | Basic Material | Net Weight 0.000

SURFACE PROTECTION SEE GROUP 0344
TOLERANCING PRINCIPLE ISO8015
GENERAL TOLERANCES ACCORDING TO ISO2768-mK

Copyright Winterthur Gas & Diesel Ltd. All rights reserved. By taking possession of the drawing the recipient recognizes and honours these rights. Neither the whole nor any part of this drawing may be used in any way for construction, fabrication, marketing or any other purpose nor copied in any way nor made accessible to third parties without the previous written consent of Winterthur Gas & Diesel Ltd.

Main Design	Design Group	9722	Q-Code XXXXX	Standard	WDS
Qty per	A2	Item ID	PAAD181323	Drawing Page/s	1/3

SYSTEM PROPOSAL
System oil and cylinder LO supply

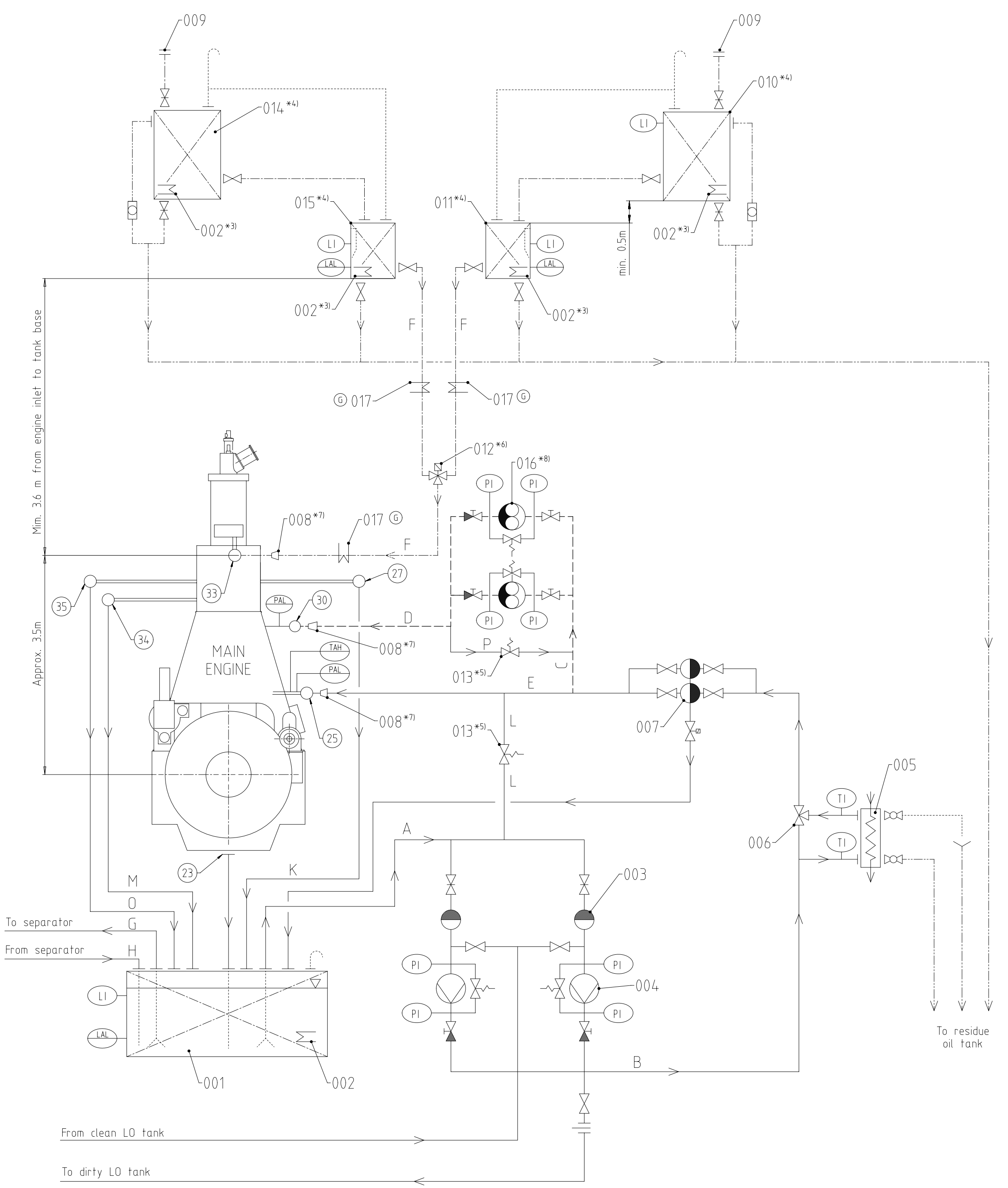

Line	Meaning
———	Bearing LO pipes
—·—·—	Cylinder LO pipes
–M–	Cylinder LO pipes trace heated and insulated
═══	Pipes on engine
———	Transfer/dirty LO pipes
—··—··—	Overflow/drain pipes
········	Air vent pipes
— — —	Crosshead LO pipes
○	Pipe connections

Pos.	ENGINE CONNECTIONS *2)
23	OUTLET - Lubrication oil from bedplate vertical oil drain
25	INLET - Lubricating oil
27	OUTLET - Lubricating oil turbocharger *13) *14)
30	INLET - Crosshead lubricating oil
33	INLET - Cylinder lubricating oil
34	OUTLET - Oil drain servo system, oil return from engine driving end
35	OUTLET - Oil drain servo system, oil return from engine free end

(G)

Number of cylinders			5	6	7	8
Main Engine X35-B rated with CMCR speed 154 rpm	power	(kW)	4012	4814	5616	6419
	speed	(rpm)	154			
Main Engine X35-B rated with CMCR speed 136 rpm	power	(kW)	3543	4252	4961	5669
	speed	(rpm)	136			
Proposal for dimensioning *10)						
LO drain tank	capacity	(m^3)	For capacities refer to drawing "LO drain tank-Filling Guideline"			
Main LO pump	capacity	(m^3/h)	refer to GTD			
Cyl. LO storage tank	capacity	(m^3)	Based on a feed rate of 1g/kWh (pulse)			
Cyl. LO service tank *15)	capacity	(m^3)	0.3	0.4	0.4	0.5
Crosshead LO pump	capacity	(m^3/h)	refer to GTD			
Nominal pipe diameter	A	DN	150	150	200	200
	B	DN	125	150	150	150
	C DN	154 rpm	50	50	50	65
	C DN	136 rpm	50	50	50	65
	D DN	154 rpm	50	50	50	65
	D DN	136 rpm	50	50	50	50
	E	DN	125	125	150	150
	F	DN	40	40	40	40
	G, H	The pipe diameters for the LO separator are sized according to the effective throughput capacity of the separator and according to the separator manufacturer's recommendations.				
	K	DN	65	65	65	65
	L	DN	65	65	65	80
	M	DN	65	65	65	65
	O	DN	65	65	65	65
	P	DN	32	32	32	32

Pos.	SYSTEM COMPONENTS *1)
001	Lubricating oil drain tank (sump tank)
002	Heating device
003	Suction strainer *11)
004	Lubricating oil pump
005	Lubricating oil cooler
006	Autom. temperature control valve, constant temp. at engine inlet: 45°C
007	Automatic self-cleaning filter, 35 micron, with backflushing oil treatment *12) *13)
008	Transition piece (adaptor) *7)
009	Deck connection
010	Low BN cylinder lubricating oil storage tank *4)
011	Low BN cylinder lubricating oil service tank *4)
012	Three-way valve, manually or remotely operated *6)
013	Pressure regulating valve
014	High BN cylinder lubricating oil storage tank *4)
015	High BN cylinder lubricating oil service tank *4)
016	Crosshead lubricating oil pump *8)
017	Electrical trace heating (G)

Remarks:

- Air vent pipes and drain valves where necessary.
- Air vent and drain pipes must be fully functional at all inclination angles of the ship at which the engine must be operational.

*1) To be delivered by external supplier and to be installed by the shipyard.

*2) Refer to "Pipe Connection Plan" for exact position and execution of the pipe connection.

*3) Optional heating coil

*4) The cylinder LO service tank with metering device provides the possibility to supervise the cylinder LO consumption of the engine. Alternatively, if the cylinder LO service tank is omitted, i.e. the engine is fed directly from the cylinder LO storage tank, the storage tank has to be located at the same minimum installation height as specified for the service tank, respectively a certain level higher if additional elements are installed in the supply line to the engine (e.g. a flowmeter) to compensate the pressure drop created.

*5) The bypass line with the pressure regulating valve can be omitted if one of the following conditions is fulfilled:
- The pump speed is adjusted according to the required pressure at engine inlet, e.g. by a frequency controller
- The pumps have built-in pressure regulating valves

The pump built-in safety valve is in any case mandatory and not to be used for pressure regulation (pure safety function).

*6) Three-way valve has to be fitted as close as possible to the engine inlet. The reason is that the oil volume after the change-over valve has to be kept small in order to allow a swift change-over between the cylinder oils of different BN.

*7) Installed as required (check with the "Pipe Connection Plan")

*8) The LO pumps (pos. 004) and the crosshead LO pumps (pos. 016) are to be interlocked so that the crosshead LO pumps never can run alone.

*10) All capacities and the given pipe diameters are valid for the mentioned engine rating, including the oil amount for integrated TC lubrication, but excluding additional required oil for applied damper and/or PTO gear and/or all other externally installed ancillaries which are fed by system oil. To make the project specific layout, under consideration of the actual required flow rates / capacities, the guideline as given within DG9730 - "Fluid velocities and flow rates, recommended values for pipework of diesel plants" has to be observed.

*11) Mesh size according to pump suppliers recommendation.

*12) If the back-flushing process is driven by compressed air and the back-flushing oil is returned to the LO drain tank the oil outlet must be above the max. oil level or as an alternative a drain pipe with venting holes above the max. oil level needs to be installed to avoid back-flushing air blowing into the oil. Back-flushing oil must be treated.

*13) The oil return pipe must not be connected to other drain pipes.
If the oil is returned to the LO drain tank it is recommended to connect the oil outlet
- as close as possible to the separator suction pipe
- opposite to the main LO pump, i.e.
  - on tanks' forward end if the main LO pump is on tanks' aft end
  - on tanks' aft end if the main LO pump is on tanks' forward end
  - on tanks' forward or aft end if the main LO pump is in the middle of the tank.

*14) The oil outlet in the LO drain tank must be above the max. oil level or as an alternative a drain pipe with venting holes above the max. oil level needs to be installed.

*15) The proposed cylinder LO services tank capacity takes into account a filling interval of 2 days based on the above mentioned feed rate.

(G)

Change	G	dki021	mhu019	28.09.2022	CNAA002532	Drawing Updated	4	3
	Rev.	Creator	Approver	Approval Date	Change ID	Change Synopsis / Approved / Activity Code	E	C

SURFACE PROTECTION SEE GROUP 0344
TOLERANCING PRINCIPLE ISO8015
GENERAL TOLERANCES ACCORDING TO ISO2768-mK

Copyright Winterthur Gas & Diesel Ltd. All rights reserved. By taking possession of the drawing the recipient recognizes and honours these rights. Neither the whole nor any part of this drawing may be used in any way for construction, fabrication, marketing or any other purpose nor copied in any way nor made accessible to third parties without the previous written consent of Winterthur Gas & Diesel Ltd.

[mm] [kg] | - | NX | A0 | Item ID PAAD181323 | Drawing Page/s 2/3

SYSTEM PROPOSAL - LO treatment system

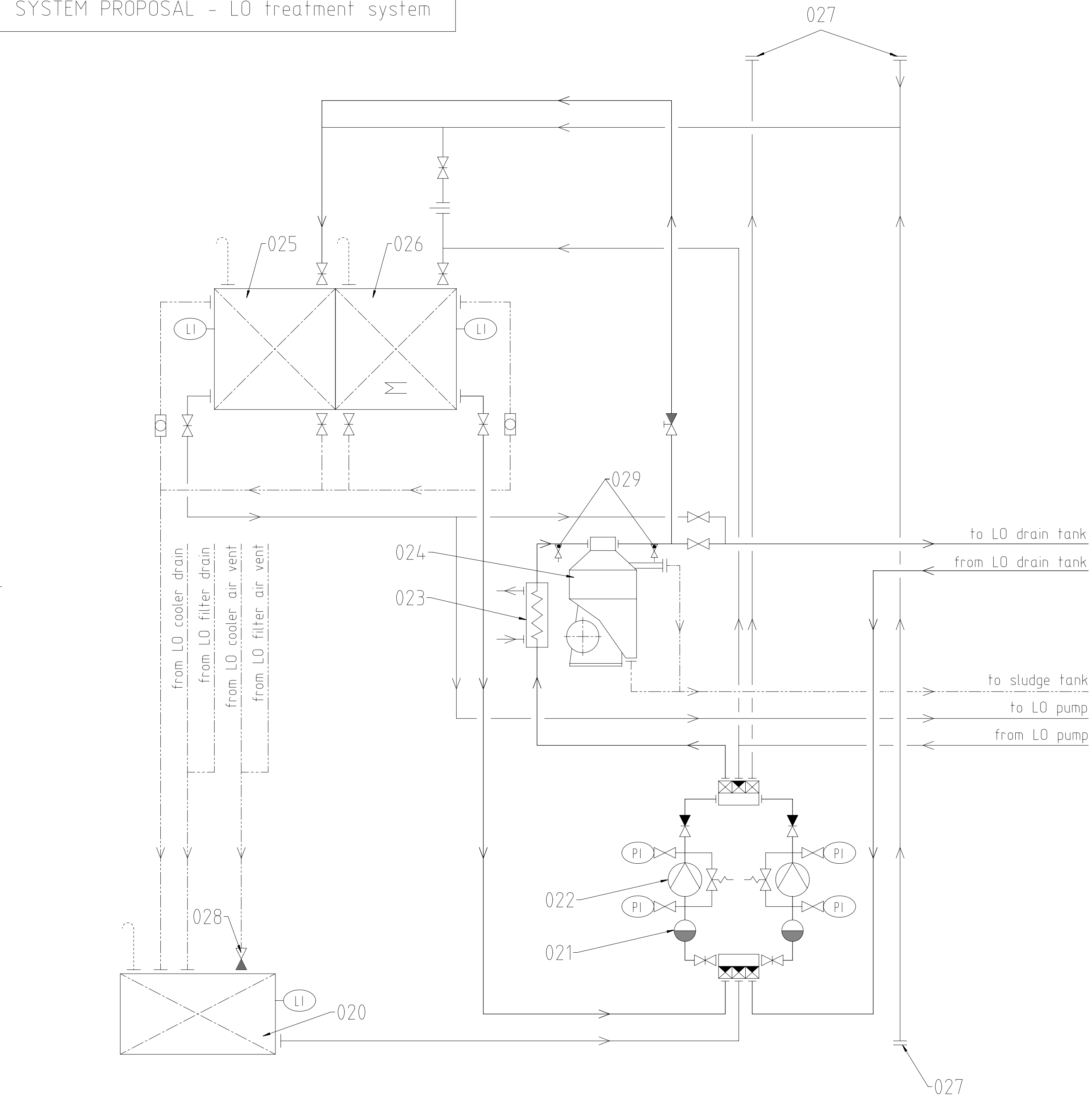

Pos.	SYSTEM COMPONENTS *1)	
020	Residue oil tank	
021	Suction strainer *2)	
022	Lubricating oil pump	one for transfer and separator service
		one for separator service
023	Lubricating oil heater with relief valve and temperature control	
024	Self-cleaning centrifugal separator	
025	Clean lubricating oil tank	
026	Dirty lubricating oil tank	
027	Deck connection	
028	Float non-return valve	
029	LO sampaling cock *3)	

X35-B			Number of cylinders			
			5	6	7	8
Clean LO tank	capacity	(m^3)	equal or bigger than LO drain tank volume			
Dirty LO tank	capacity	(m^3)	equal or bigger than LO drain tank volume			
LO separator	capacity	(l/h)	490	590	690	790
Residue oil tank	capacity	(m^3)	Depending on ship's requirements			

Remarks:

- Air vents and drain valves where necessary.
- Air vent and drain pipes must be fully functional at all inclination angles of the ship at which the engine must be operational (check Class rules).
- Pipe diameters to be designed according to shipyards' practice and component suppliers' recommendations.

*1) To be delivered by external supplier and to be installed by the shipyard.

*2) Mesh size according to pump suppliers recommendation.

*3) Recommended position for LO sampling to check LO quality / treatment efficiency.

Main separating piping
Transfer/dirty LO pipes
Overflow/drain pipes
Air vent pipes

Change	G	dki021	mhu019	28.09.2022	CNAA002532	Drawing Updated	4	3
	Rev.	Creator	Approver	Approval Date	Change ID	Change Synopsis / Approved / Activity Code	E	C

SURFACE PROTECTION SEE GROUP 0344
TOLERANCING PRINCIPLE ISO8015
GENERAL TOLERANCES ACCORDING TO ISO2768-mK

Copyright Winterthur Gas & Diesel Ltd. All rights reserved. By taking possession of the drawing the recipient recognizes and honours these rights. Neither the whole nor any part of this drawing may be used in any way for construction, fabrication, marketing or any other purpose nor copied in any way nor made accessible to third parties without the previous written consent of Winterthur Gas & Diesel Ltd.

[mm] [kg] – NX A1 Item ID PAAD181323 Drawing Page/s 3/3

TANK PROPOSAL

5X35-B

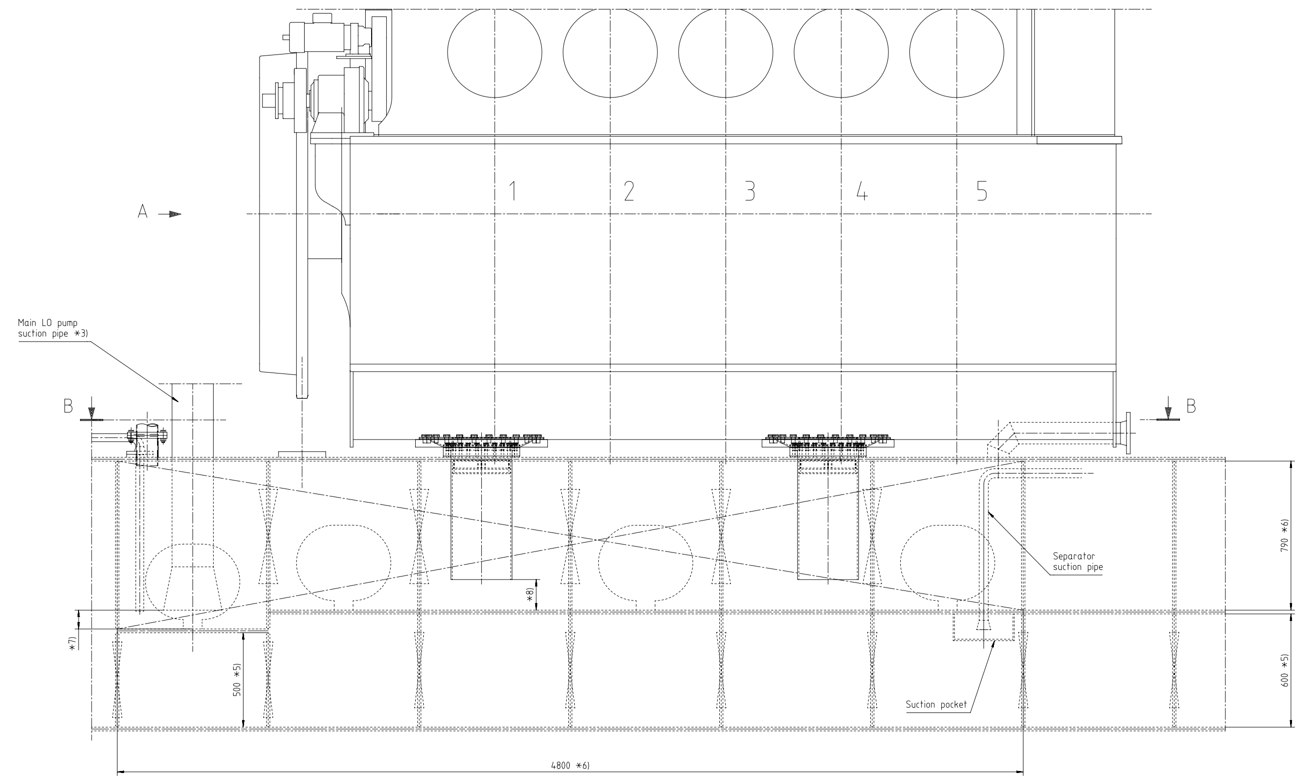

A (DRIVING END)

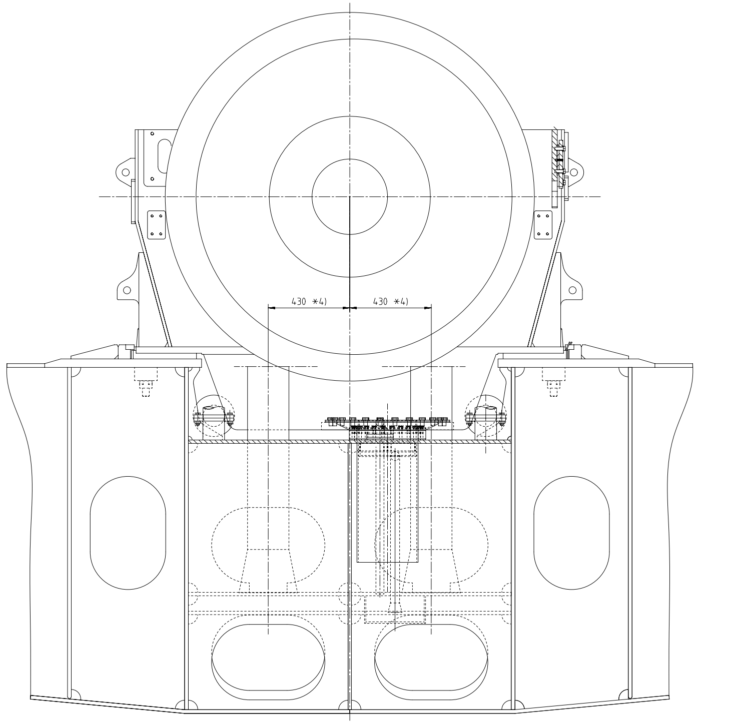

B-B

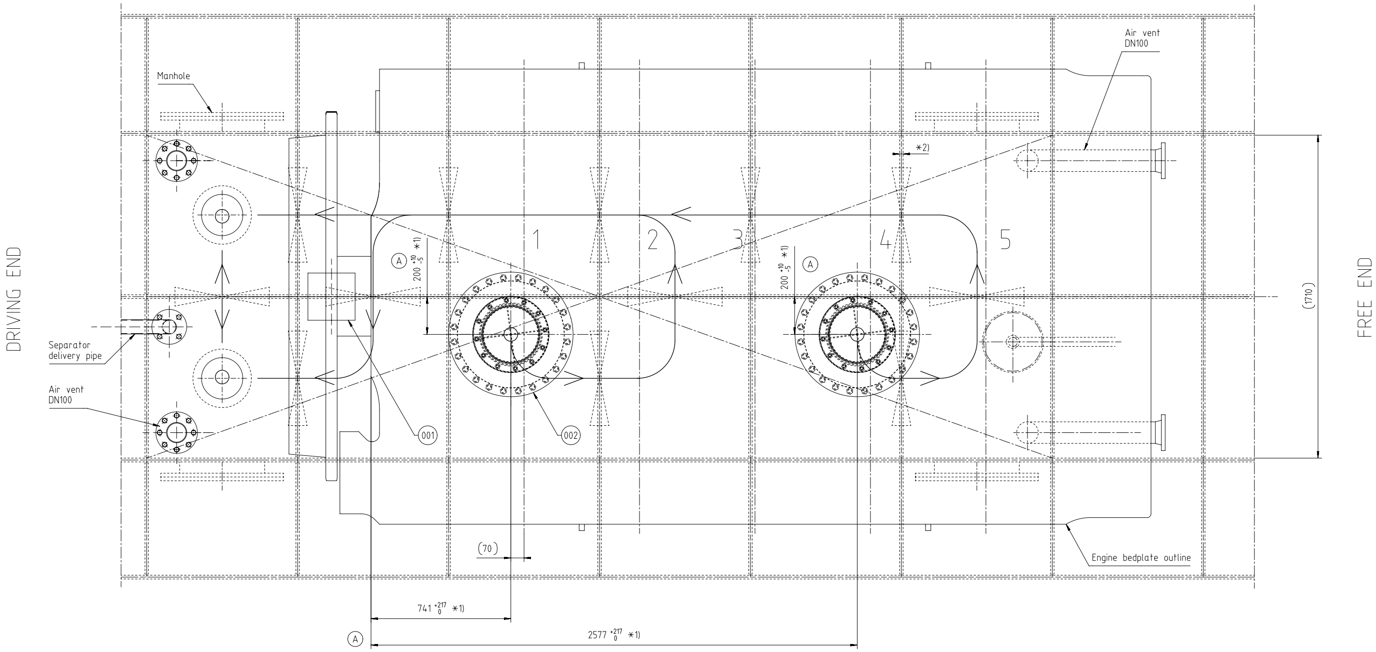

(A) REMARKS:

*1) Drains must be arranged by the shipyard in accordance with the shiphull structure and within the specified tolerance range. As soon as the final positions are determined the engine manufacturer must be informed so that the bedplate (oil pan) holes can be machined in compliance with the engine builder drawing "BEDPLATE OIL DRAIN" (DG1110).

*2) Recommendation regarding plate thickness is given in the Marine Installation Drawing Set (MIDS) "ENGINE / SEATING FOUNDATION" (foundation arrangement drawing, DG9710).

*3) Recommendation regarding the pipe size is given in the system proposal as provided in the MIDS "LUBRICATING OIL SYSTEM" (LO system drawing, DG9722).

*4) Final position depends on the size of the flywheel casing and required space for the main LO pump.

*5) Final height must be in accordance with the rules of the relevant classification society.

*6 Proposal, final tank dimensions are to be determined by the shipyard in accordance with the shiphull structure, minimum required filling / circulation volume, pump suction requirements and rules of the relevant classification society. Requirements / design criteria for the tank layout are provided in the MIDS "LUBRICATING OIL DRAIN TANK - Filling Guidelines" (DG9722).

*7) Distance according to pump makers specification.

*8) The drain pipe outlet must be below the min. LO level (LO low level alarm height) though a gap of min. half of the drain pipe diameter (min. 1/2*DN) to the drain tank bottom has to be maintained.

QTY	SEQ NO	Material ID	Material Name / Dimension, Occ	Standard or Drawing	Basic Material / Material Standard	Weight GR./NET
2	002	PAAD032037	VERTICAL OIL DRAIN	DAAD013785		59,3
1	001	107.246.799.200	PLATE	107.246.799		15,0

Free space for lic. — Q-Code: XXXXX — Standard: ISO; JIS — Main Drw.

Modif.	Number	Drawn date
(A)	EAAD090135	12.12.2018

WIN GD Winterthur Gas & Diesel

Product: 5X35-B

LUBRICATING OIL DRAIN TANK
WITH VERTICAL DRAINS

Units mm kg	NX	Basic Material	Net Weight 134
Made 22.11.2011 wwr001 W.Wroblewski	Scale 1:10	Size A0 / Page 1/1	Material ID PAAD066760
Chkd 16.12.2011 sfe006 Feuerstein	Design Group 9722	Drawing ID DAAD022501	Rev. A
Appd 16.12.2011 dst009 Strödecke			

SURFACE PROTECTION SEE GROUP 0344
TOLERANCING PRINCIPLE ISO8015
GENERAL TOLERANCES ACCORDING TO ISO2768-mK

Approved
DID - DIMENSIONAL DRAWING - Confidential

Copyright Winterthur Gas & Diesel Ltd. All rights reserved. By taking possession of the drawing the recipient recognizes and honours these rights. Neither the whole nor any part of this drawing may be used in any way for construction, fabrication, marketing or any other purpose nor copied in any way nor made accessible to third parties without the previous written consent of Winterthur Gas & Diesel Ltd.

TANK PROPOSAL

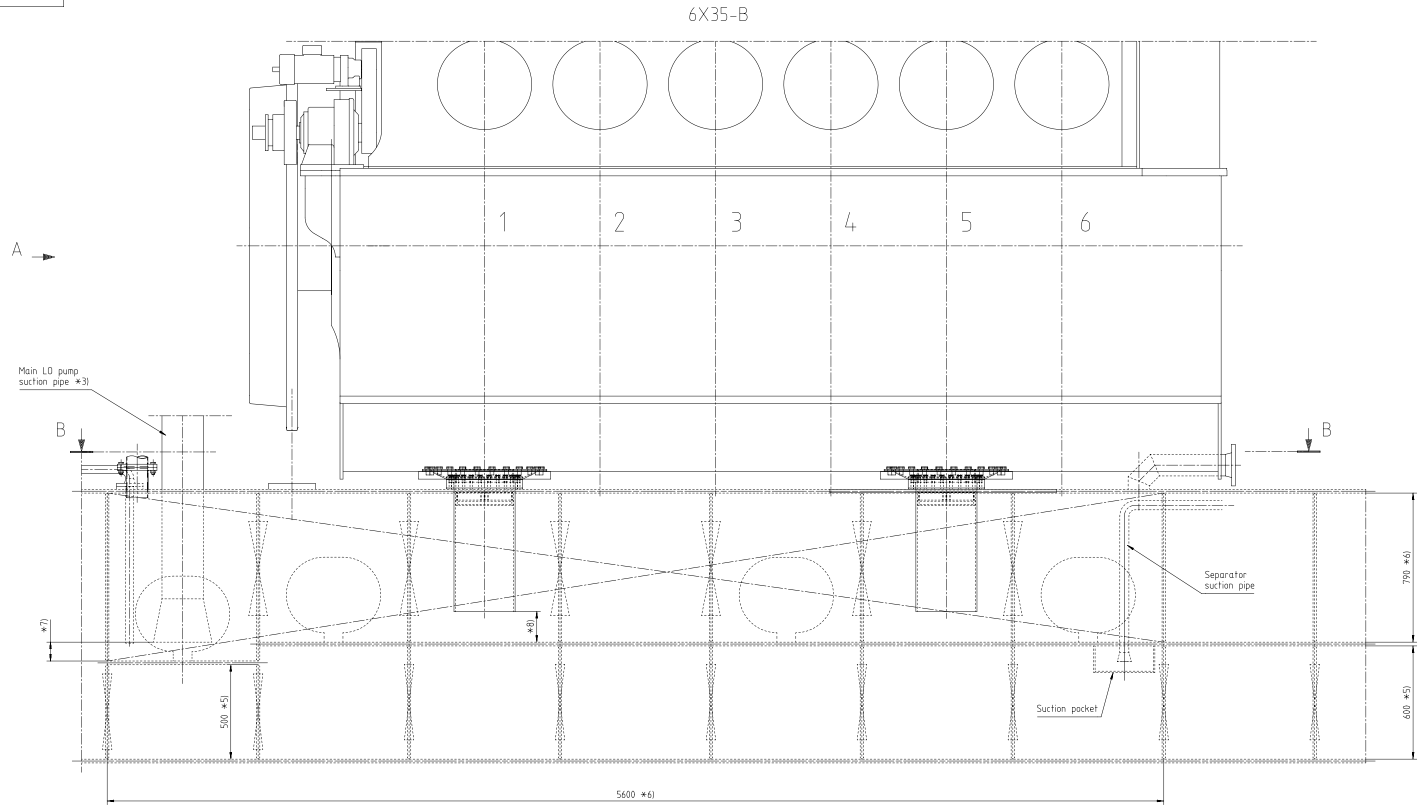

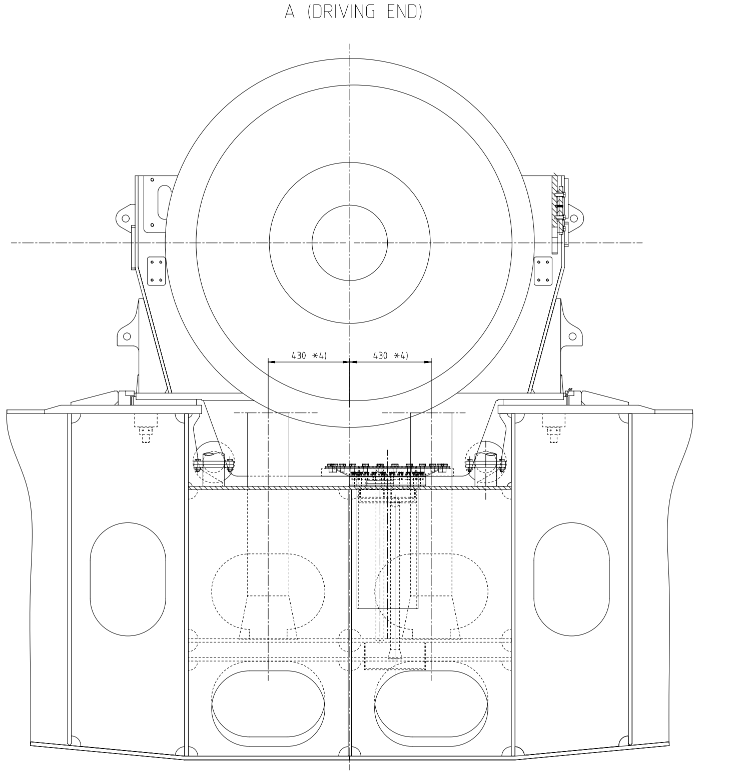

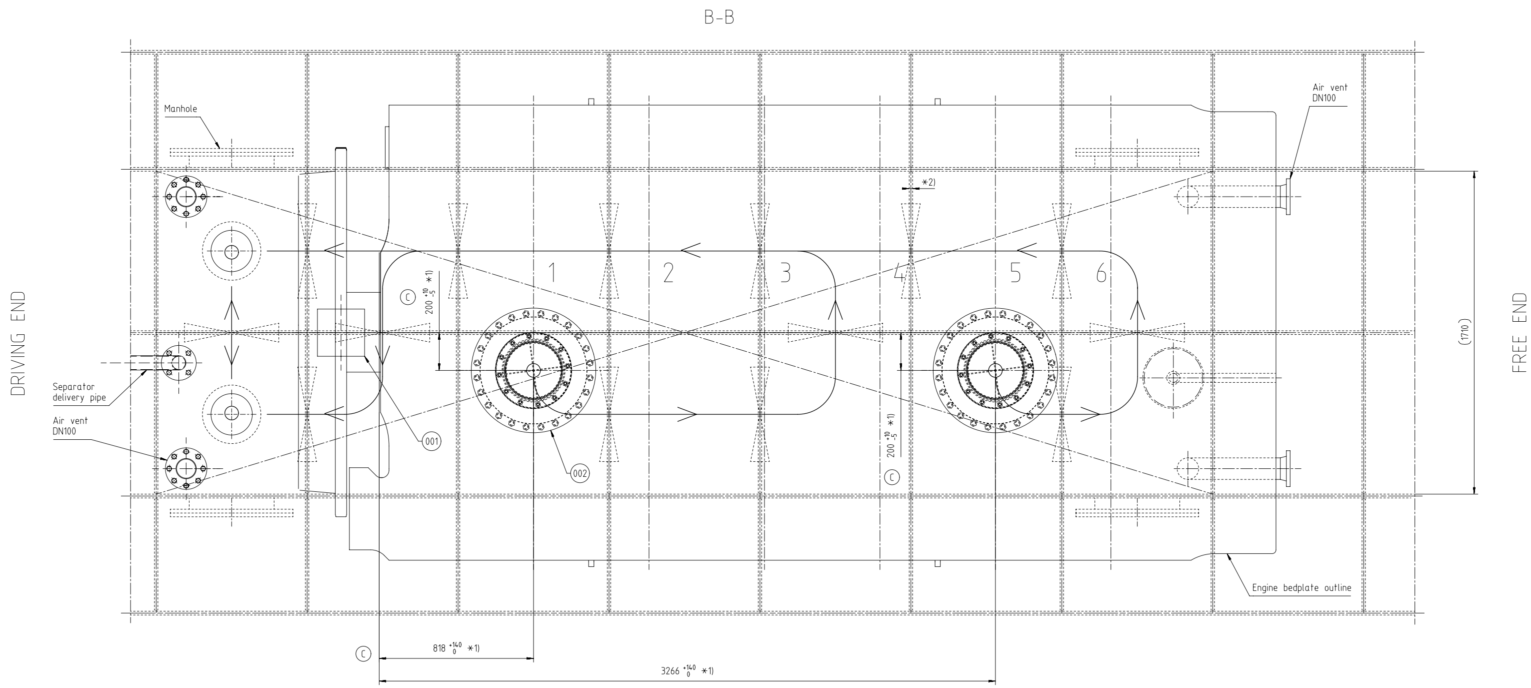

REMARKS:

*1) Drains must be arranged by the shipyard in accordance with the shiphull structure and within the specified tolerance range. As soon as the final positions are determined the engine manufacturer must be informed so that the bedplate (oil pan) holes can be machined in compliance with the engine builder drawing "BEDPLATE OIL DRAIN" (DG1110).

*2) Recommendation regarding plate thickness is given in the Marine Installation Drawing Set (MIDS) "ENGINE / SEATING FOUNDATION" (foundation arrangement drawing, DG9710).

*3) Recommendation regarding the pipe size is given in the system proposal as provided in the MIDS "LUBRICATING OIL SYSTEM" (LO system drawing, DG9722).

*4) Final position depends on the size of the flywheel casing and required space for the main LO pump.

*5) Final height must be in accordance with the rules of the relevant classification society.

*6 Proposal, final tank dimensions are to be determined by the shipyard in accordance with the shiphull structure, minimum required filling / circulation volume, pump suction requirements and rules of the relevant classification society. Requirements / design criteria for the tank layout are provided in the MIDS "LUBRICATING OIL DRAIN TANK - Filling Guidelines" (DG9722).

*7) Distance according to pump maker's specification.

*8) The drain pipe outlet must be below the min. LO level (LO low level alarm height) though a gap of min. half of the drain pipe diameter (min. 1/2*DN) to the drain tank bottom has to be maintained.

QTY	SEQ NO	Material ID	Material Name / Dimension, Occ	Standard or Drawing	Basic Material / Material Standard	Weight GR./NET
2	002	PAAD032037	VERTICAL OIL DRAIN	DAAD013785		59,3
1	001	107.246.799.200	PLATE	107.246.799		15,0

Q-Code: XXXXX
Standard: ISO; JIS

Modif.	Number	Drawn date
A	EAAD082358	11.02.2011
B	EAAD083145	25.01.2012
C	EAAD090135	13.12.2018

WIN GD Winterthur Gas & Diesel

Product: 6X35-B

LUBRICATING OIL DRAIN TANK
WITH VERTICAL DRAINS

Units mm kg | NX | Basic Material | Net Weight 134

SURFACE PROTECTION SEE GROUP 0344
TOLERANCING PRINCIPLE ISO8015
GENERAL TOLERANCES ACCORDING TO ISO2768-mK

Made	17.01.2011	wwr001 W.Wroblewski
Chkd	19.01.2011	mhu019 Hug
Appd	19.01.2011	dst009 Strödecke

Scale 1:10 | Size A0 | Page 1/1 | Material ID PAAD030490
Design Group 9722 | Drawing ID DAAD012918 | Rev. C

DID - DIMENSIONAL DRAWING - Confidential

Copyright Winterthur Gas & Diesel Ltd. All rights reserved. By taking possession of the drawing the recipient recognizes and honours these rights. Neither the whole nor any part of this drawing may be used in any way for construction, fabrication, marketing or any other purpose nor copied in any way nor made accessible to third parties without the previous written consent of Winterthur Gas & Diesel Ltd.

TANK PROPOSAL

7X35-B

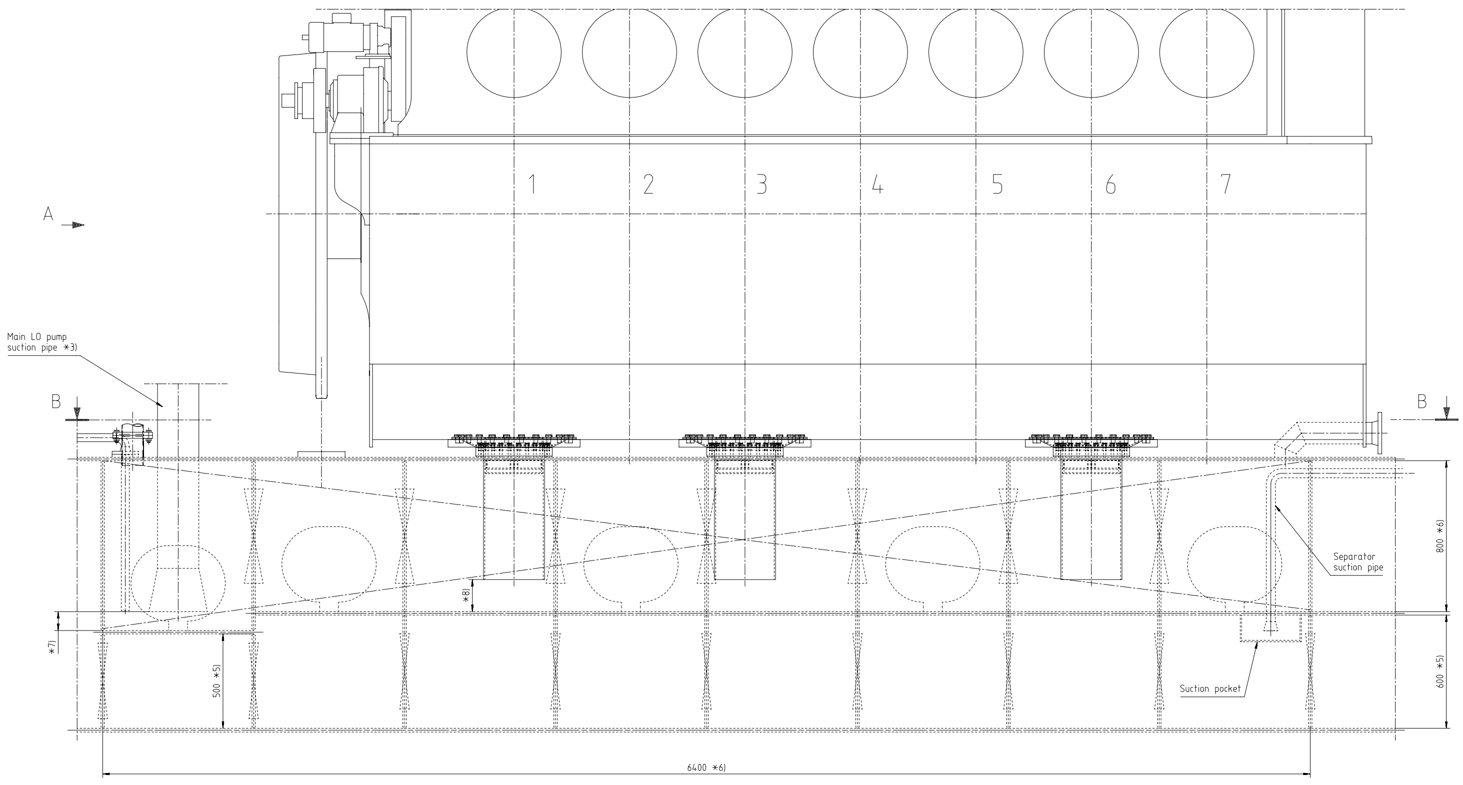

A (DRIVING END)

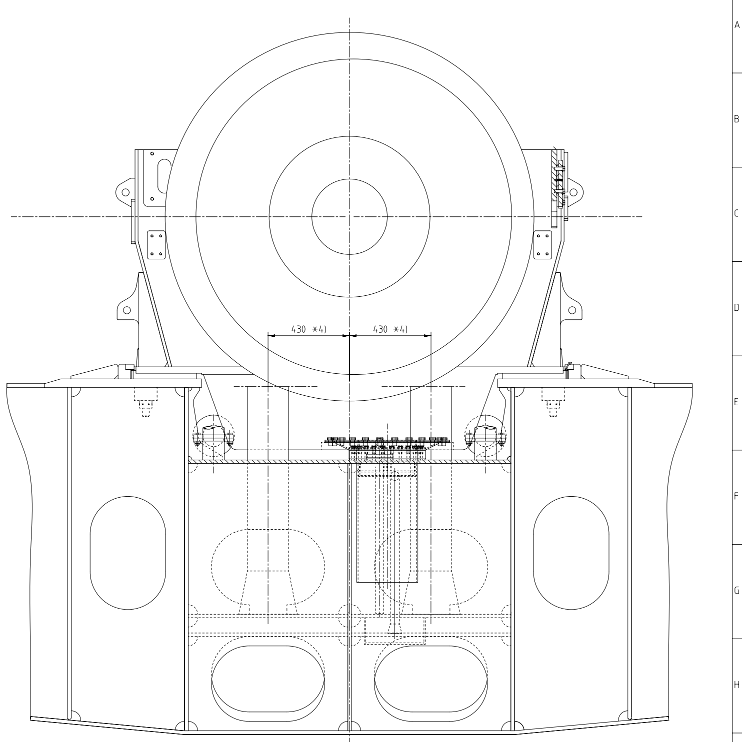

B-B

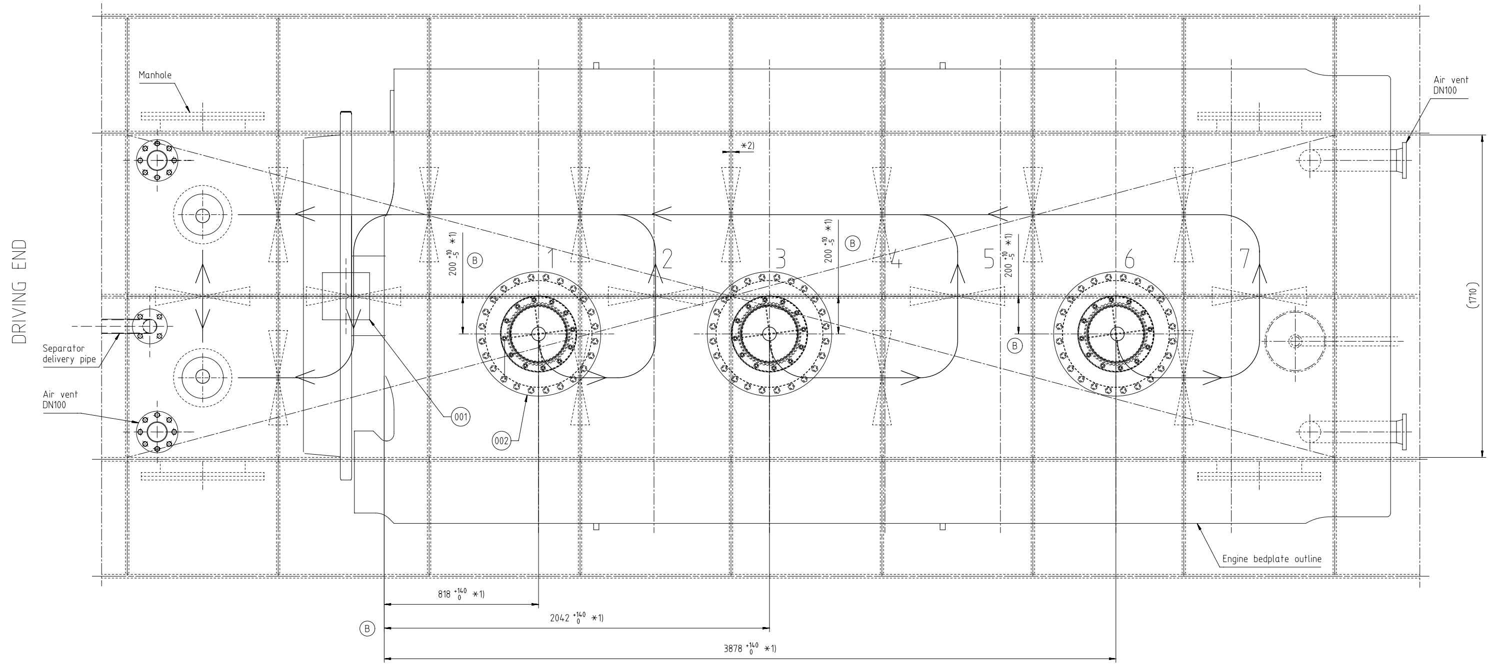

(B) REMARKS:

*1) Drains must be arranged by the shipyard in accordance with the shiphull structure and within the specified tolerance range. As soon as the final positions are determined the engine manufacturer must be informed so that the bedplate (oil pan) holes can be machined in compliance with the engine builder drawing "BEDPLATE OIL DRAIN" (DG1110).

*2) Recommendation regarding plate thickness is given in the Marine Installation Drawing Set (MIDS) "ENGINE / SEATING FOUNDATION" (foundation arrangement drawing, DG9710).

*3) Recommendation regarding the pipe size is given in the system proposal as provided in the MIDS "LUBRICATING OIL SYSTEM" (LO system drawing, DG9722).

*4) Final position depends on the size of the flywheel casing and required space for the main LO pump.

*5) Final height must be in accordance with the rules of the relevant classification society.

*6 Proposal, final tank dimensions are to be determined by the shipyard in accordance with the shiphull structure, minimum required filling / circulation volume, pump suction requirements and rules of the relevant classification society. Requirements / design criteria for the tank layout are provided in the MIDS "LUBRICATING OIL DRAIN TANK - Filling Guidelines" (DG9722).

*7) Distance according to pump makers specification.

*8) The drain pipe outlet must be below the min. LO level (LO low level alarm height) though a gap of min. half of the drain pipe diameter (min. 1/2*DN) to the drain tank bottom has to be maintained.

QTY	SEQ NO	Material ID	Material Name / Dimension, Occ	Standard or Drawing	Basic Material / Material Standard	Weight GR./NET
3	002	PAAD032037	VERTICAL OIL DRAIN	DAAD013785		59,3
1	001	107.246.799.200	PLATE	107.246.799		15,0

Free space for lic. | Q-Code: XXXXX | Standard: ISO; JIS | Main Drw.

Modif.	Number	Drawn date	Number	Drawn date
	(A) EAAD083540	01.02.2012	(B) EAAD090135	13.12.2018

WIN GD Winterthur Gas & Diesel

Product: 7X35-B

LUBRICATING OIL DRAIN TANK
WITH VERTICAL DRAINS

SURFACE PROTECTION SEE GROUP 0344	Units mm kg	NX	Basic Material	Net Weight 193
	Made 10.02.2011 W.Wroblewski	Scale 1:10	Size A0	Page 1/1
TOLERANCING PRINCIPLE ISO8015	Chkd 25.03.2011 sfe006 Feuerstein	Design Group 9722	Material ID PAAD032970	
GENERAL TOLERANCES ACCORDING TO ISO2768-mK	Appd 25.03.2011 dst009 Strödecke		Drawing ID DAAD014287	Rev. B

Approved

DID - DIMENSIONAL DRAWING - Confidential

Copyright Winterthur Gas & Diesel Ltd. All rights reserved. By taking possession of the drawing the recipient recognizes and honours these rights. Neither the whole nor any part of this drawing may be used in any way for construction, fabrication, marketing or any other purpose nor copied in any way nor made accessible to third parties without the previous written consent of Winterthur Gas & Diesel Ltd.

TANK PROPOSAL

8X35-B

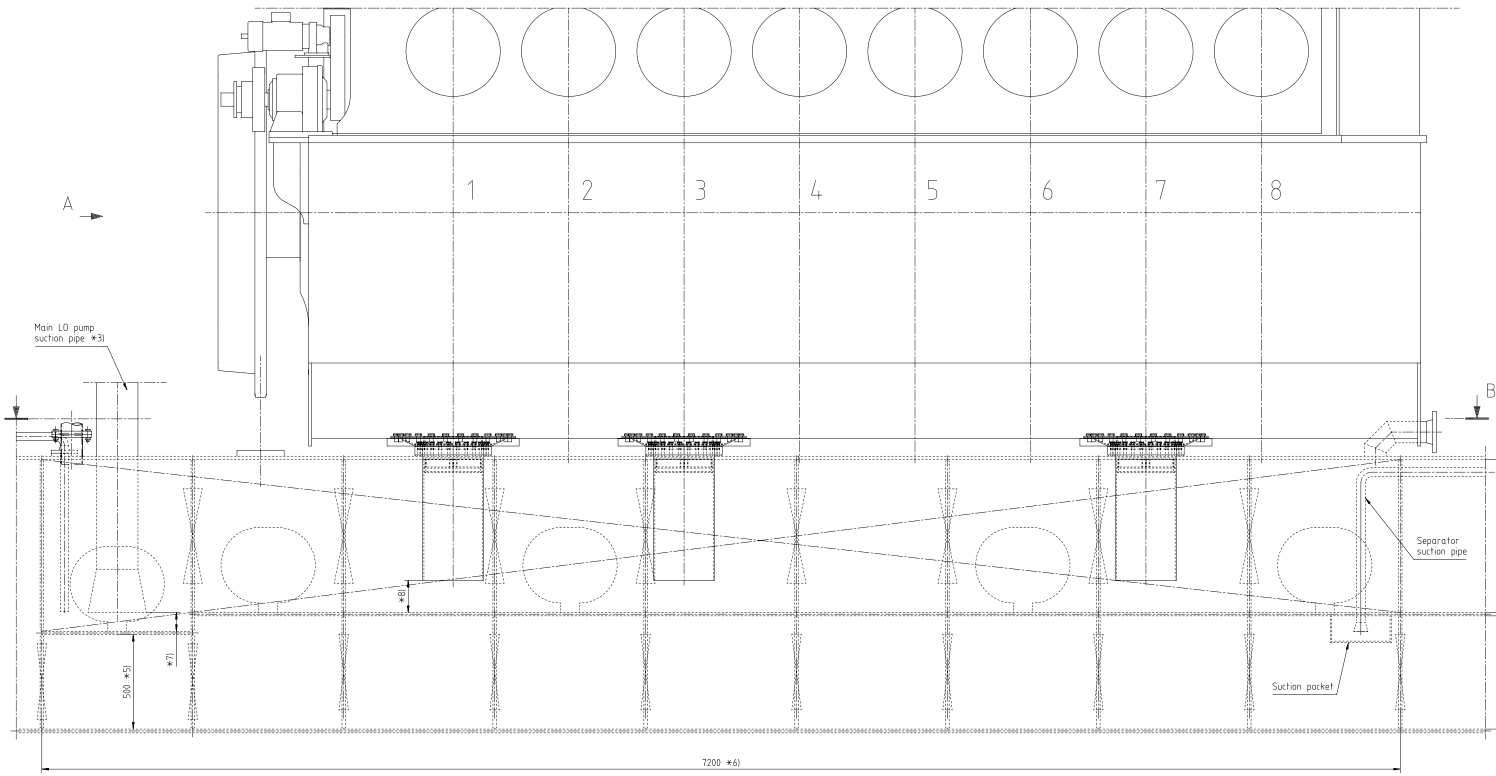

A (DRIVING END)

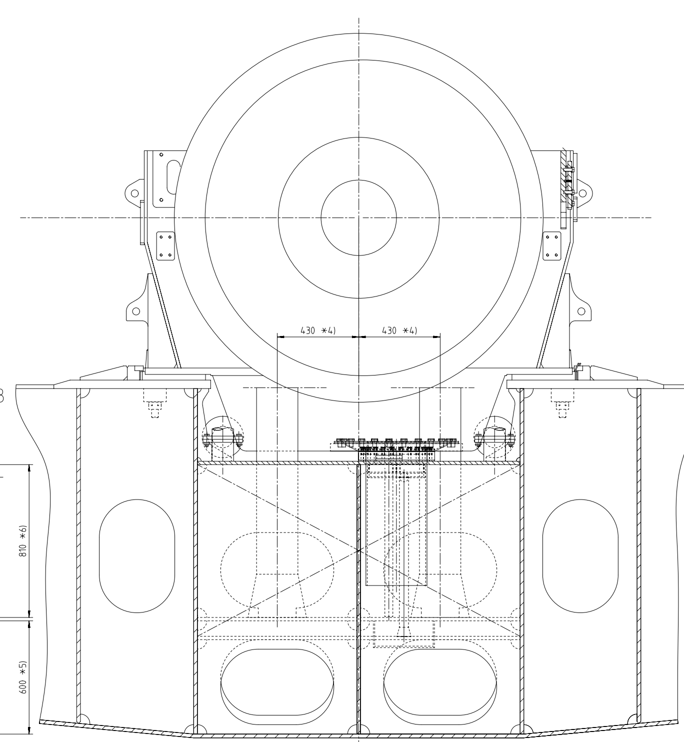

B-B

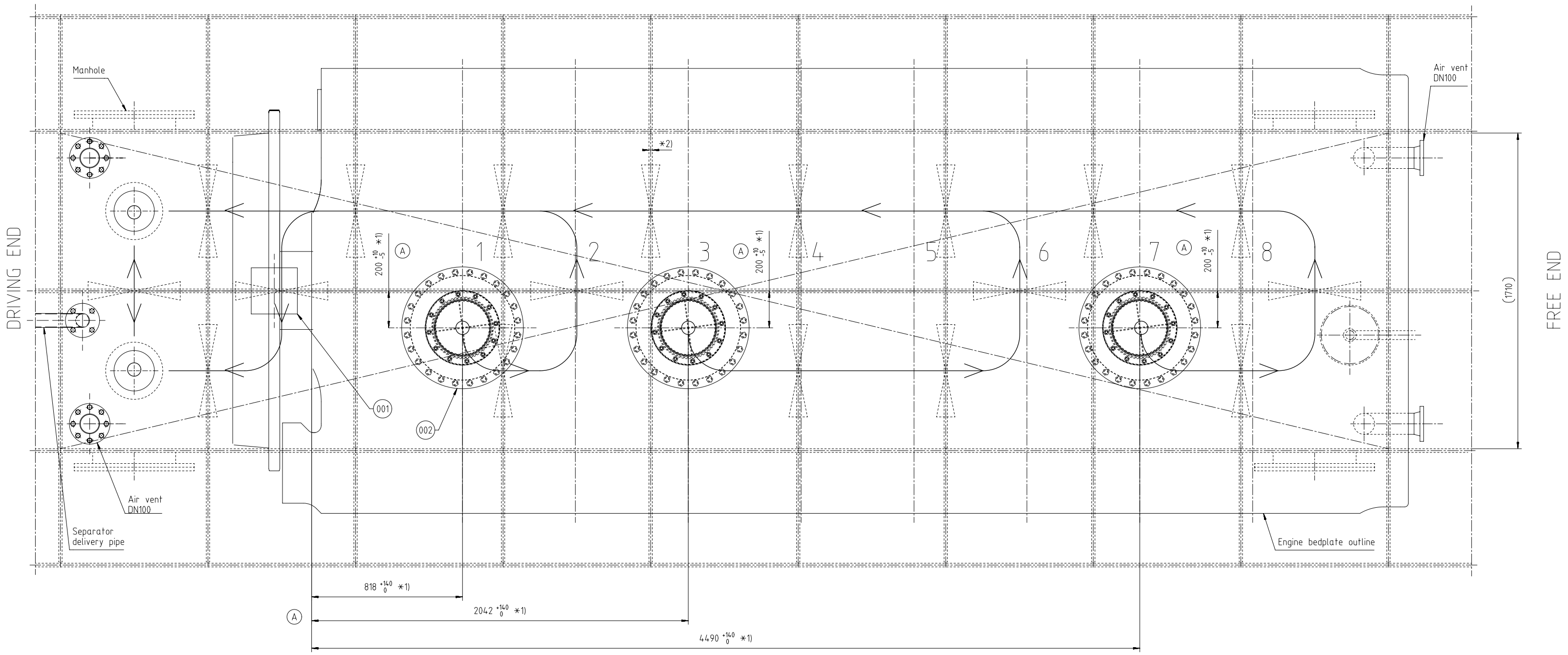

(A) REMARKS:

*1) Drains must be arranged by the shipyard in accordance with the shiphull structure and within the specified tolerance range. As soon as the final positions are determined the engine manufacturer must be informed so that the bedplate (oil pan) holes can be machined in compliance with the engine builder drawing "BEDPLATE OIL DRAIN" (DG1110).

*2) Recommendation regarding plate thickness is given in the Marine Installation Drawing Set (MIDS) "ENGINE / SEATING FOUNDATION" (foundation arrangement drawing, DG9710).

*3) Recommendation regarding the pipe size is given in the system proposal as provided in the MIDS "LUBRICATING OIL SYSTEM" (LO system drawing, DG9722).

*4) Final position depends on the size of the flywheel casing and required space for the main LO pump.

*5) Final height must be in accordance with the rules of the relevant classification society.

*6 Proposal, final tank dimensions are to be determined by the shipyard in accordance with the shiphull structure, minimum required filling / circulation volume, pump suction requirements and rules of the relevant classification society. Requirements / design criteria for the tank layout are provided in the MIDS "LUBRICATING OIL DRAIN TANK - Filling Guidelines" (DG9722).

*7) Distance according to pump makers specification.

*8) The drain pipe outlet must be below the min. LO level (LO low level alarm height) though a gap of min. half of the drain pipe diameter (min. 1/2*DN) to the drain tank bottom has to be maintained.

QTY	SEQ NO	Material ID	Material Name / Dimension, Occ	Standard or Drawing	Basic Material Material Standard	Weight GR./NET
3	002	PAAD032037	VERTICAL OIL DRAIN	DAAD013785		59,3
1	001	107.246.799.200	PLATE	107.246.799		15,0

Free space for lic. | Q-Code: XXXXX | Standard: ISO; JIS | Main Drw.

Modif.	Number	Drawn date
A	EAAD090135	13.12.2018

WIN GD Winterthur Gas & Diesel

Product: 8X35-B

LUBRICATING OIL DRAIN TANK
WITH VERTICAL DRAINS

Units: mm kg | NX | Basic Material | Net Weight 193

SURFACE PROTECTION SEE GROUP 0344	Made	25.04.2012 wwr001 W.Wroblewski
TOLERANCING PRINCIPLE ISO8015	Chkd	17.07.2012 mhu019 Hug
GENERAL TOLERANCES ACCORDING TO ISO2768-mK	Appd	18.07.2012 dst009 Strödecke

Scale 1:10 | Size A0 | Page 1/1 | Material ID PAAD084331

Design Group 9722 | Drawing ID DAAD027452 | Rev. A

DID - DIMENSIONAL DRAWING - Confidential

Approved

Copyright Winterthur Gas & Diesel Ltd. All rights reserved. By taking possession of the drawing the recipient recognizes and honours these rights. Neither the whole nor any part of this drawing may be used in any way for construction, fabrication, marketing or any other purpose nor copied in any way nor made accessible to third parties without the previous written consent of Winterthur Gas & Diesel Ltd.

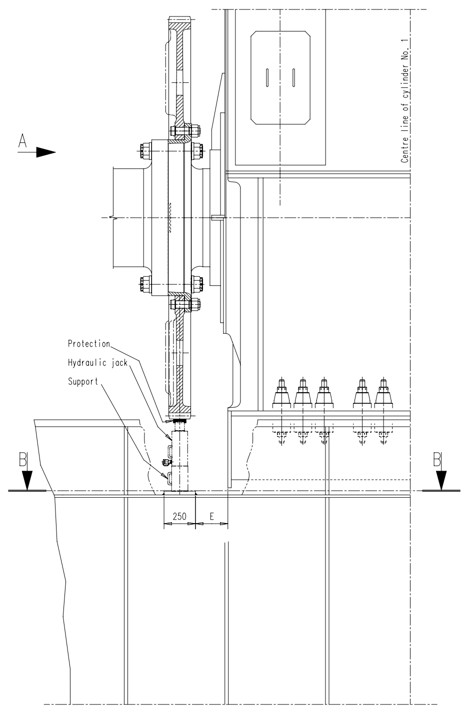

A

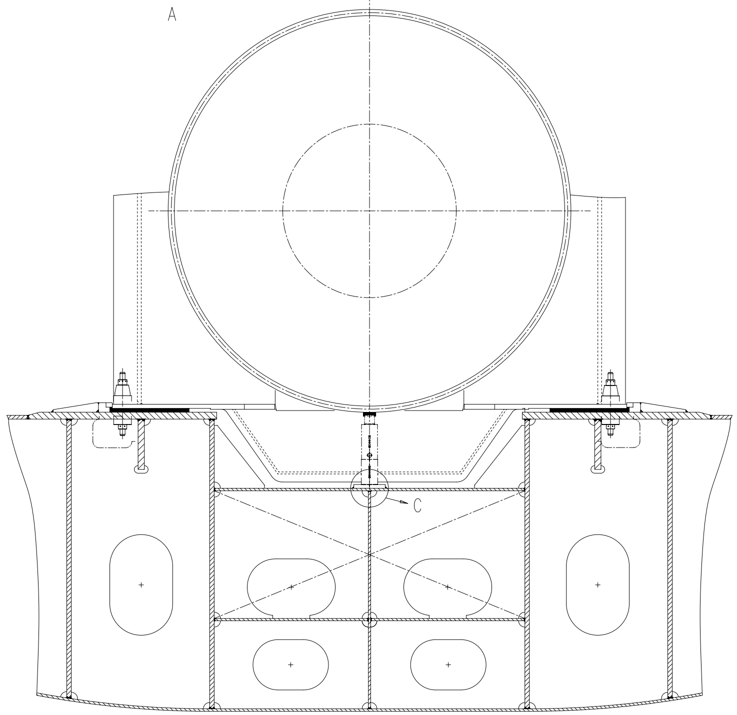

ENGINE TYPE	D	E approx.
RT-flex50-D/DF	1387	165
X82-B	2395	460
X35-B	1015	124
X40-B	1170	172
X52/X52DF/X52DF-1.0/X52DF-2.1	1630	325
X62-B/X62DF/X62DF-1.1/X62DF-2.1	1888	343
X72-B/X72DF/X72DF-1.1&1.2/X72DF-2.1&2.2	2131	370
X82-2.0/X82DF-1.0	2395	460
X92-B/-X92DF	2677	334

B-B

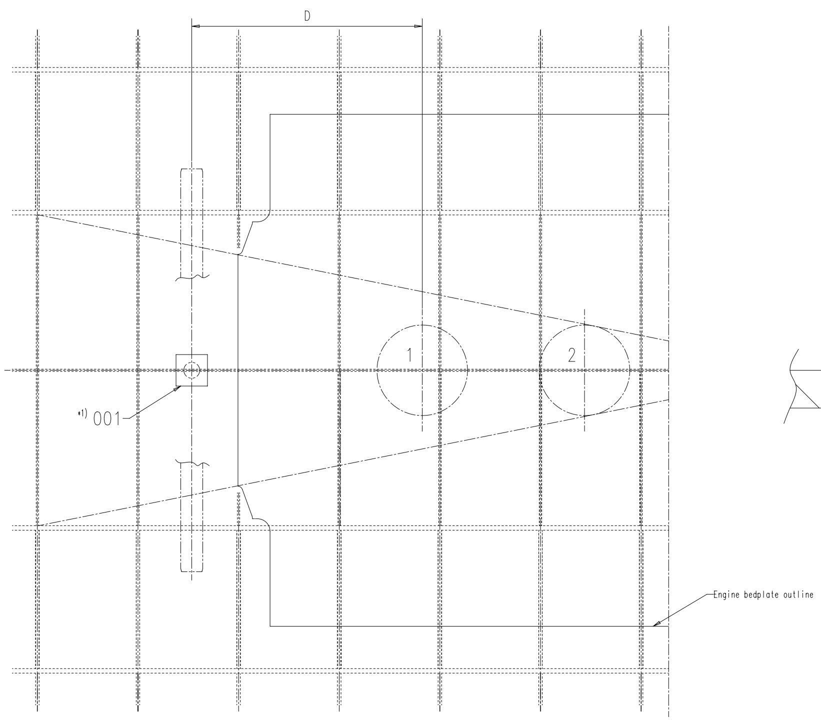

C 1 : 5

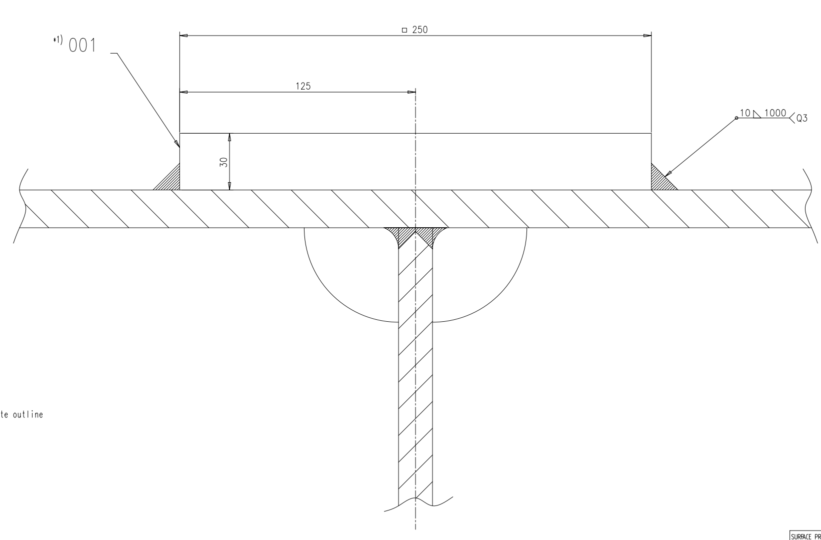

REMARKS:

*1) Access to the plate has to be kept clear for the hydraulic jack, to lift up the flywheel, during removal of lower main bearing shell.

Quantity	SEQ NO	Material ID	Material Name / Dimension, Occ	Standard or Drawing	Basic Material / Material Standard	Weight GR./NET
1	001	107.246.799.001	FLAT BAR	107.246.799		15,0

NetWeight 15

MaterialID 107.246.799.200

Free space for lic.

Q-Code XXXXX

Standard ISO; JIS

Main Drw.

Modif.	Number	Drawn date
F	EAAD084725	18.09.2013
G	EAAD084974	20.03.2014
H	EAAD086107	11.09.2015
I	EAAD095725	18.01.2021

WIN GD Winterthur Gas & Diesel

Product W-2S

PLATE
TO HYDRAULIC JACK
Blech

Units mm kg | NX | Basic Material | Net Weight

SURFACE PROTECTION SEE GROUP 0344
TOLERANCING PRINCIPLE ISO8015
GENERAL TOLERANCES ACCORDING TO ISO2768-mK

Made 09.11.2000 S.Stylianou
Chkd
Appd 09.11.2000 WCH001 Service User

Scale 1:14 | Size A0 | Page 1/1 | Material ID
Design Group 9722 | Drawing ID 107.246.799 | Rev. I

Approved

ASD - ASSEMBLY DRAWING - Internal

Copyright Winterthur Gas & Diesel Ltd. All rights reserved. By taking possession of the drawing the recipient recognizes and honours these rights. Neither the whole nor any part of this drawing may be used in any way for construction, fabrication, marketing or any other purpose nor copied in any way nor made accessible to third parties without the previous written consent of Winterthur Gas & Diesel Ltd.

SECTION A-A

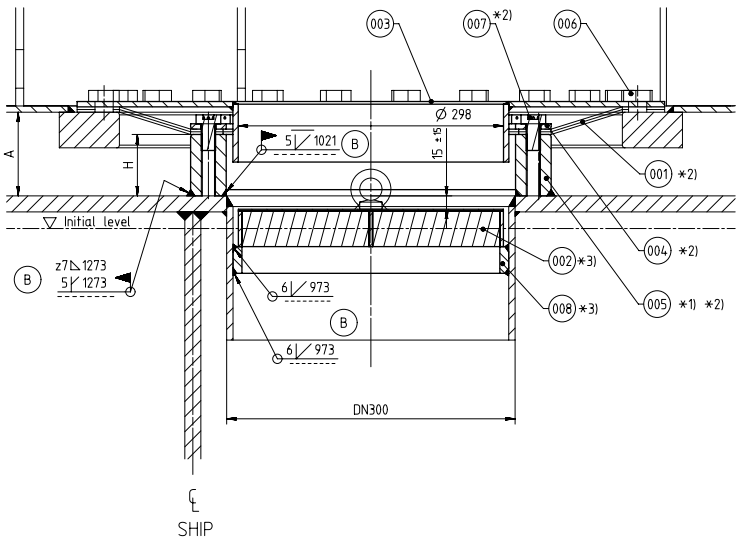

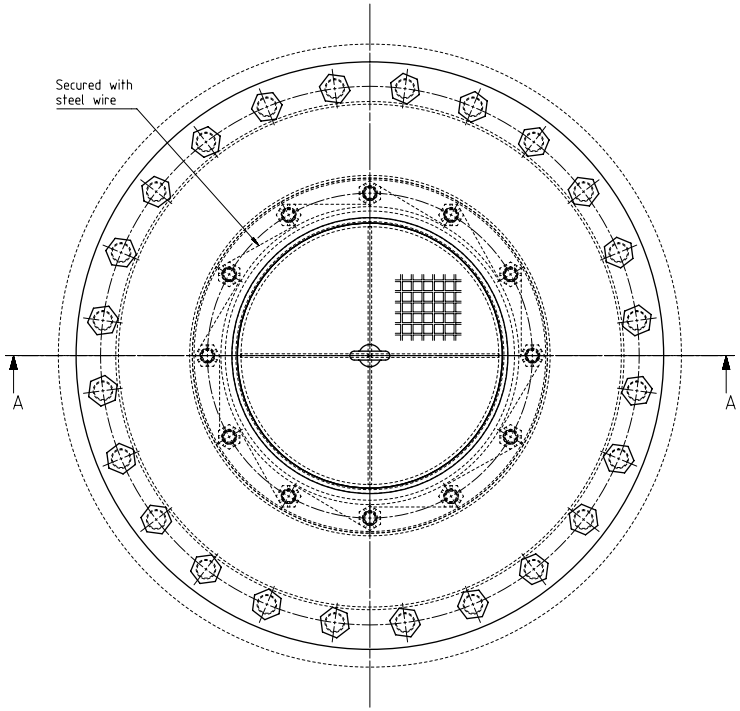

REMARKS:

*1) To be aligned after engine is in final position.

*2) Pos. 001, 004, 005 and 007 to be pre-assembled prior to alignment.
After alignment the Pos. 005 (flange) can be welded in place.

*3) Designed for pipe Ø 323.9 x 7.1

	A	To be measured after alignment of the engine
B	H	A - 25 mm

Items 001 to 008 are yard delivery.

GTY	SEQ NO	Material ID	Material Name / Dimension, Occ	Standard or Drawing	Basic Material / Material Standard	Weight GR./NET
1	008	PAAD031395	RING	DAAD013903	S235JRG2 SS400	2,07
12	007	015.151.372.201	HEXAGON HEAD SCREW M16x30		8.8	0,071
24	006	015.151.044.201	HEXAGON HEAD SCREW M20x30	ISO 4017	8.8	0,134
1	005	PAAD030948	WELDING FLANGE	DAAD013739	W-FU-235-J0	23,5
1	004	PAAD030945	RING	DAAD013763	W-FU-235-J0	2,4
1	003	PAAD031022	COVER	DAAD013688		26,6
1	002	PAAD031429	OIL STRAINER	DAAD013848		3,02
2	001	PAAD031317	RUBBER GASKET	DAAD013764	NBR Perbunan	1,2

Free space for lic.

Q-Code: XXXXX
Standard: ISO; JIS
Main Drw.

Modif.	Number	Drawn date	Number	Drawn date	Number	Drawn date	Number	Drawn date
A	EAAD083145	25.01.2012	B EAAD091530	04.12.2019				

WIN GD Winterthur Gas & Diesel

Product: W-2S

VERTICAL OIL DRAIN

Oelablauf vertikal

Units: mm kg | NX | Basic Material | Net Weight 64,1

SURFACE PROTECTION SEE GROUP 0344	Made	27.01.2011	mhu019 M.Hug
TOLERANCING PRINCIPLE ISO8015	Chkd	31.01.2011	sfe006 Feuerstein
GENERAL TOLERANCES ACCORDING TO ISO2768-mK	Appd	31.01.2011	dst009 Strödecke

Scale 1:3 | Size A1 | Page 1/1 | Material ID PAAD032037
Design Group 9722 | Drawing ID DAAD013785 | Rev. B

DIM - DIMENSIONAL DRAWING - Confidential

Copyright Winterthur Gas & Diesel Ltd. All rights reserved. By taking possession of the drawing the recipient recognizes and honours these rights. Neither the whole nor any part of this drawing may be used in any way for construction, fabrication, marketing or any other purpose nor copied in any way nor made accessible to third parties without the previous written consent of Winterthur Gas & Diesel Ltd.

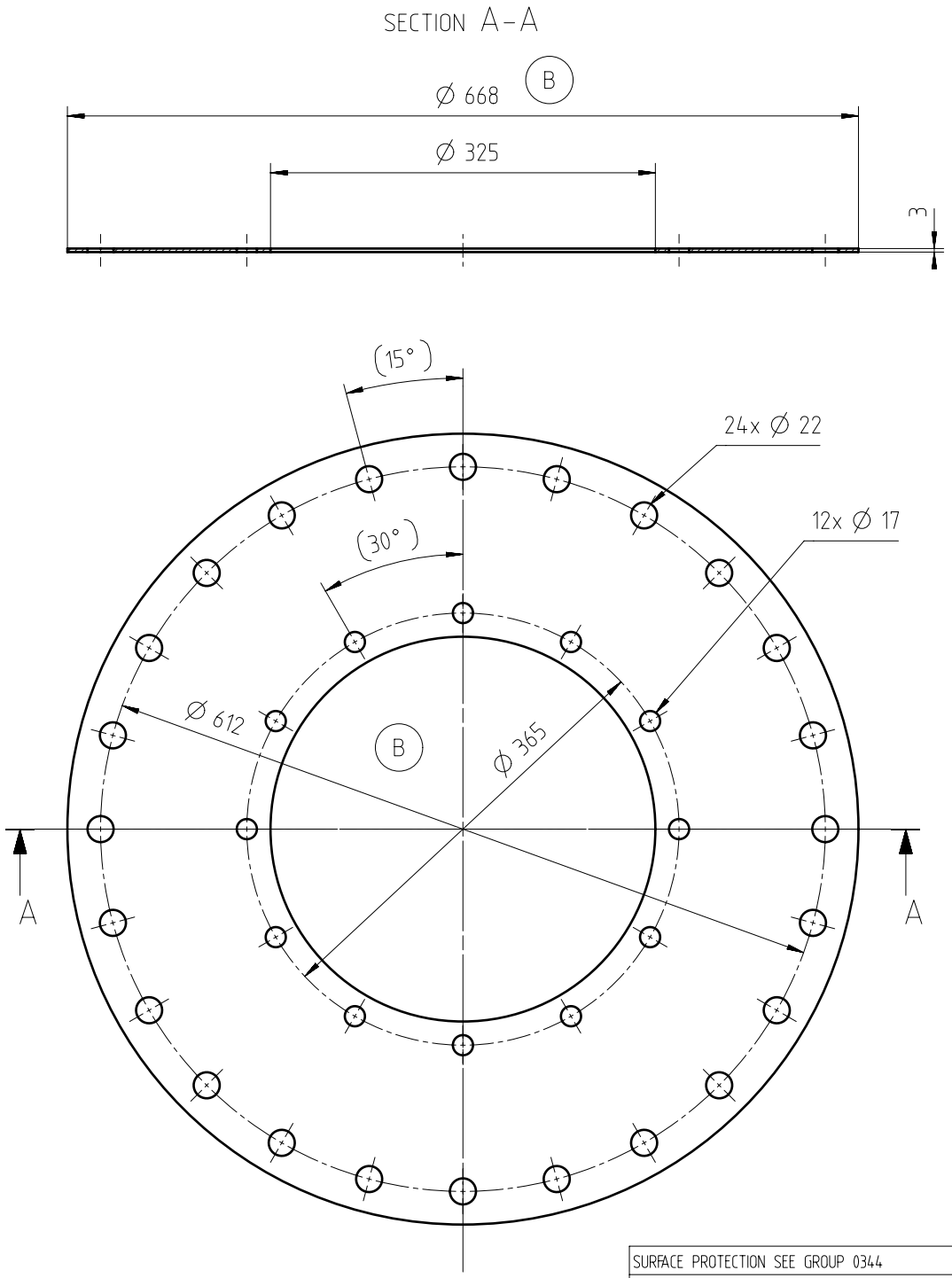

Free space for lic.									Q-Code XXXXX		Main Drw.	
									Standard ISO; JIS			
Modif.	A	EAAD083145	25.01.2012	B	EAAD091530	12.11.2019						
		Number	Drawn date		Number	Drawn date		Number	Drawn date		Number	Drawn date

WIN GD Winterthur Gas & Diesel

Product W-2S

RUBBER GASKET
VERTICAL OIL DRAIN
Gummidichtung
Oelablauf vertikal

Units mm kg	NX	Basic Material NBR Perbunan				Net Weight 1,2	
Made	21.01.2011 mhu019 M.Hug	Scale 1:4	Size A3	Page 1/1	Material ID PAAD031317		
Chkd	31.01.2011 sfe006 Feuerstein	Design Group 9722	Drawing ID DAAD013764			Rev. B	
Appd	31.01.2011 dst009 Strödecke						

SURFACE PROTECTION SEE GROUP 0344
TOLERANCING PRINCIPLE ISO8015
GENERAL TOLERANCES ACCORDING TO ISO2768-mK

Approved

DID - DIMENSIONAL DRAWING - Confidential

Copyright Winterthur Gas & Diesel Ltd. All rights reserved. By taking possession of the drawing the recipient recognizes and honours these rights. Neither the whole nor any part of this drawing may be used in any way for construction, fabrication, marketing or any other purpose nor copied in any way nor made accessible to third parties without the previous written consent of Winterthur Gas & Diesel Ltd.

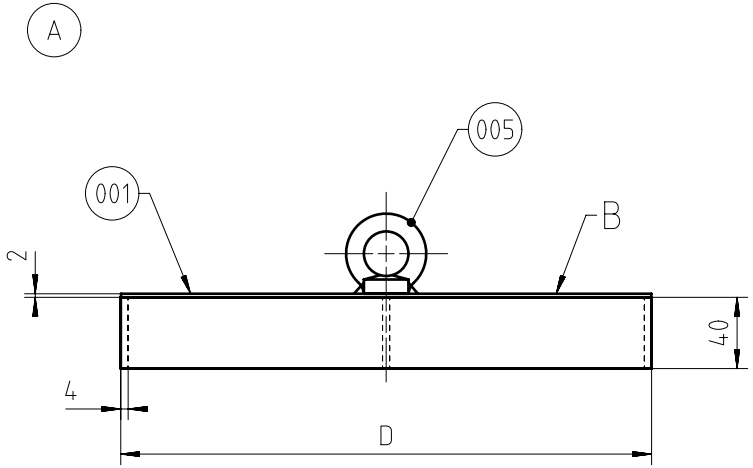

Parameter D and d related to inner pipe diameter (DN300) inside of drain tank

d = pipe inner diameter - 20 mm

D = d + 8 mm

L = d

l = d/2 - 2 mm

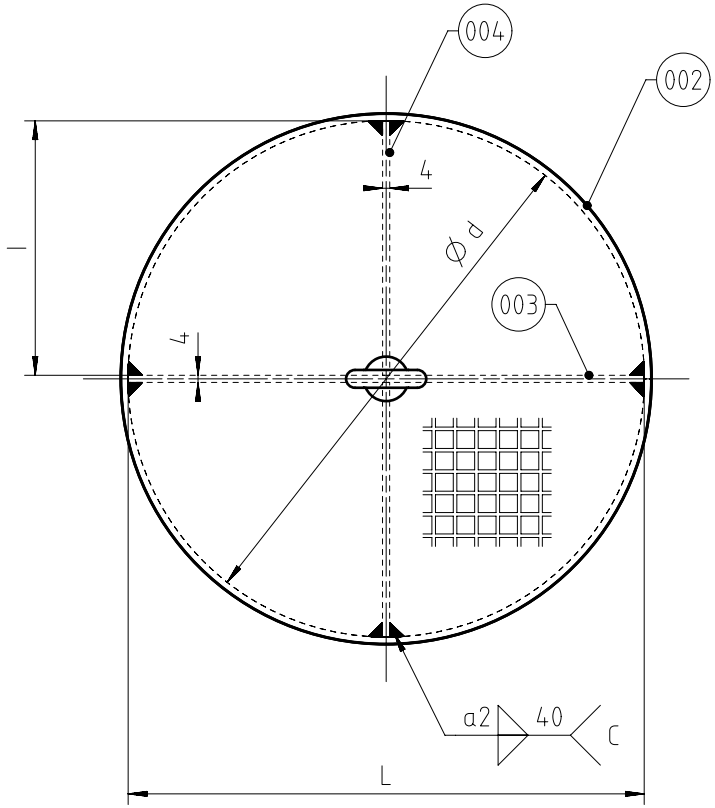

DETAIL B

SCALE 1:2

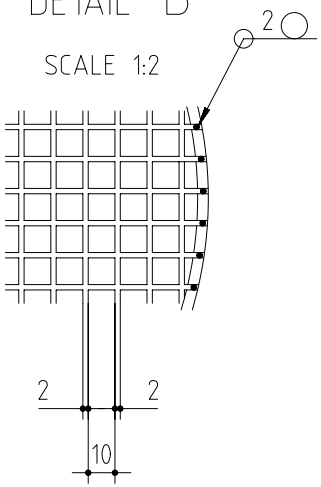

QTY	SEQ NO	Material ID	Material Name / Dimension, Occ	Standard or Drawing	Basic Material / Material Standard	Weight GR./NET
1	005	015.201.531.730	EYE NUT M10	DIN 582	C15;S15C	0,09
2	004	PAAD031427	FLAT BAR	DAAD127677	W-FU-235-JR	0,17
1	003	PAAD031426	FLAT BAR	DAAD127674	W-FU-235-JR	0,36
1	002	PAAD031396	RING	DAAD013964	W-FU-235-JR	1,15
1	001	PAAD031425	PERFORATED SHEET	DAAD127672	W-FU-235-JR	1,08

Approved

Free space for lic.

Q-Code: XXXXX

Standard: ISO; JIS

Main Drw.

Modif.	Number	Drawn date	Number	Drawn date	Number	Drawn date	Number	Drawn date
A	EAAD091530	25.02.2020						

WIN GD Winterthur Gas & Diesel

Product: W-2S

OIL STRAINER
VERTICAL OIL DRAIN
Oelsieb

Units: mm kg | NX | Basic Material | Net Weight 3,02

SURFACE PROTECTION SEE GROUP 0344

TOLERANCING PRINCIPLE ISO8015

GENERAL TOLERANCES ACCORDING TO ISO2768-mK

Made	27.01.2011	mhu019	M.Hug
Chkd	31.01.2011	sfe006	Feuerstein
Appd	31.01.2011	dst009	Strödecke

Scale 1:3 | Size A3 | Page 1/1 | Material ID PAAD031429

Design Group 9722 | Drawing ID DAAD013848 | Rev. A

DID - DIMENSIONAL DRAWING - Confidential

Copyright Winterthur Gas & Diesel Ltd. All rights reserved. By taking possession of the drawing the recipient recognizes and honours these rights. Neither the whole nor any part of this drawing may be used in any way for construction, fabrication, marketing or any other purpose nor copied in any way nor made accessible to third parties without the previous written consent of Winterthur Gas & Diesel Ltd.

A

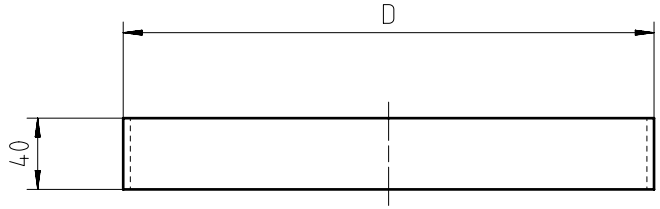

Parameter D and d related to inner pipe diameter (DN300) inside of drain tank

d = pipe inner diameter - 20 mm

D = d + 8 mm

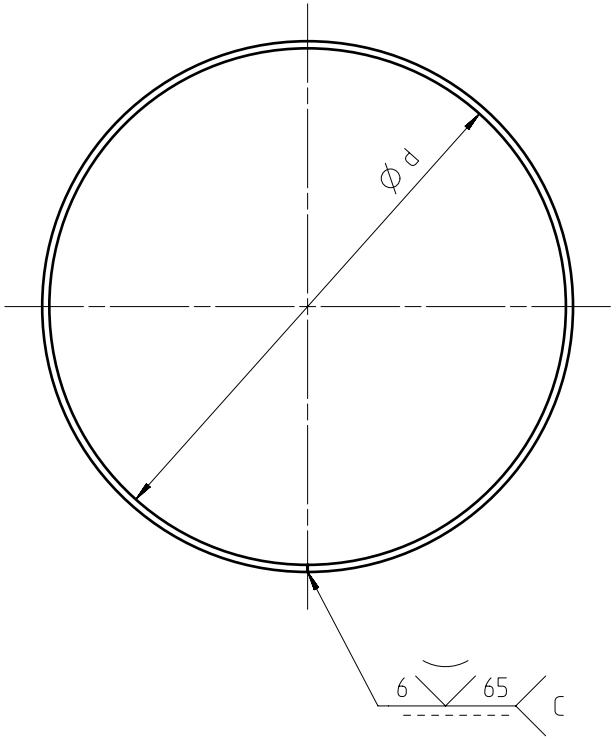

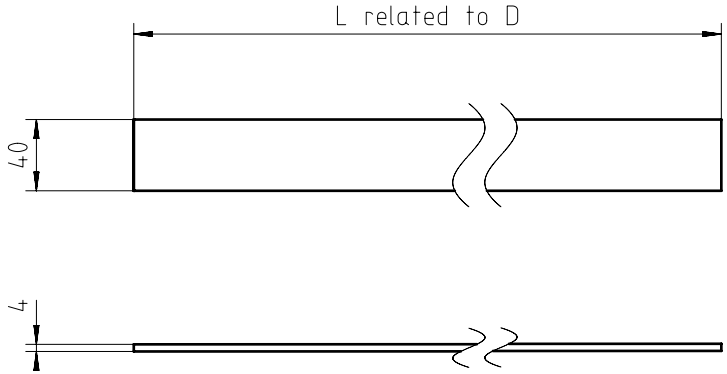

Free space for lic.									Q-Code XXXXX		Main Drw.
									Standard ISO; JIS		
Modif.	A	EAAD091530	17.02.2020								
		Number	Drawn date	Number	Drawn date	Number	Drawn date	Number	Drawn date		

WIN GD Winterthur Gas & Diesel

Product W-2S

RING

Ring

Units mm kg	NX		Basic Material W-FU-235-JR				Net Weight 1,15
SURFACE PROTECTION SEE GROUP 0344	Made	31.01.2011	mhu019 M.Hug	Scale 1:3	Size A3	Page 1/1	Material ID PAAD031396
TOLERANCING PRINCIPLE ISO8015	Chkd	31.01.2011	sfe006 Feuerstein	Design Group 9722	Drawing ID DAAD013964		Rev. A
GENERAL TOLERANCES ACCORDING TO ISO2768-mK	Appd	31.01.2011	dst009 Strödecke				

Approved

DID - DIMENSIONAL DRAWING - Confidential

Copyright Winterthur Gas & Diesel Ltd. All rights reserved. By taking possession of the drawing the recipient recognizes and honours these rights. Neither the whole nor any part of this drawing may be used in any way for construction, fabrication, marketing or any other purpose nor copied in any way nor made accessible to third parties without the previous written consent of Winterthur Gas & Diesel Ltd.

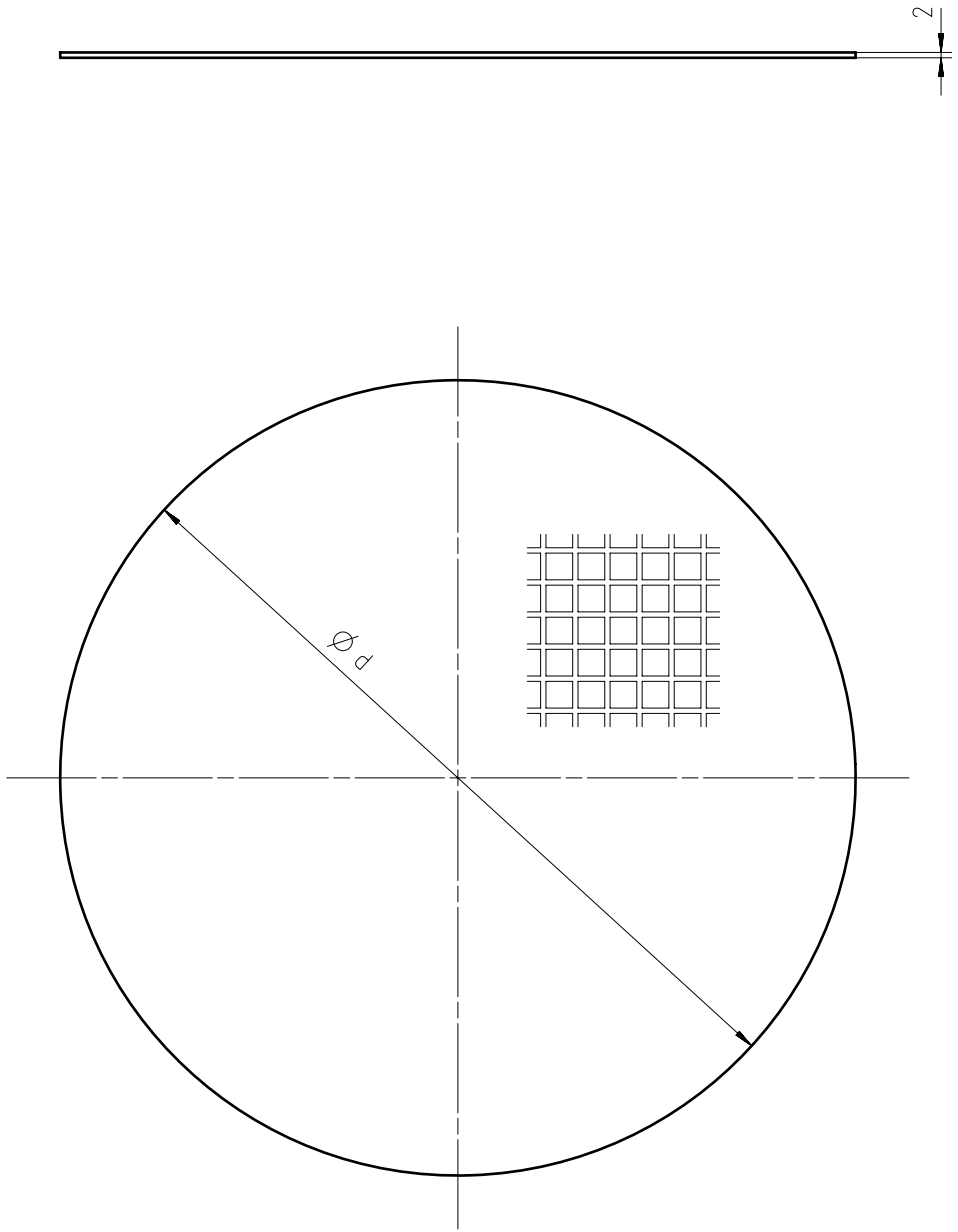

Parameter d related to inner pipe diameter (DN300) inside of drain tank
d = Pipe diameter inside - 20 mm

Free space for lic.		Q-Code XXXXX	Main Drw.
		Standard ISO; JIS	

Modif.	Number	Drawn date	Number	Drawn date	Number	Drawn date	Number	Drawn date

WIN GD Winterthur Gas & Diesel

Product W-2S

PERFORATED SHEET

Lochblech

Units mm kg	NX	Basic Material W-FU-235-JR			Net Weight 1,08
SURFACE PROTECTION SEE GROUP 0344	Made 25.02.2020 dki021 dh.Kim	Scale 1:2	Size A3	Page 1/1	Material ID PAAD031425
TOLERANCING PRINCIPLE ISO8015	Chkd 02.09.2020 jpi101 Pickup	Design Group 9722	Drawing ID DAAD127672		Rev. –
GENERAL TOLERANCES ACCORDING TO ISO2768-mK	Appd 04.09.2020 mhu019 Hug				

Approved

DID - DIMENSIONAL DRAWING - Confidential

Copyright Winterthur Gas & Diesel Ltd. All rights reserved. By taking possession of the drawing the recipient recognizes and honours these rights. Neither the whole nor any part of this drawing may be used in any way for construction, fabrication, marketing or any other purpose nor copied in any way nor made accessible to third parties without the previous written consent of Winterthur Gas & Diesel Ltd.

Parameter L related to inner pipe diameter (DN300) inside of drain tank
L = Pipe diameter inside - 20 mm

Free space for lic.									Q-Code XXXXX		Main Drw.
									Standard ISO; JIS		
Modif.	Number	Drawn date	Number	Drawn date	Number	Drawn date	Number	Drawn date			

WIN GD Winterthur Gas & Diesel

Product W-2S

FLAT BAR

Flachstahl

Units mm kg	NX	Basic Material W-FU-235-JR				Net Weight 0,36
SURFACE PROTECTION SEE GROUP 0344	Made 25.02.2020 dki021 DH.Kim	Scale 1:1	Size A3	Page 1/1	Material ID PAAD031426	
TOLERANCING PRINCIPLE ISO8015	Chkd 02.09.2020 jpi101 Pickup	Design Group 9722	Drawing ID DAAD127674			Rev. –
GENERAL TOLERANCES ACCORDING TO ISO2768-mK	Appd 04.09.2020 mhu019 Hug					

Approved

DID - DIMENSIONAL DRAWING - Confidential

Copyright Winterthur Gas & Diesel Ltd. All rights reserved. By taking possession of the drawing the recipient recognizes and honours these rights. Neither the whole nor any part of this drawing may be used in any way for construction, fabrication, marketing or any other purpose nor copied in any way nor made accessible to third parties without the previous written consent of Winterthur Gas & Diesel Ltd.

SURFACE PROTECTION SEE GROUP 0344

TOLERANCING PRINCIPLE ISO8015

GENERAL TOLERANCES ACCORDING TO ISO2768-mK

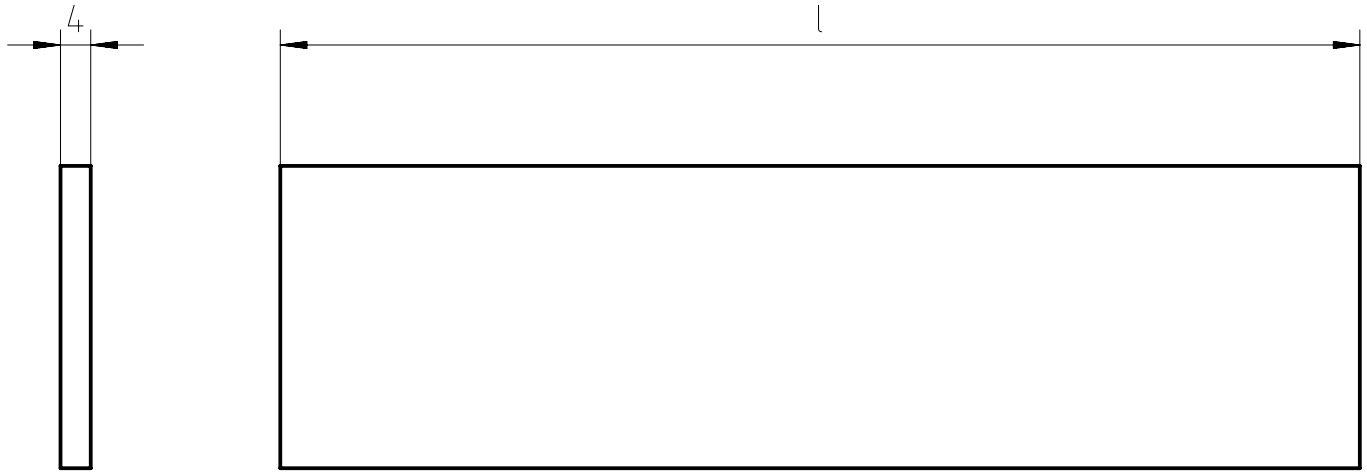

Parameter l related to inner pipe diameter (DN300) inside of drain tank
l = Pipe radius inside - 20 mm

Approved

Copyright Winterthur Gas & Diesel Ltd. All rights reserved.
By taking possession of the drawing the recipient recognizes and honours these rights. Neither the whole nor any part of this drawing may be used in any way for construction, fabrication, marketing or any other purpose nor copied in any way nor made accessible to third parties without the previous written consent of Winterthur Gas & Diesel Ltd.

Free space for lic.		Q-Code XXXXX	Main Drw.
		Standard ISO; JIS	

Modif.	Number	Drawn date	Number	Drawn date	Number	Drawn date	Number	Drawn date

WIN GD Winterthur Gas & Diesel

Product W-2S

FLAT BAR

Flachstahl

Units mm kg	NX	Basic Material W-FU-235-JR			Net Weight 0,17
Made	25.02.2020 dki021 DH.Kim	Scale 1:1	Size A4	Page 1/1	Material ID PAAD031427
Chkd	02.09.2020 jpi101 Pickup	Design Group 9722	Drawing ID DAAD127677		Rev. –
Appd	04.09.2020 mhu019 Hug				

DID - DIMENSIONAL DRAWING - Confidential

A

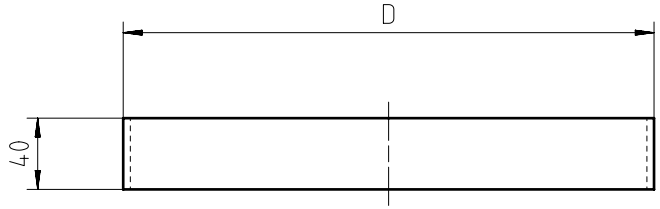

Parameter D and d related to inner pipe diameter (DN300) inside of drain tank

d = pipe inner diameter - 20 mm

D = d + 8 mm

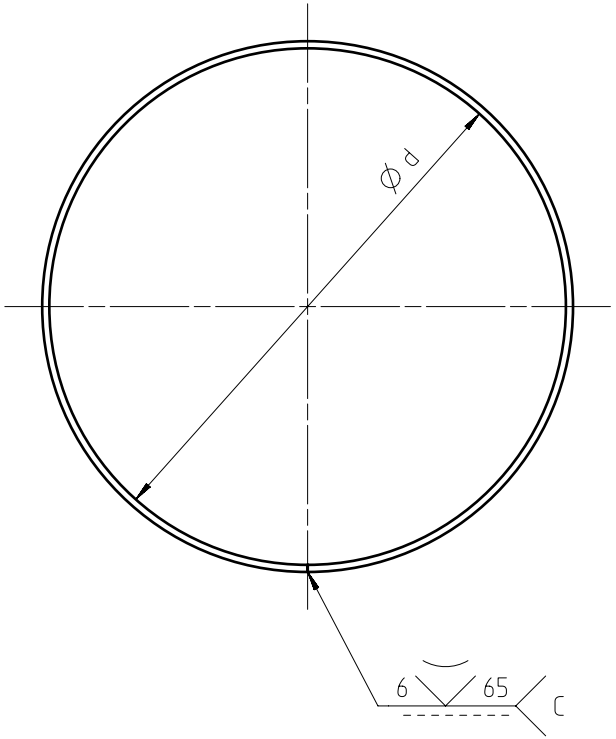

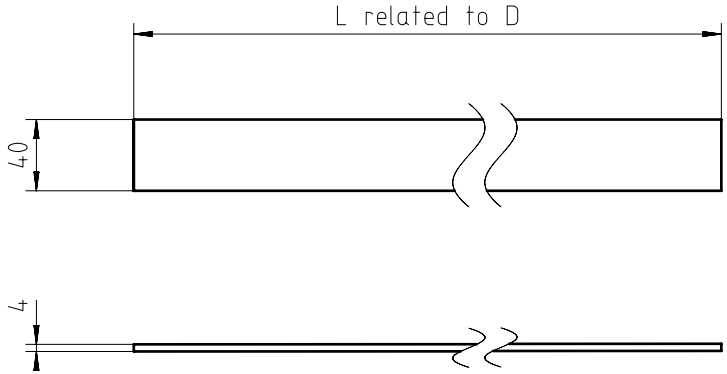

Free space for lic.									Q-Code XXXXX		Main Drw.
									Standard ISO; JIS		
Modif.	A	EAAD091530	17.02.2020								
		Number	Drawn date	Number	Drawn date	Number	Drawn date	Number	Drawn date		

WIN GD Winterthur Gas & Diesel

Product W-2S

RING

Ring

Units mm kg	NX		Basic Material W-FU-235-JR				Net Weight 1,15
SURFACE PROTECTION SEE GROUP 0344	Made	31.01.2011	mhu019 M.Hug	Scale 1:3	Size A3	Page 1/1	Material ID PAAD031396
TOLERANCING PRINCIPLE ISO8015	Chkd	31.01.2011	sfe006 Feuerstein	Design Group 9722	Drawing ID DAAD013964		Rev. A
GENERAL TOLERANCES ACCORDING TO ISO2768-mK	Appd	31.01.2011	dst009 Strödecke				

Approved

DID - DIMENSIONAL DRAWING - Confidential

Copyright Winterthur Gas & Diesel Ltd. All rights reserved. By taking possession of the drawing the recipient recognizes and honours these rights. Neither the whole nor any part of this drawing may be used in any way for construction, fabrication, marketing or any other purpose nor copied in any way nor made accessible to third parties without the previous written consent of Winterthur Gas & Diesel Ltd.

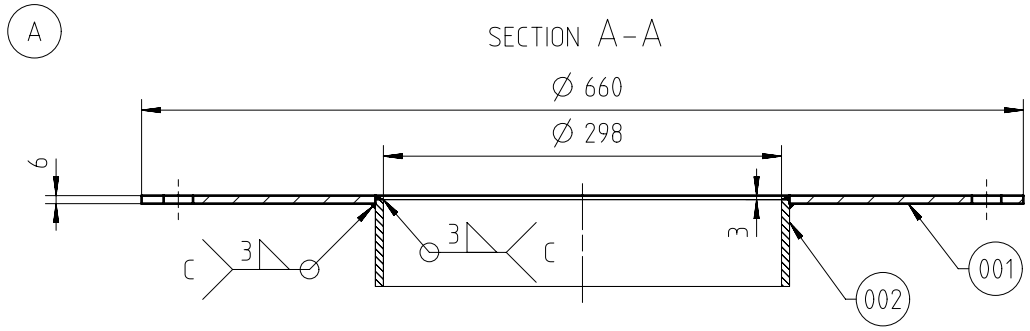

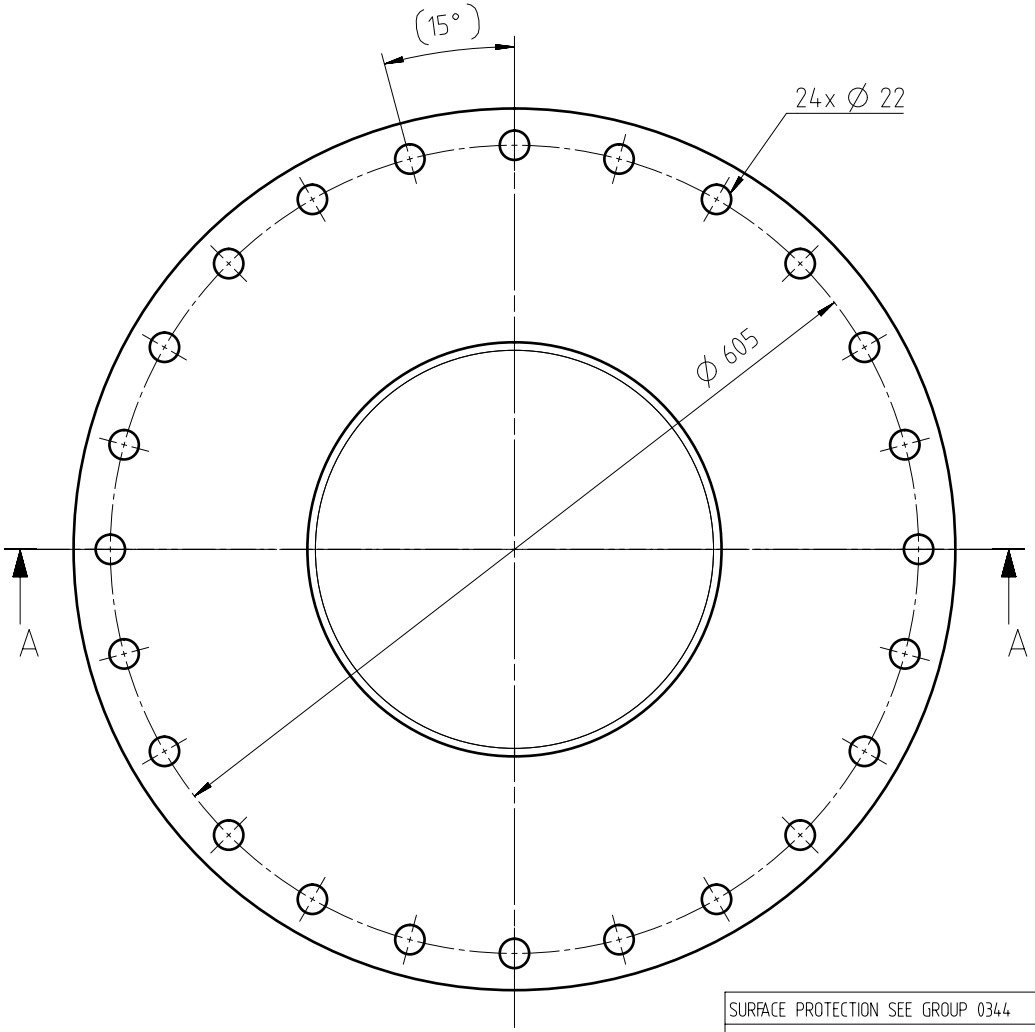

QTY	SEQ NO	Material ID	Material Name / Dimension, Occ	Standard or Drawing	Basic Material / Material Standard	Weight GR./NET
1	002	PAAD031021	RING	DAAD013645	W-FU-235-JR	5,8
1	001	PAAD031020	PLATE	DAAD013657	W-FU-235-JR	12,1

Free space for lic.

Q-Code: XXXXX

Standard: ISO; JIS

Main Drw.

Modif.	Number	Drawn date	Number	Drawn date	Number	Drawn date	Number	Drawn date
A	EAAD091530	18.02.2020						

WIN GD Winterthur Gas & Diesel

Product: W-2S

COVER
VERTICAL OIL DRAIN
Abdeckung

Units: mm kg | NX | Basic Material | Net Weight 17,9

SURFACE PROTECTION SEE GROUP 0344
TOLERANCING PRINCIPLE ISO8015
GENERAL TOLERANCES ACCORDING TO ISO2768-mK

Made	20.01.2011	mhu019 M.Hug
Chkd	31.01.2011	sfe006 Feuerstein
Appd	31.01.2011	dst009 Strödecke

Scale 1:4 | Size A3 | Page 1/1 | Material ID PAAD031022

Design Group 9722 | Drawing ID DAAD013688 | Rev. A

Approved

DID - DIMENSIONAL DRAWING - Confidential

Copyright Winterthur Gas & Diesel Ltd. All rights reserved. By taking possession of the drawing the recipient recognizes and honours these rights. Neither the whole nor any part of this drawing may be used in any way for construction, fabrication, marketing or any other purpose nor copied in any way nor made accessible to third parties without the previous written consent of Winterthur Gas & Diesel Ltd.

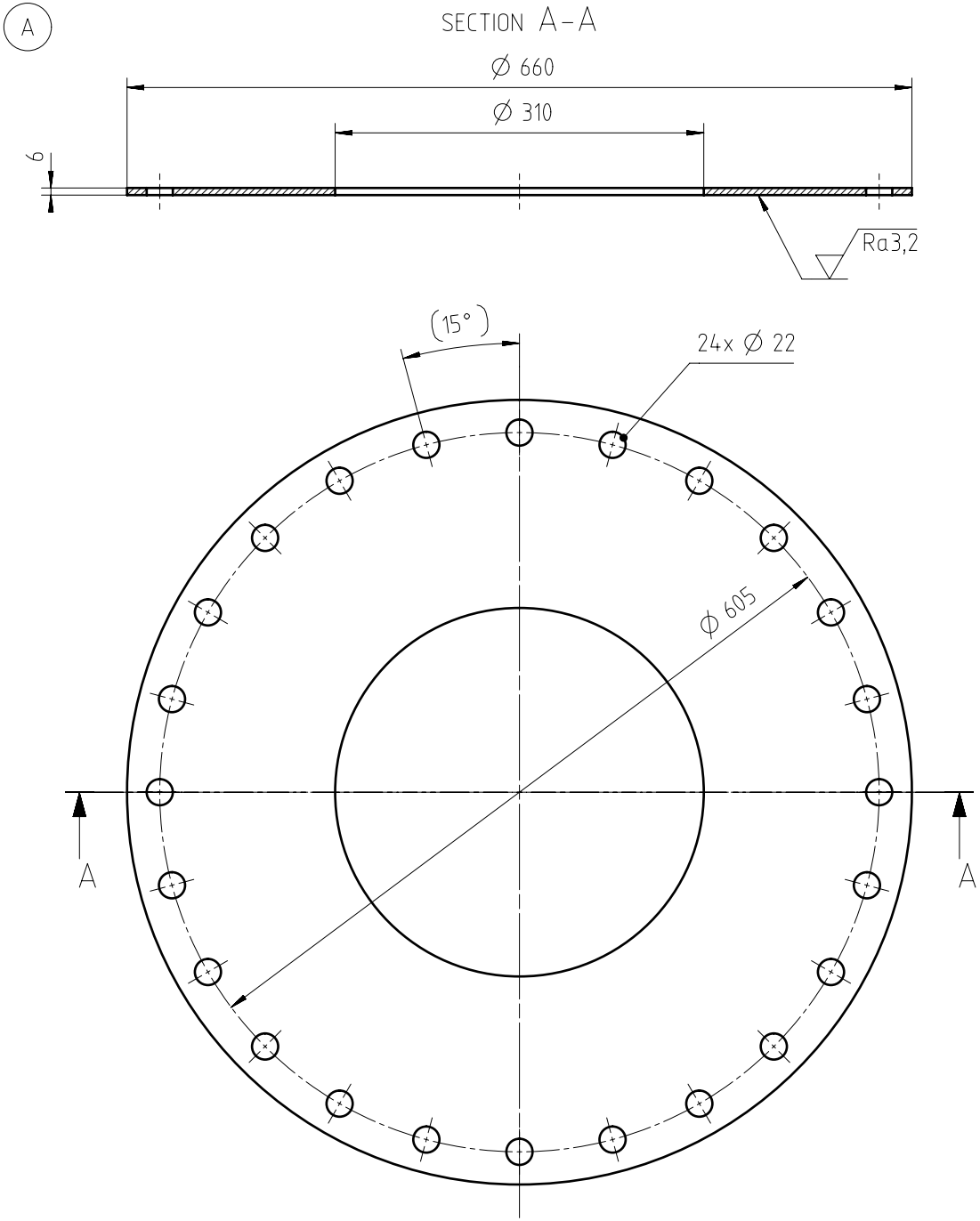

Free space for lic.									Q-Code XXXXX		Main Drw.
									Standard ISO; JIS		
Modif.	A	EAAD091530	17.02.2020								
		Number	Drawn date	Number	Drawn date	Number	Drawn date	Number	Drawn date		

WIN GD Winterthur Gas & Diesel

Product W-2S

PLATE

Blech

Units mm kg	NX		Basic Material W-FU-235-JR				Net Weight 12,1
Made	20.01.2011	mhu019 M.Hug	Scale 1:4	Size A3	Page 1/1	Material ID PAAD031020	
Chkd	31.01.2011	sfe006 Feuerstein	Design Group 9722	Drawing ID DAAD013657			Rev. A
Appd	31.01.2011	dst009 Strödecke					

SURFACE PROTECTION SEE GROUP 0344
TOLERANCING PRINCIPLE ISO8015
GENERAL TOLERANCES ACCORDING TO ISO2768-mK

Approved

DID - DIMENSIONAL DRAWING - Confidential

Copyright Winterthur Gas & Diesel Ltd. All rights reserved. By taking possession of the drawing the recipient recognizes and honours these rights. Neither the whole nor any part of this drawing may be used in any way for construction, fabrication, marketing or any other purpose nor copied in any way nor made accessible to third parties without the previous written consent of Winterthur Gas & Diesel Ltd.

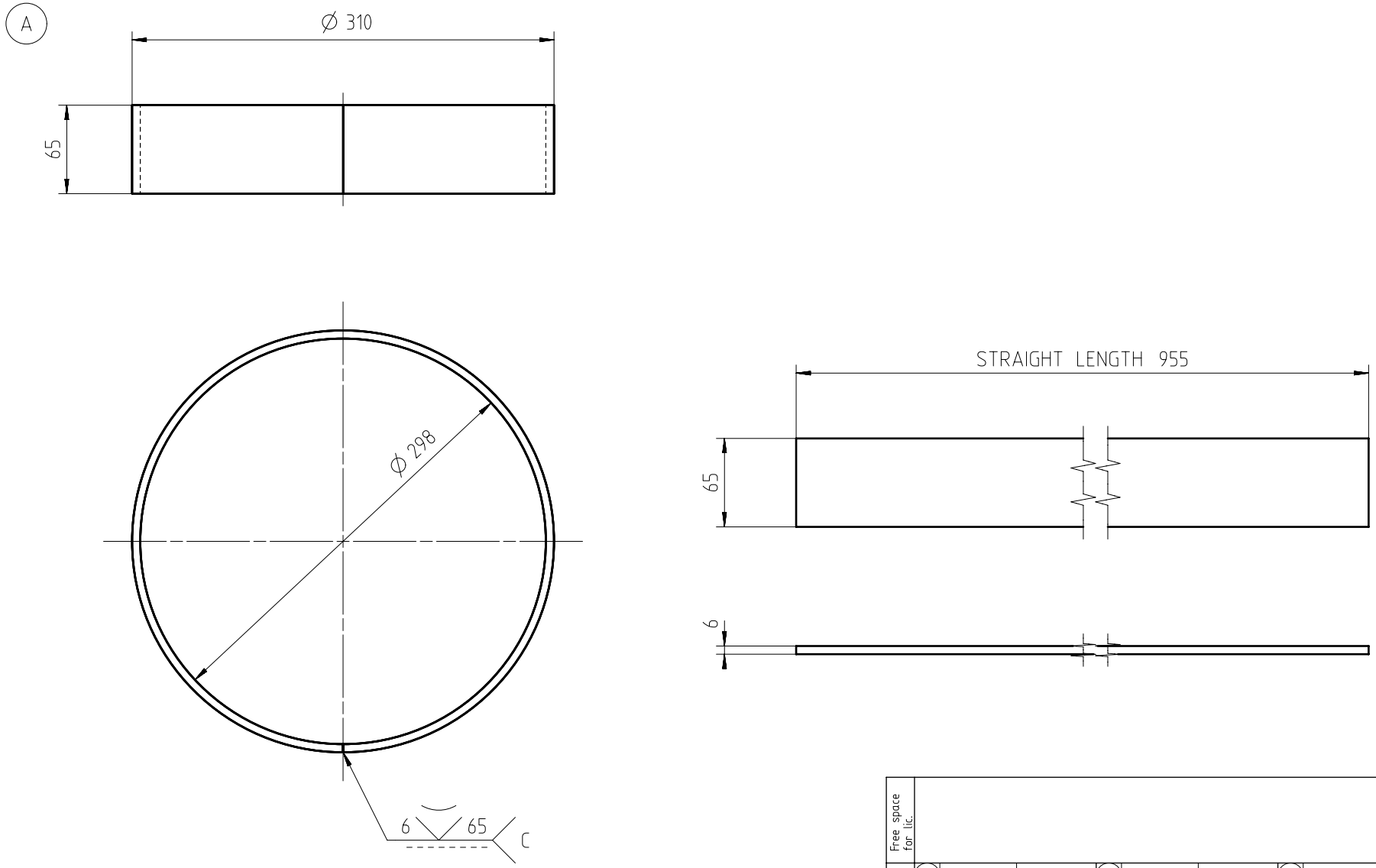

Free space for lic.									Q-Code XXXXX		Main Drw.
									Standard ISO; JIS		
Modif.	A	EAAD091530	18.02.2020								
		Number	Drawn date	Number	Drawn date	Number	Drawn date	Number	Drawn date		

WIN GD Winterthur Gas & Diesel

Product W-2S

RING

Ring

Units mm kg	NX		Basic Material W-FU-235-JR			Net Weight 5,8
SURFACE PROTECTION SEE GROUP 0344	Made	19.01.2011 mhu019 M.Hug	Scale 1:3	Size A3	Page 1/1	Material ID PAAD031021
TOLERANCING PRINCIPLE ISO8015	Chkd	31.01.2011 sfe006 Feuerstein	Design Group 9722	Drawing ID DAAD013645		Rev. A
GENERAL TOLERANCES ACCORDING TO ISO2768-mK	Appd	31.01.2011 dst009 Strödecke				

Approved

DID - DIMENSIONAL DRAWING - Confidential

Copyright Winterthur Gas & Diesel Ltd. All rights reserved. By taking possession of the drawing the recipient recognizes and honours these rights. Neither the whole nor any part of this drawing may be used in any way for construction, fabrication, marketing or any other purpose nor copied in any way nor made accessible to third parties without the previous written consent of Winterthur Gas & Diesel Ltd.

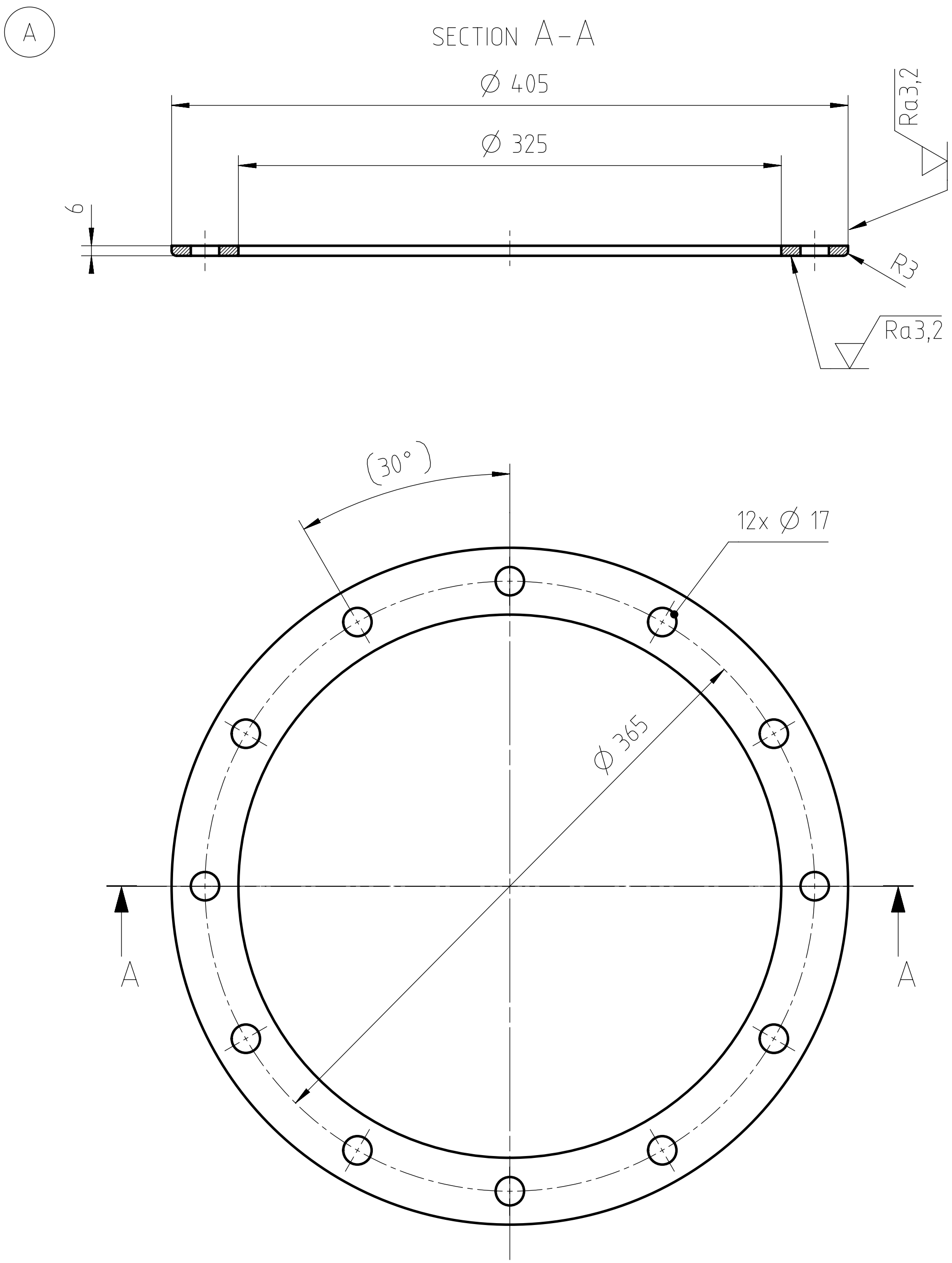

Ra12,5 (✓)

SHARP EDGES REMOVED

Free space for lic.								Q-Code: XXXXX Standard: ISO; JIS	Main Drw.
Modif.	A	EAAD091530 (Number)	17.02.2020 (Drawn date)	Number	Drawn date	Number	Drawn date	Number	Drawn date

WIN GD Winterthur Gas & Diesel	Product: W-2S	RING Ring

Units: mm kg	NX		Basic Material: W-FU-235-JR			Net Weight: 2,4
Made: 21.01.2011	mhu019 M.Hug		Scale: 1:3	Size: A3	Page: 1/1	Material ID: PAAD030945
Chkd: 31.01.2011	sfe006 Feuerstein		Design Group: 9722	Drawing ID: DAAD013763		Rev.: A
Appd: 31.01.2011	dst009 Strödecke					

SURFACE PROTECTION SEE GROUP 0344

TOLERANCING PRINCIPLE ISO8015

GENERAL TOLERANCES ACCORDING TO ISO2768-mK

Approved

DID - DIMENSIONAL DRAWING - Confidential

Copyright Winterthur Gas & Diesel Ltd. All rights reserved. By taking possession of the drawing the recipient recognizes and honours these rights. Neither the whole nor any part of this drawing may be used in any way for construction, fabrication, marketing or any other purpose nor copied in any way nor made accessible to third parties without the previous written consent of Winterthur Gas & Diesel Ltd.

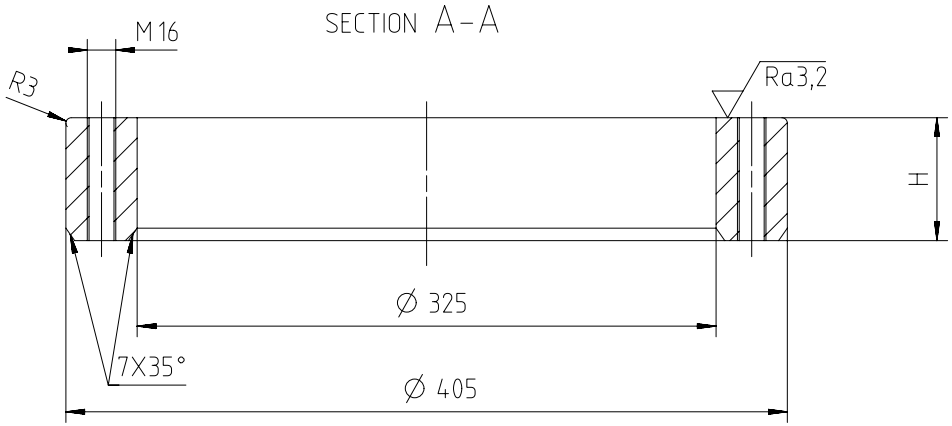

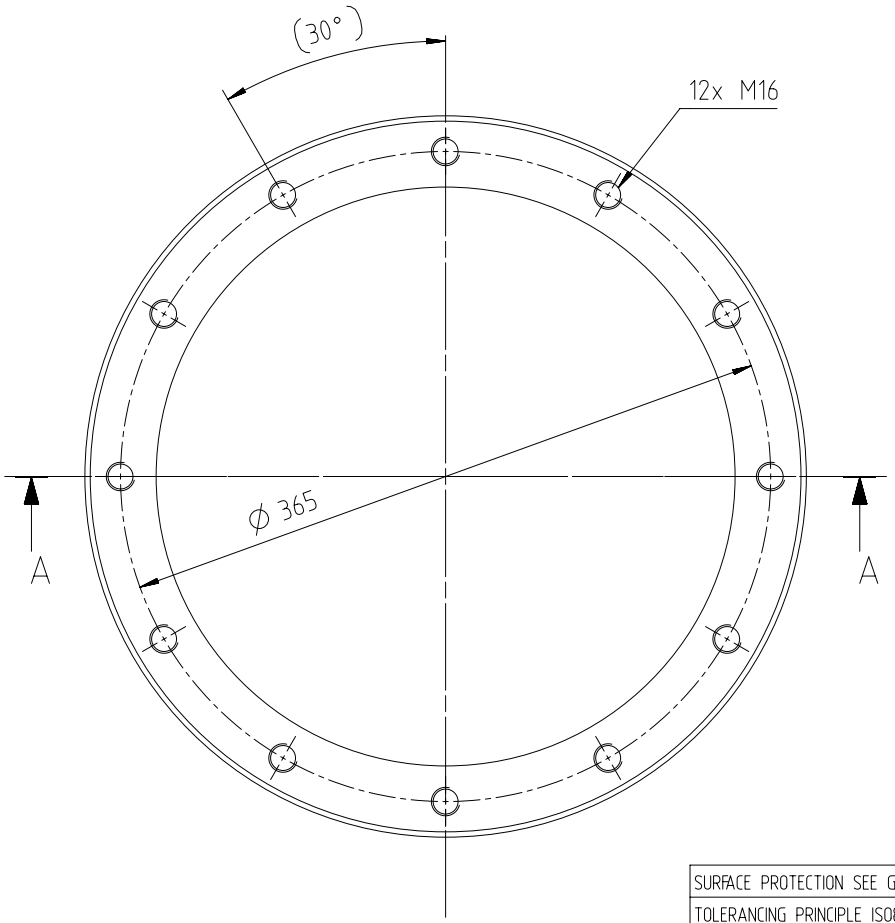

Ra12,5 (✓) SHARP EDGES REMOVED

H depends on chock thickness.

(A) H = A - 25 mm
for the relation of A, see Drawing DAAD013785

Free space for lic.									Q-Code XXXXX		Main Drw.
									Standard ISO; JIS		
Modif.	A	EAAD091530	15.11.2019								
		Number	Drawn date	Number	Drawn date	Number	Drawn date	Number	Drawn date		

WIN GD Winterthur Gas & Diesel

Product W-2S

WELDING FLANGE

Anschweissflansch

Units mm kg	NX	Basic Material W-FU-235-J0				Net Weight 23.5
Made	21.01.2011 mhu019 M.Hug	Scale 1:3	Size A3	Page 1/1	Material ID PAAD030948	
Chkd	31.01.2011 sfe006 Feuerstein	Design Group 9722	Drawing ID DAAD013739			Rev. A
Appd	31.01.2011 dst009 Strödecke					

SURFACE PROTECTION SEE GROUP 0344
TOLERANCING PRINCIPLE ISO8015
GENERAL TOLERANCES ACCORDING TO ISO2768-mK

Approved

DID - DIMENSIONAL DRAWING - Confidential

Copyright Winterthur Gas & Diesel Ltd. All rights reserved. By taking possession of the drawing the recipient recognizes and honours these rights. Neither the whole nor any part of this drawing may be used in any way for construction, fabrication, marketing or any other purpose nor copied in any way nor made accessible to third parties without the previous written consent of Winterthur Gas & Diesel Ltd.

A

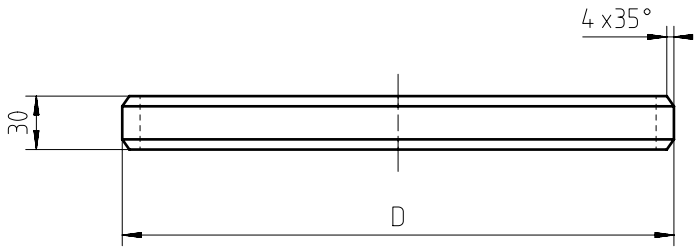

Parameter D and d related to inner pipe diameter (DN300) inside of drain tank

D = Pipe diameter inside

d = D - 20 mm

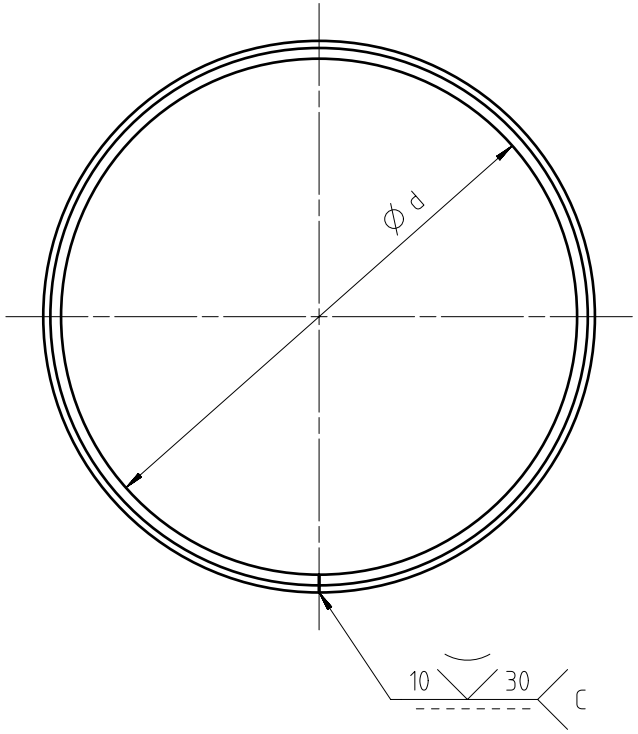

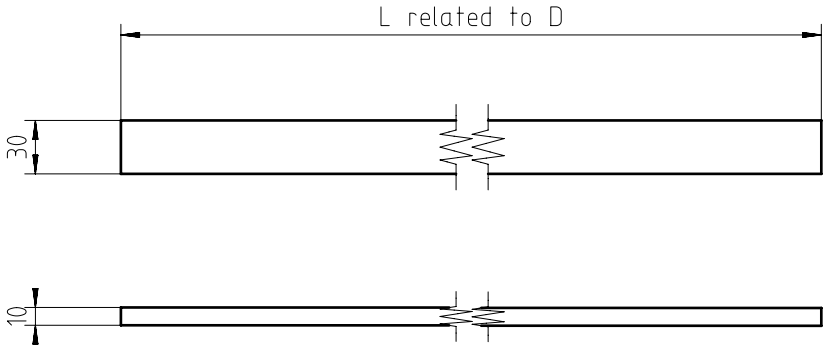

Free space for lic.									Q-Code XXXXX		Main Drw.
									Standard ISO; JIS		
Modif.	A	EAAD091530	18.02.2020								
		Number	Drawn date	Number	Drawn date	Number	Drawn date	Number	Drawn date		

WIN GD Winterthur Gas & Diesel

Product W-2S

RING

Ring

Units mm kg	NX		Basic Material W-FU-235-JR				Net Weight 4,3
SURFACE PROTECTION SEE GROUP 0344	Made	27.01.2011 mhu019 M.Hug	Scale 1:3	Size A3	Page 1/1	Material ID PAAD031395	
TOLERANCING PRINCIPLE ISO8015	Chkd	31.01.2011 sfe006 Feuerstein	Design Group 9722	Drawing ID DAAD013903			Rev. A
GENERAL TOLERANCES ACCORDING TO ISO2768-mK	Appd	31.01.2011 dst009 Strödecke					

Approved

DID - DIMENSIONAL DRAWING - Confidential

Copyright Winterthur Gas & Diesel Ltd. All rights reserved. By taking possession of the drawing the recipient recognizes and honours these rights. Neither the whole nor any part of this drawing may be used in any way for construction, fabrication, marketing or any other purpose nor copied in any way nor made accessible to third parties without the previous written consent of Winterthur Gas & Diesel Ltd.

Specifications that need to be met:

W-X35/-B

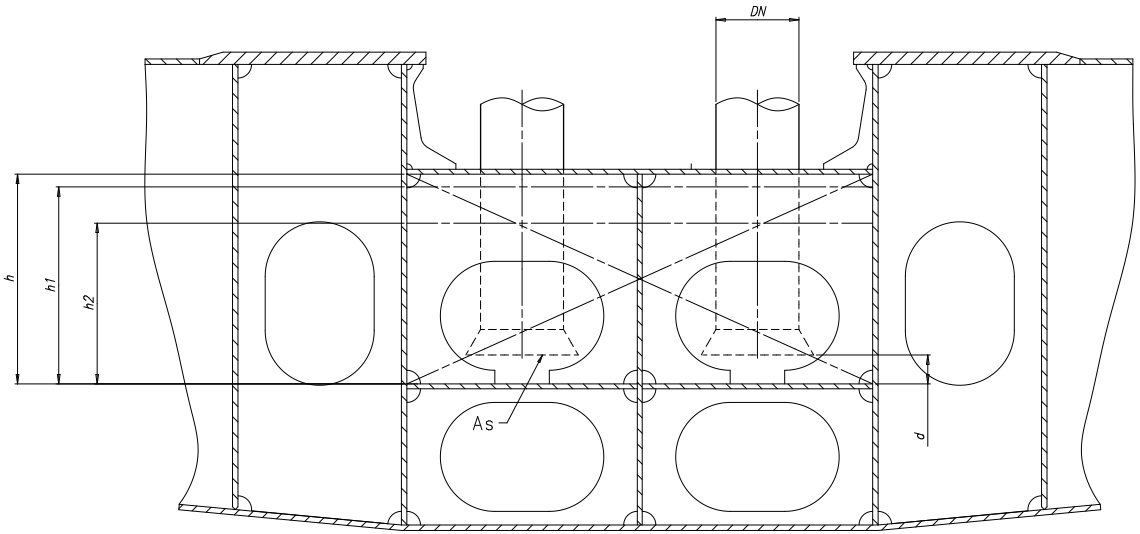

Dimensioning guidelines and capacities for tank design

	No. of cylinders			5	6	7	8
(D)	h	Recommended total tank height	(mm)	according to installation requirements			
		Recommended total tank volume: 105% *4)	(m3)	6	6	7	7
(D)	h1	Recommended filling level	(mm)	according to installation requirements			
		Recommended volume: 100% *4)	(m3)	5	6	6	7
	h2	Low-level alarm	(mm)	*2)			
		Volume	(m3)				
(D)	Vr	Min. retention volume *5)	(m3)	4	5	5	5
	d	Distance between suction pipe and bottom of tank	(mm)	*3)			
	As	Suction area		min. 1.5 x suction pipe area (DN)			

REMARKS:

*1) Level after filling of external system. Volume and level in the LO drain tank depend on capacity of pipes, coolers, filters, etc. The oil volume in tank contains a part of the oil quantity, which drains back when the pumps are stopped.

*2) The low-level alarm (h2) has to be positioned in such a way that a proper pump suction is ensured under the conditions defined by the classification societies.

Minimum inclination angles comply with the rules of classification societies:

Heel to each side	15°
Rolling to each side	±22.5
Trim	500/L, max. 5° L: ship length in meter Example L = 250 m Trim = 500/250 = 2°
Pitching	± 7.5°

Additionally this level has to be above or equal to the minimum retention volume (Vr) for M/E operation.

*3) Distance (d) between suction pipe inlet of main LO pumps and LO drain tank bottom has to be in accordance with the requirements of the pump manufacturer. As guideline the following formula can be applied: d = DN/4 + 40, d = min. 80 mm.

(D) *4) The stated tank volume represent the min. requirement. Final tank dimensions have to be aligned in regard to dimensional restricions by ship and engine structure and the pump suction requirement.

(D) *5) To be maintained during engine operation (LO pump suction without LO drain back-flow (emergency case) is ensured for at least 3 minutes).

LO DRAIN TANK - FILLING PROCESS

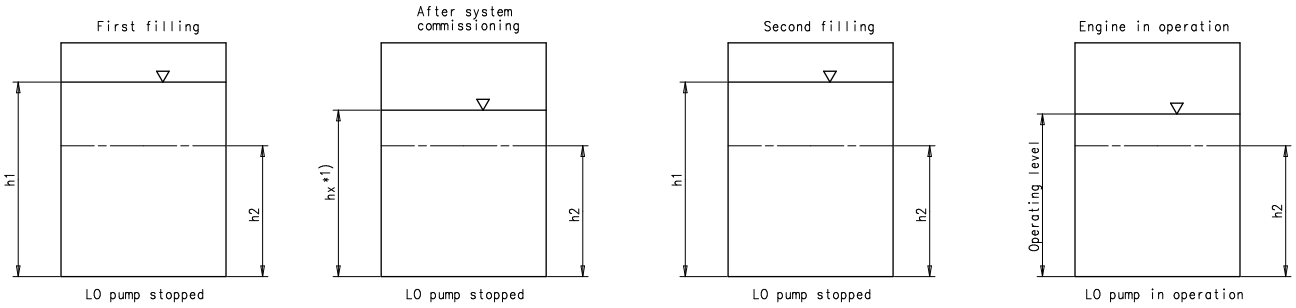

Modif.	Number	Drawn date	Number	Drawn date	Number	Drawn date	Number	Drawn date
	A EAAD083145	25.07.2011	B EAAD086020	15.07.2015	C EAAD086282	16.11.2015	D EAAD086531	23.03.2016

Free space for lic.

Q-Code XXXXX | Standard ISO JIS | Main Dra.

WIN GD Winterthur Gas & Diesel

Product W-35

LUBRICATING OIL DRAIN TANK
FILLING GUIDELINE

Units mm kg | IDE | Basic Material | Net Weight 0.001

SURFACE PROTECTION SEE GROUP 0344	Made	23.12.2010 wwr001 W.Wroblewski	Scale 1:25	Size A1	Page 1/1	Material ID PAAD028663	
TOLERANCING PRINCIPLE ISO8015	Chkd	19.01.2011 mhu019 Hug	Design Group 9722				
GENERAL TOLERANCES ACCORDING TO ISO2768-mK	Appd	19.01.2011 dst009 Strödecke		Drawing ID DAAD012772			Rev. D

Approved

RD - PRODUCTION DRAWING - Confidential

Copyright Winterthur Gas & Diesel Ltd. All rights reserved. By taking possession of the drawing the recipient recognizes and honours these rights. Neither the whole nor any part of this drawing may be used in any way for construction, fabrication, marketing or any other purpose nor copied in any way nor made accessible to third parties without the previous written consent of Winterthur Gas & Diesel Ltd.

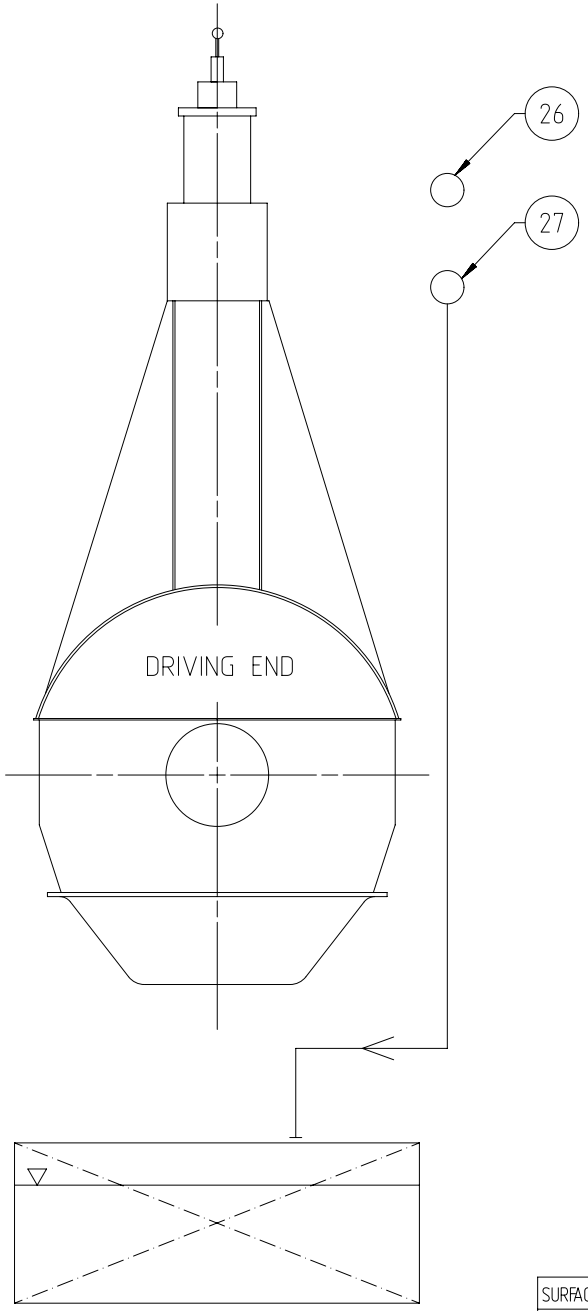

SPECIFICATION which must be met

26 INLET - Turbocharger lubricating oil

- Lubricating oil temperature:
  - ABB: 30 ~ 85 °C
  - MHI: 35 ~ 50 °C
- Lubricating oil pressure
  - ABB: 0.8 ~ 2.5 bar
  - MHI: 0.6 ~ 1.5 bar
- Lubricating oil volume flow: according to the turbocharger maker's recommendation
- Lubricating oil cleanliness:
  - Full flow filtered by a 50 micron (absolute sphere passing mesh) automatic self-cleaning filter
  - Offline cleaning of the oil return (including back-flushing oil)

27 OUTLET - Turbocharger lubricating oil

- Oil return to lubricating oil drain tank
- Oil return pipe must not be connected to other drain pipes.
- Oil outlet must be above the max. oil level in the tank or as an alternative a drain pipe with venting holes above the max. oil level needs to be installed.

Prod.	CX40DF CX52	RT-flex48T-D RT-flex50-B	RT-flex50-D RT-flex50DF	RT-flex58T-B RT-flex58T-D	RT-flex58T-D V1 RT-flex58T-D V2	RT-flex58T-ES RT-flex58TD ER-3	CR-HHM-PILOT X35-B	X40-B [...]

Change History

Rev.	Creator	Approver	Approval Date	Change ID	Change Synopsis	Approved	Activity Code	E	C
B	dki021	mhu019	21.01.2022	CNAA001108	see ChangeNotice			4	3
A	dki021	mhu019	08.09.2020	EAAD091530	Legacy information. See corresponding ChangeNotice			4	-
-	dki021	bha009	16.12.2016		-			-	-

WIN GD Winterthur Gas & Diesel

LUBRICATING OIL SYSTEM
FOR SEPARATED TC LUBRICATING

Dimension					
Scale -	NX	Units [mm] [kg]	Basic Material		Net Weight 0.000
Main Design		Design Group 9722	Q-Code XXXXX		Standard WDS
Qty per		A3	Item ID PAAD245338		Drawing Page/s 1/5

SURFACE PROTECTION SEE GROUP 0344
TOLERANCING PRINCIPLE ISO8015
GENERAL TOLERANCES ACCORDING TO ISO2768-mK

Copyright Winterthur Gas & Diesel Ltd. All rights reserved. By taking possession of the drawing the recipient recognizes and honours these rights. Neither the whole nor any part of this drawing may be used in any way for construction, fabrication, marketing or any other purpose nor copied in any way nor made accessible to third parties without the previous written consent of Winterthur Gas & Diesel Ltd.

Pos.	Description
001	ABB-Turbocharger
002	Lubricating oil drain tank
003	Heating coil
004	Suction filter
005	Lubricating oil pump
006	Lubricating oil cooler
007	Automatic temperature control valve
008	Lubricating oil filter *6)
009	Pressure regulating valve
26	INLET - Turbocharger lubricating oil *5)
27	OUTLET - Turbocharger lubricating oil *5) *7)

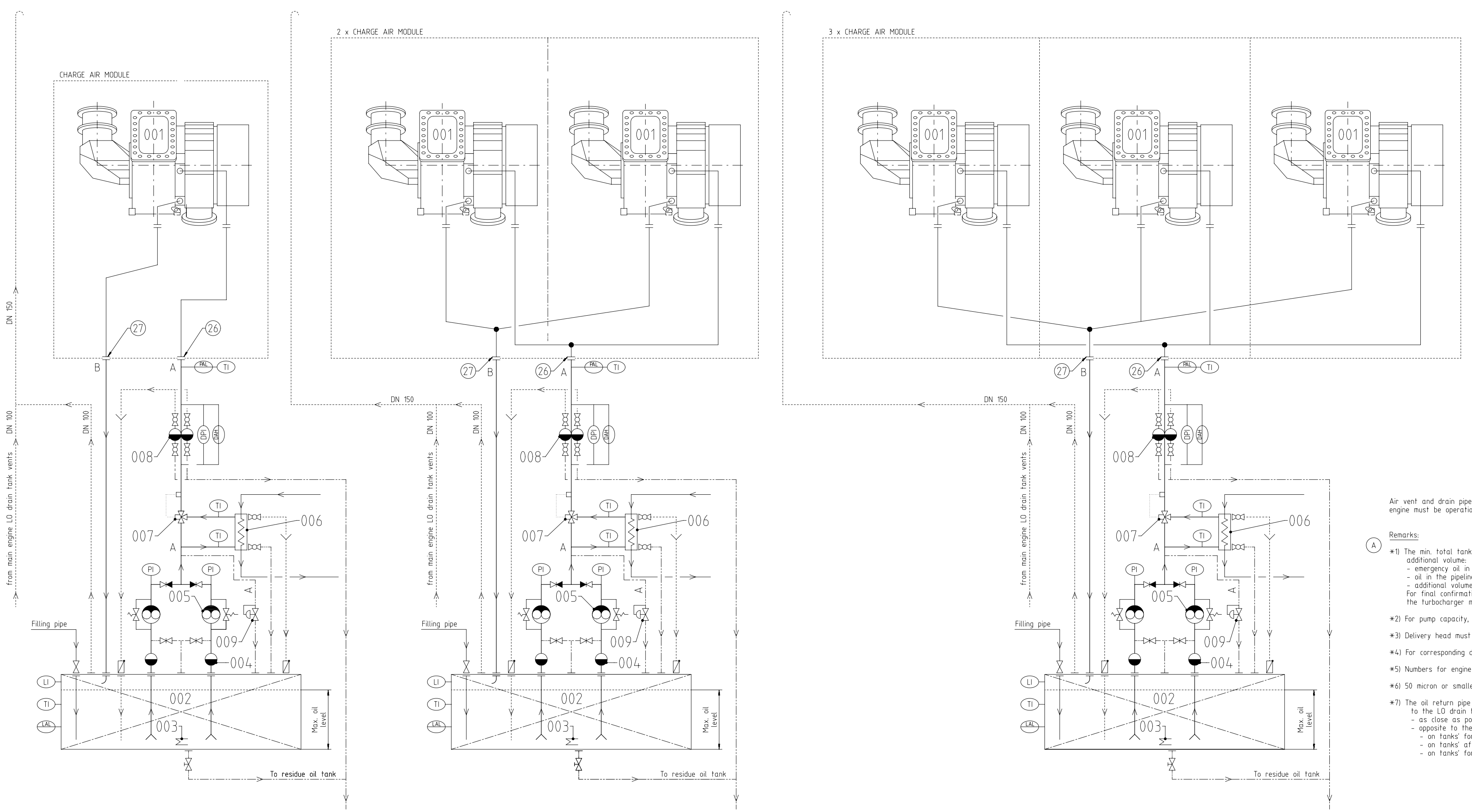

Air vent and drain pipes must be fully functional at all inclination angles of the ship at which the engine must be operational.

Remarks:

(A)

*1) The min. total tank capacity must consider the min. retention volume, plus the following additional volume:
- emergency oil in the integrated head tank
- oil in the pipeline which drains back, when pump is stopped
- additional volume for air

For final confirmation of the min. total tank capacity, please contact the turbocharger manufacturer.

*2) For pump capacity, temperature and oil viscosity, please refer to the GTD program.

*3) Delivery head must be according to the actual piping layout.

*4) For corresponding data, please refer to manufacturer of turbocharger.

*5) Numbers for engine pipe connections, please refer to the pipe connection plan for specific engine.

*6) 50 micron or smaller (absolute, sphere passing mesh).

*7) The oil return pipe must not be connected to other drain pipes. If the oil is returned to the LO drain tank it is recommended to connect the oil outlet
- as close as possible to the separator suction pipe
- opposite to the main LO pump, i.e.
  - on tanks' forward end if the main LO pump is on tanks' aft end
  - on tanks' aft end if the main LO pump is on tanks' forward end
  - on tanks' forward or aft end if the main LO pump is in the middle of the tank.

1 SET OF TURBOCHARGER				A165-L / A265-L	A170-L / A270-L	A175-L / A275-L	A180-L / A280-L	A185-L / A285-L	A190-L
LO tank	min. retention volume		m³	*4)					
	min. total tank capacity		m³	*1)					
LO pump *2)	capacity		m³	Refer to GTD					
	capacity		l/min						
	delivery *3)		bar	4.0					
Nominal pipe diameter		A	DN	32	32	32	40	40	40
		B	DN	65	65	65	80	80	80
		C	DN	65	65	65	80	80	80

2 SETS OF TURBOCHARGERS				A165-L / A265-L	A170-L / A270-L	A175-L / A275-L	A180-L / A280-L	A185-L / A285-L	A190-L
LO tank	min. retention volume		m³	*4)					
	min. total tank capacity		m³	*1)					
LO pump *2)	capacity		m³	Refer to GTD					
	capacity		l/min						
	delivery *3)		bar	4.0					
Nominal pipe diameter		A	DN	40	50	50	50	65	65
		B	DN	80	100	100	100	125	125
		C	DN	80	100	100	100	125	125

(A)

3 SETS OF TURBOCHARGERS				A175-L / A275-L	A180-L / A280-L	A185-L / A285-L	A190-L
LO tank	min. retention volume		m³	*4)			
	min. total tank capacity		m³	*1)			
LO pump *2)	capacity		m³	Refer to GTD			
	capacity		l/min				
	delivery *3)		bar	4.0			
Nominal pipe diameter		A	DN	65	65	65	80
		B	DN	125	125	150	150
		C	DN	125	125	150	150

- Bearing LO pipes
- Transfer/dirty LO pipes
- Overflow/drain pipes
- Air vent pipes
- Pipe connections
- Pipes on engine

SURFACE PROTECTION SEE GROUP 0344
TOLERANCING PRINCIPLE ISO8015
GENERAL TOLERANCES ACCORDING TO ISO2768-mK

Product: [...] X40DF-1.0 X52 X52-S2.0 X52DF X52DF-S1.0 X62 X62-B X62-S2.0 X62DF X62DF-1.1 X62DF-2.1 X62DF-S1.0 X62DF-S2.0 X72 X72-B X72DF X72DF-1.1 X72DF-1.2 X72DF-2.1 X72DF-2.2 X82-2.0 X82-B X82DF-1.0 X82DF-2.0 X92 X92-B X92DF X92DF-2.0

Change	Rev.	Creator	Approver	Approval Date	Change ID	Change Synopsis	Approved	Activity Code		
	B	dki021	mhu019	21.01.2022	CNAA001108	see ChangeNotice			4	3
									E	C

Copyright Winterthur Gas & Diesel Ltd. All rights reserved. By taking possession of the drawing the recipient recognizes and honours these rights. Neither the whole nor any part of this drawing may be used in any way for construction, fabrication, marketing or any other purpose nor copied in any way nor made accessible to third parties without the previous written consent of Winterthur Gas & Diesel Ltd.

[mm] [kg] - NX A0 Item ID PAAD245338 Drawing Page/s 2/5

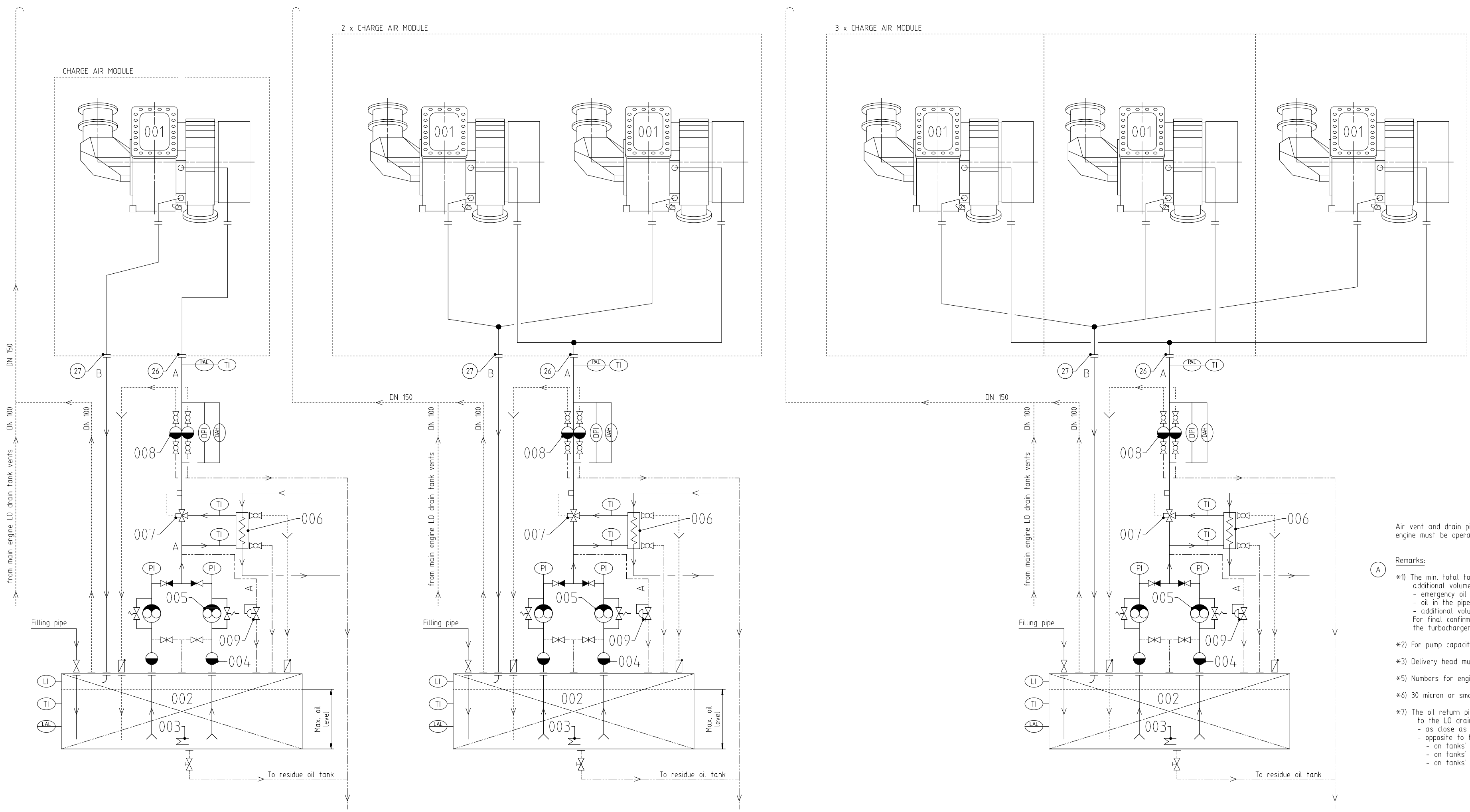

Pos.	Description
001	MHI-Turbocharger (MET-MA)
002	Lubricating oil drain tank
003	Heating coil
004	Suction filter
005	Lubricating oil pump
006	Lubricating oil cooler
007	Automatic temperature control valve
008	Lubricating oil filter *6)
009	Pressure regulating valve
26	INLET - Turbocharger lubricating oil *5)
27	OUTLET - Turbocharger lubricating oil *5) *7)

Air vent and drain pipes must be fully functional at all inclination angles of the ship at which the engine must be operational.

(A) Remarks:

*1) The min. total tank capacity must consider the min. retention volume, plus the following additional volume:
- emergency oil in the integrated head tank
- oil in the pipeline which drains back, when pump is stopped
- additional volume for air

For final confirmation of the min. total tank capacity, please contact the turbocharger manufacturer.

*2) For pump capacity, temperature and oil viscosity, please refer to the GTD program.

*3) Delivery head must be according to the actual piping layout.

*5) Numbers for engine pipe connections, please refer to the pipe connection plan for specific engine.

*6) 30 micron or smaller (absolute, sphere passing mesh).

*7) The oil return pipe must not be connected to other drain pipes. If the oil is returned to the LO drain tank it is recommended to connect the oil outlet
- as close as possible to the separator suction pipe
- opposite to the main LO pump, i.e.
  - on tanks' forward end if the main LO pump is on tanks' aft end
  - on tanks' aft end if the main LO pump is on tanks' forward end
  - on tanks' forward or aft end if the main LO pump is in the middle of the tank.

(A)

1 SET OF TURBOCHARGER			MET33MA	MET42MA	MET53MA	MET60MA	MET66MA	MET71MA	MET83MA	MET90MA
LO tank	min. retention volume	m³	0.18	0.27	0.43	0.53	0.67	0.88	1.07	1.30
	min. total tank capacity	m³	*1)							
LO pump *2)	capacity	m³	Refer to GTD							
	capacity	l/min								
	delivery *3)	bar	4.0							
Nominal pipe diameter	A	DN	25	32	40	50	50	50	50	65
	B	DN	40	50	65	80	80	100	100	125
	C	DN	40	50	65	80	80	80	100	100

(A)

2 SETS OF TURBOCHARGERS			MET33MA	MET42MA	MET53MA	MET60MA	MET66MA	MET71MA	MET83MA	MET90MA
LO tank	min. retention volume	m³	0.36	0.54	0.86	1.06	1.33	1.76	2.14	2.60
	min. total tank capacity	m³	*1)							
LO pump *2)	capacity	m³	Refer to GTD							
	capacity	l/min								
	delivery *3)	bar	4.0							
Nominal pipe diameter	A	DN	32	40	50	65	65	65	80	100
	B	DN	100	125	125	150	150	200	200	200
	C	DN	50	65	80	100	100	100	125	125

(A)

3 SETS OF TURBOCHARGERS			MET53MA	MET60MA	MET66MA	MET71MA	MET83MA	MET90MA
LO tank	min. retention volume	m³	1.29	1.59	2.00	2.64	3.21	3.90
	min. total tank capacity	m³	*1)					
LO pump *2)	capacity	m³	Refer to GTD					
	capacity	l/min						
	delivery *3)	bar	4.0					
Nominal pipe diameter	A	DN	65	80	80	80	100	100
	B	DN	150	200	200	250	250	250
	C	DN	100	125	125	125	150	150

Bearing LO pipes
Transfer/dirty LO pipes
Overflow/drain pipes
Air vent pipes
Pipe connections
Pipes on engine

SURFACE PROTECTION SEE GROUP 0344
TOLERANCING PRINCIPLE ISO8015
GENERAL TOLERANCES ACCORDING TO ISO2768-mK

Change	Rev.	Creator	Approver	Approval Date	Change ID	Change Synopsis	Activity Code		
	B	dki021	mhu019	21.01.2022	CNAA001108	see ChangeNotice		4	3
						Approved		E	C

Copyright Winterthur Gas & Diesel Ltd. All rights reserved. By taking possession of the drawing the recipient recognizes and honours these rights. Neither the whole nor any part of this drawing may be used in any way for construction, fabrication, marketing or any other purpose nor copied in any way nor made accessible to third parties without the previous written consent of Winterthur Gas & Diesel Ltd.

[mm] [kg] - NX A0 Item ID PAAD245338 Drawing Page/s 3/5

Pos.	Description
001	MHI-Turbocharger (MET-MB)
002	Lubricating oil drain tank
003	Heating coil
004	Suction filter
005	Lubricating oil pump
006	Lubricating oil cooler
007	Automatic temperature control valve
008	Lubricating oil filter *6)
009	Pressure regulating valve
(26)	INLET - Turbocharger lubricating oil *5)
(27)	OUTLET - Turbocharger lubricating oil *5) *7)

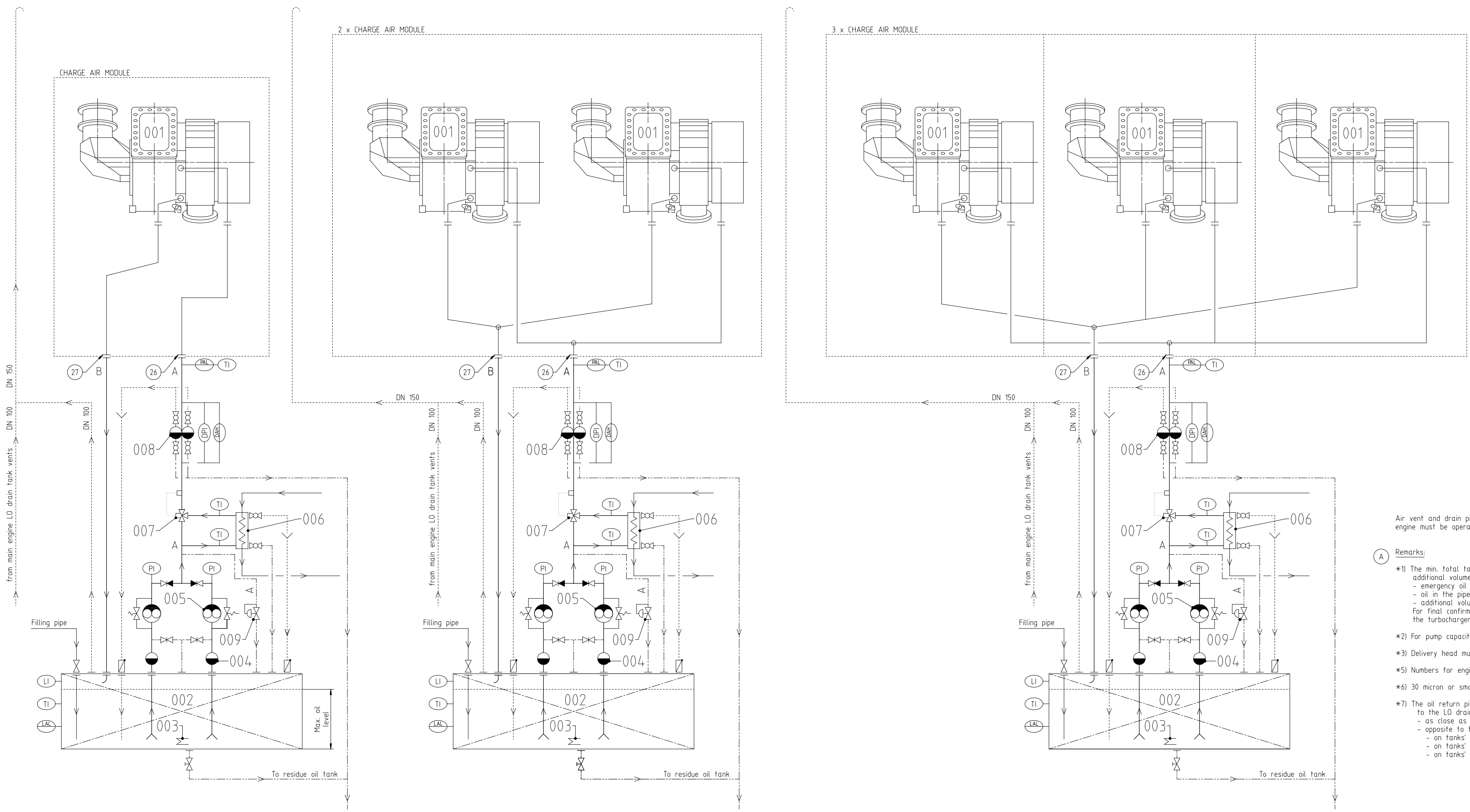

Air vent and drain pipes must be fully functional at all inclination angles of the ship at which the engine must be operational.

(A) Remarks:

*1) The min. total tank capacity must consider the min. retention volume, plus the following additional volume:
- emergency oil in the integrated head tank
- oil in the pipeline which drains back, when pump is stopped
- additional volume for air

For final confirmation of the min. total tank capacity, please contact the turbocharger manufacturer.

*2) For pump capacity, temperature and oil viscosity, please refer to the GTD program.

*3) Delivery head must be according to the actual piping layout.

*5) Numbers for engine pipe connections, please refer to the pipe connection plan for specific engine.

*6) 30 micron or smaller (absolute, sphere passing mesh).

*7) The oil return pipe must not be connected to other drain pipes. If the oil is returned to the LO drain tank it is recommended to connect the oil outlet
- as close as possible to the separator suction pipe
- opposite to the main LO pump, i.e.
  - on tanks' forward end if the main LO pump is on tanks' aft end
  - on tanks' aft end if the main LO pump is on tanks' forward end
  - on tanks' forward or aft end if the main LO pump is in the middle of the tank.

(A)

1 SET OF TURBOCHARGER			MET33MB	MET37MB	MET42MB	MET48MB	MET53MB	MET60MB	MET66MB	MET71MB	MET83MB	MET90MB
LO tank	min. retention volume	m^3	0.21	0.26	0.31	0.41	0.49	0.61	0.77	1.01	1.23	1.50
	min. total tank capacity	m^3	*1)									
LO pump *2)	capacity	m^3	Refer to GTD									
	capacity	l/min										
	delivery *3)	bar	4.0									
Nominal pipe diameter	A	DN	20	25	25	32	32	32	32	32	40	50
	B	DN	40	50	50	65	65	80	80	100	100	125
	C	DN	40	50	50	65	65	80	80	80	100	100

(A)

2 SETS OF TURBOCHARGERS			MET33MB	MET37MB	MET42MB	MET48MB	MET53MB	MET60MB	MET66MB	MET71MB	MET83MB	MET90MB
LO tank	min. retention volume	m^3	0.41	0.52	0.62	0.82	0.99	1.22	1.53	2.02	2.46	2.99
	min. total tank capacity	m^3	*1)									
LO pump *2)	capacity	m^3	Refer to GTD									
	capacity	l/min										
	delivery *3)	bar	4.0									
Nominal pipe diameter	A	DN	32	40	40	40	50	50	50	50	65	80
	B	DN	80	100	100	125	125	125	150	200	200	200
	C	DN	50	65	65	80	80	100	100	100	125	125

(A)

3 SETS OF TURBOCHARGERS			MET53MB	MET60MB	MET66MB	MET71MB	MET83MB	MET90MB
LO tank	min. retention volume	m^3	0.41	0.52	0.62	0.82	0.99	1.22
	min. total tank capacity	m^3	*1)					
LO pump *2)	capacity	m^3	Refer to GTD					
	capacity	l/min						
	delivery *3)	bar	4.0					
Nominal pipe diameter	A	DN	65	65	65	65	80	100
	B	DN	150	150	200	200	250	250
	C	DN	100	125	125	125	150	150

Bearing LO pipes
Transfer/dirty LO pipes
Overflow/drain pipes
Air vent pipes
Pipe connections
Pipes on engine

SURFACE PROTECTION SEE GROUP 0344
TOLERANCING PRINCIPLE ISO8015
GENERAL TOLERANCES ACCORDING TO ISO2768-mK

Change	Rev.	Creator	Approver	Approval Date	Change ID	Change Synopsis		
	B	dki021	mhu019	21.01.2022	CNAA001108	see ChangeNotice	4	3
						Approved / Activity Code	E	C

Copyright Winterthur Gas & Diesel Ltd. All rights reserved. By taking possession of the drawing the recipient recognizes and honours these rights. Neither the whole nor any part of this drawing may be used in any way for construction, fabrication, marketing or any other purpose nor copied in any way nor made accessible to third parties without the previous written consent of Winterthur Gas & Diesel Ltd.

[mm] [kg] - NX A0 Item ID PAAD245338 Drawing Page/s 4/5

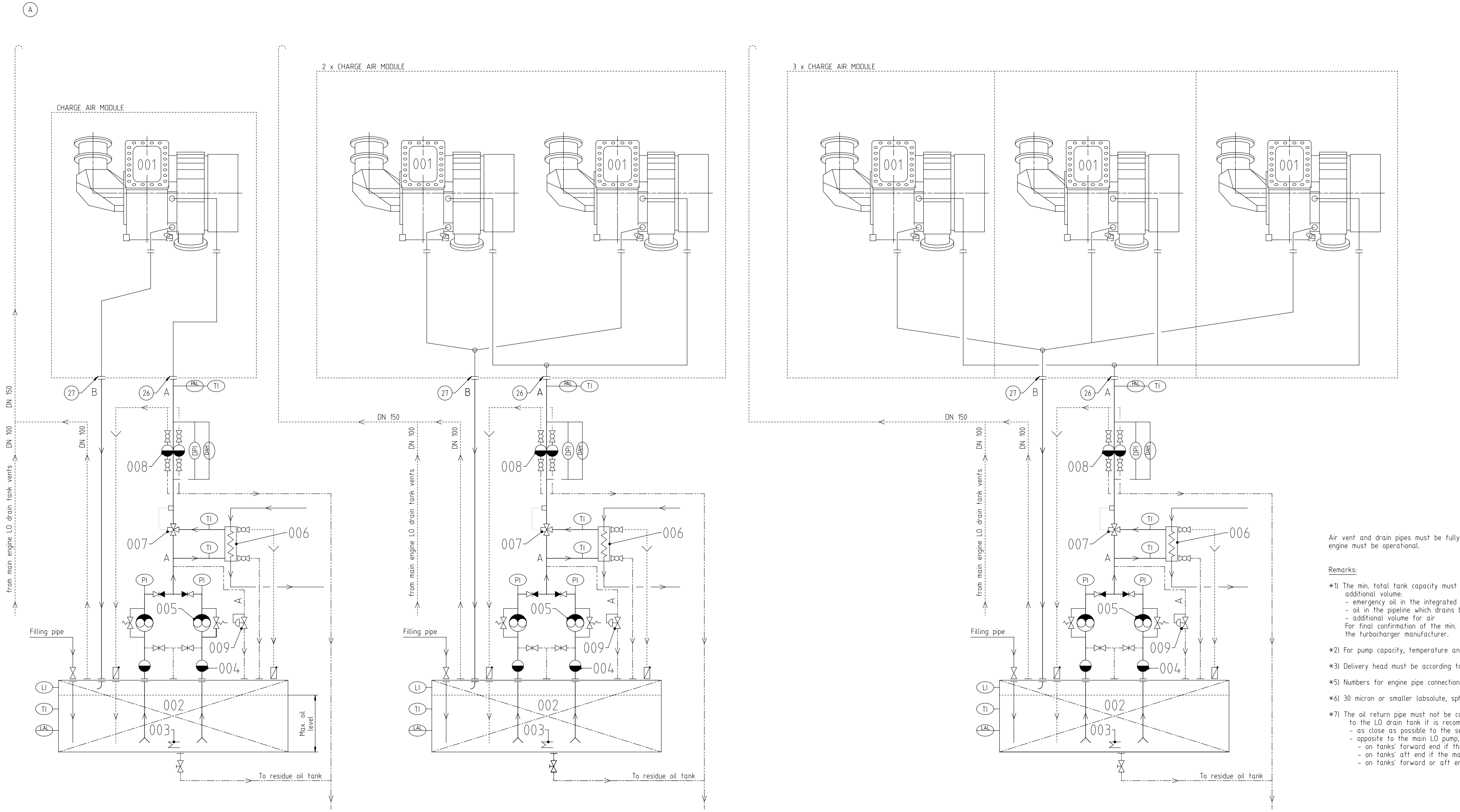

Pos.	Description
001	MHI-Turbocharger (MET-MBII)
002	Lubricating oil drain tank
003	Heating coil
004	Suction filter
005	Lubricating oil pump
006	Lubricating oil cooler
007	Automatic temperature control valve
008	Lubricating oil filter *6)
009	Pressure regulating valve
26	INLET - Turbocharger lubricating oil *5)
27	OUTLET - Turbocharger lubricating oil *5) *7)

Air vent and drain pipes must be fully functional at all inclination angles of the ship at which the engine must be operational.

Remarks:

*1) The min. total tank capacity must consider the min. retention volume, plus the following additional volume:
- emergency oil in the integrated head tank
- oil in the pipeline which drains back, when pump is stopped
- additional volume for air

For final confirmation of the min. total tank capacity, please contact the turbocharger manufacturer.

*2) For pump capacity, temperature and oil viscosity, please refer to the GTD program.

*3) Delivery head must be according to the actual piping layout.

*5) Numbers for engine pipe connections, please refer to the pipe connection plan for specific engine.

*6) 30 micron or smaller (absolute, sphere passing mesh).

*7) The oil return pipe must not be connected to other drain pipes. If the oil is returned to the LO drain tank it is recommended to connect the oil outlet
- as close as possible to the separator suction pipe
- opposite to the main LO pump, i.e.
  - on tanks' forward end if the main LO pump is on tanks' aft end
  - on tanks' aft end if the main LO pump is on tanks' forward end
  - on tanks' forward or aft end if the main LO pump is in the middle of the tank.

1 SET OF TURBOCHARGER			MET33MBII	MET37MBII	MET42MBII	MET48MBII	MET53MBII	MET60MBII	MET66MBII	MET71MBII	MET83MBII	MET90MBII
LO tank	min. retention volume	m³	0.27	0.34	0.42	0.53	0.67	0.82	1.04	1.22	1.67	2.02
	min. total tank capacity	m³	*1)									
LO pump *2)	capacity	m³	Refer to GTD									
	capacity	l/min										
	delivery *3)	bar	4.0									
Nominal pipe diameter	A	DN	20	25	25	32	32	32	32	32	40	50
	B	DN	40	50	50	65	65	80	80	100	100	125
	C	DN	40	50	50	65	65	80	80	80	100	100

2 SETS OF TURBOCHARGERS			MET33MBII	MET37MBII	MET42MBII	MET48MBII	MET53MBII	MET60MBII	MET66MBII	MET71MBII	MET83MBII	MET90MBII
LO tank	min. retention volume	m³	0.54	0.69	0.83	1.06	1.33	1.65	2.08	2.44	3.33	4.04
	min. total tank capacity	m³	*1)									
LO pump *2)	capacity	m³	Refer to GTD									
	capacity	l/min										
	delivery *3)	bar	4.0									
Nominal pipe diameter	A	DN	32	40	40	40	50	50	50	50	65	80
	B	DN	80	100	100	125	125	125	150	200	200	200
	C	DN	50	65	65	80	80	100	100	100	125	125

2 SETS OF TURBOCHARGERS			MET53MBII	MET60MBII	MET66MBII	MET71MBII	MET83MBII	MET90MBII
LO tank	min. retention volume	m³	2.00	2.47	3.13	3.66	5.00	6.06
	min. total tank capacity	m³	*1)					
LO pump *2)	capacity	m³	Refer to GTD					
	capacity	l/min						
	delivery *3)	bar	4.0					
Nominal pipe diameter	A	DN	65	65	65	65	80	100
	B	DN	150	150	200	200	250	250
	C	DN	100	125	125	125	150	150

- Bearing LO pipes
- Transfer/dirty LO pipes
- Overflow/drain pipes
- Air vent pipes
- Pipe connections
- Pipes on engine

SURFACE PROTECTION SEE GROUP 0344	Change	B	dki021	mhu019	21.01.2022	CNAA001108	see ChangeNotice	4	3
		Rev.	Creator	Approver	Approval Date	Change ID	Change Synopsis Approved	Activity Code E	C
TOLERANCING PRINCIPLE ISO8015					[mm] [kg]	-	A0	Item ID PAAD245338	Drawing Page/s 5/5
GENERAL TOLERANCES ACCORDING TO ISO2768-mK						NX			

Copyright Winterthur Gas & Diesel Ltd. All rights reserved. By taking possession of the drawing the recipient recognizes and honours these rights. Neither the whole nor any part of this drawing may be used in any way for construction, fabrication, marketing or any other purpose nor copied in any way nor made accessible to third parties without the previous written consent of Winterthur Gas & Diesel Ltd.

Self-Regulating Heating Cable 10QTVR2-CT

Order drawing

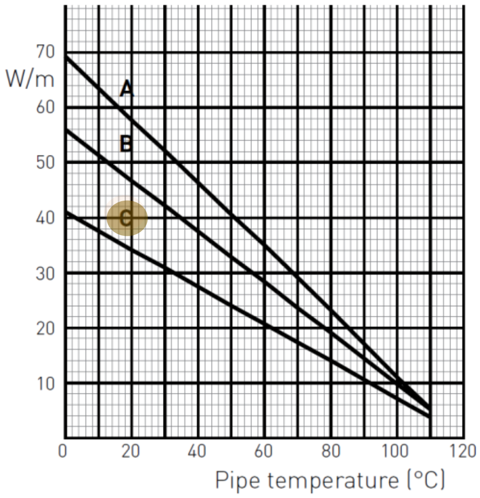

C 10QTVR2-CT

Heating cable construction

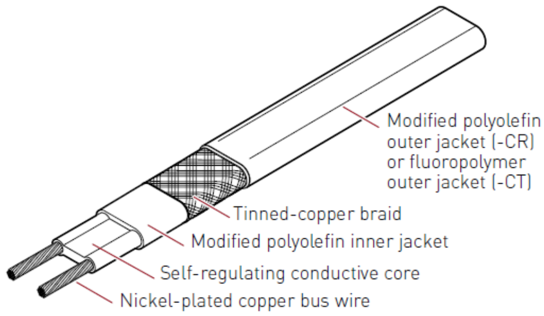

Specification:

Description:	10QTVR2-CT
Order No.:	391991-000
Area Classification:	Non-hazardous and hazardous locations
Traced surface type:	Metal and plastic
Chemical Resistance:	Exposure to aqueous inorganic chemicals: Use -CR (modified polyolefin outer jacket) Exposure to organic chemicals or corrosives: Use -CT (fluoropolymer outer jacket)
Supply Voltage:	200-277 VAC
Temperature Rating:	Maximum maintain or continuous exposure temperature (power on) 225°F (110°C) Maximum intermittent exposure temperature, 1000 hours (power on) 225°F (110°C) Minimum installation temperature –76°F (–60°C)
Minimum Bending Radius:	13 mm at 20°C 35 mm at -60°C
Height:	4.5 mm
Width:	11.8 mm
Weight:	0.126 kg/m

Supplier: PENTAIR
www.pentairthermal.com

MAXIMUM CIRCUIT LENGHT BASED ON TYPE 'C' CIRCUIT BREAKERS ACCORDING TO EN60898
SUPPLY VOLTAGE 230 VAC

Electrical protection sizing	Start-up temperature	Maximum heating cable length per circuit [m]
16A	-20°C	65
	+10°C	80
25A	-20°C	95
	+10°C	115
32A	-20°C	115
	+10°C	115
40A	-20°C	115
	+10°C	115

Substitute for:										PC	Q-Code	X	S	X X X
Modif	A	EAAD090454	05.03.2019											
		Number	Drawn Date		Number	Drawn Date		Number	Drawn Date		Number	Drawn Date		

WIN GD
Winterthur Gas & Diesel

Product
W-2S

Heating Element
Order Drawing

Made	24.10.2018	P. Kowalski	Main Drw.	Page 1 / 1
Chkd	24.10.2018	R. Leutwyler	Design Group	Material ID **PAAD308926**
Appd	24.10.2018	W. Östreicher	**0009**	Drawing ID **DAAD106761** Rev **A**

Copyright WinGD. All rights reserved. By taking possession of the drawing, the recipient recognizes and honors these rights. Neither the whole nor any part of this drawing may be used in any way for construction, fabrication, marketing or any other purpose nor copied in any way nor made accessible to third parties without the previous written consent of WinGD.

MIDS - WinGD X35-B – Lubricating Oil System (DG9722)

TRACK CHANGES

DATE	SUBJECT	DESCRIPTION
2017-02-17	DRAWING SET	First web upload
2018-05-22	DAAD075294 DAAD062788	System drgs – new revision
2019-05-22	DAAD022501 DAAD012918 DAAD014287 DAAD027452	Tank drgs- new revison
2019-09-26	DAAD062788	System drg – new revision
2020-09-21	DAAD075294 DAAD062788 DAAD013785 DAAD013764 DAAD013848 DAAD013964 DAAD013688 DAAD013657 DAAD013645 DAAD013763 DAAD013739 DAAD013903 DAAD083642 DAAD127677 DAAD127674 DAAD127672	System and tank assembly drgs – new revision
2021-05-19	107.246.799	Hydraulic jack plate positioning drawing – new revision
2022-07-12	PAAD181323 PAAD218389	System drgs. – new revisions
2023-01-05	PAAD181323 PAAD218389	System drgs. – new revisions

DISCLAIMER

© Copyright by Winterthur Gas & Diesel Ltd.
All rights reserved. No part of this document may be reproduced or copied in any form or by any means (electronic, mechanical, graphic, photocopying, recording, taping or other information retrieval systems) without the prior written permission of the copyright owner.

THIS PUBLICATION IS DESIGNED TO PROVIDE AN ACCURATE AND AUTHORITATIVE INFORMATION WITH REGARD TO THE SUBJECT-MATTER COVERED AS WAS AVAILABLE AT THE TIME OF PRINTING. HOWEVER, THE PUBLICATION DEALS WITH COMPLICATED TECHNICAL MATTERS SUITED ONLY FOR SPECIALISTS IN THE AREA, AND THE DESIGN OF THE SUBJECT-PRODUCTS IS SUBJECT TO REGULAR IMPROVEMENTS, MODIFICATIONS AND CHANGES. CONSEQUENTLY, THE PUBLISHER AND COPYRIGHT OWNER OF THIS PUBLICATION CAN NOT ACCEPT ANY RESPONSIBILITY OR LIABILITY FOR ANY EVENTUAL ERRORS OR OMISSIONS IN THIS BOOKLET OR FOR DISCREPANCIES ARISING FROM THE FEATURES OF ANY ACTUAL ITEM IN THE RESPECTIVE PRODUCT BEING DIFFERENT FROM THOSE SHOWN IN THIS PUBLICATION. THE PUBLISHER AND COPYRIGHT OWNER SHALL UNDER NO CIRCUMSTANCES BE HELD LIABLE FOR ANY FINANCIAL CONSEQUENTIAL DAMAGES OR OTHER LOSS, OR ANY OTHER DAMAGE OR INJURY, SUFFERED BY ANY PARTY MAKING USE OF THIS PUBLICATION OR THE INFORMATION CONTAINED HEREIN.