Date:	2021-07-22

Introduction of the automated Sequential TurboCharging (aSTC)

Engines: The WinGD X82-2.0 and X92-B

Contents

1 Introduction

Automated Sequential TurboCharging (aSTC) is being introduced as an option for the 9X82-2.0 and the X92-B engines equipped with three equal turbochargers. Cutting out one out of three turbochargers at part loads increases the engine efficiency. When the engine is operated in aSTC mode, one turbocharger is automatically cut out at lower engine power (between 40 - 60% CMCR engine power) resulting in fuel savings of up to 5 g/kWh.

The aSTC is a separate operating mode which gives the lowest possible fuel oil consumption at part loads. The higher fuel efficiency reduces the exhaust gas temperatures and the exhaust gas flow. The engine cannot be operated simultaneously in aSTC mode and Tier III (SCR) mode or Steam Production Control (SPC) mode. The 25% and 50% CMCR engine power points must be demonstrated with and without one turbocharger cut out, for the NO_x EIAPP certification on the parent engine as well as during Factory Acceptance Test of each engine. The crankshaft torsional vibration calculations should be performed for both cases, with and without aSTC activated.

The aSTC option is now available for new engine orders.

2 Engine performance data

Engine performance data for the X92-B and the 9X82-2.0 engines with three turbochargers became available in WinGD's "General Technical Data" (GTD) version 2.14.0.1.

Figure 2-1 shows an example of the savings in fuel oil consumption at part loads.

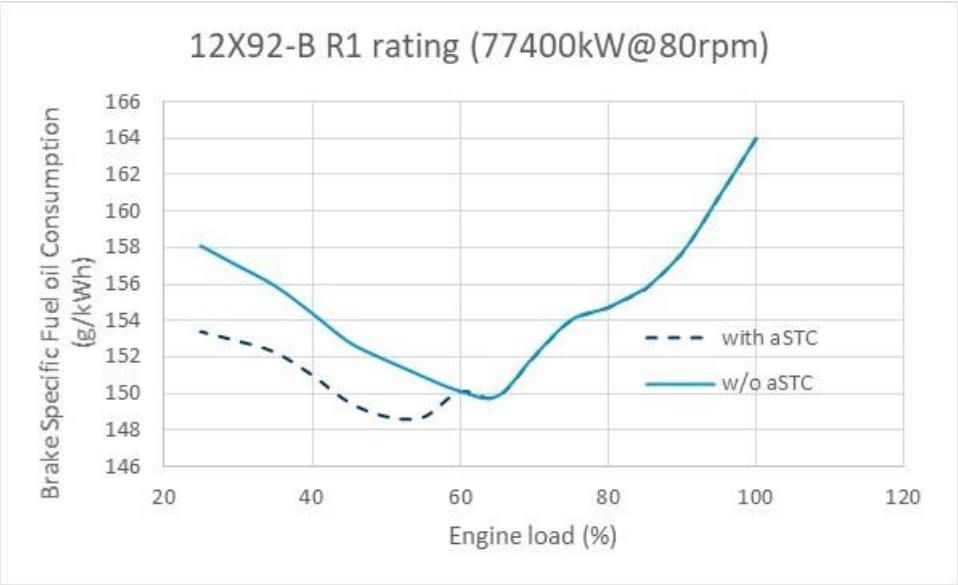

Figure 2-1 Fuel consumption savings with the aSTC option as a function of engine power

3 The aSTC system description and arrangement

The aSTC is available for both ABB and MHI turbochargers. The cut-out turbocharger requires a separate connection for sealing air. Air from the scavenge air receiver is used as sealing air. Figure 3-1 shows the schematic overview of the turbocharging arrangement for aSTC. Figure 3-2 shows the ON/OFF switch butterfly valves installed before the turbine and after the compressor of the turbocharger. Pneumatic air from the control air system is used for the actuation of the butterfly valves. The WiCE engine control system is directly controlling the valves without the need of additional electronic control modules. The aSTC does not have any influence on the engine pipe connections to the external systems. The turbochargers remain in the same position and current engine outline drawings remain valid also in case of the aSTC option.

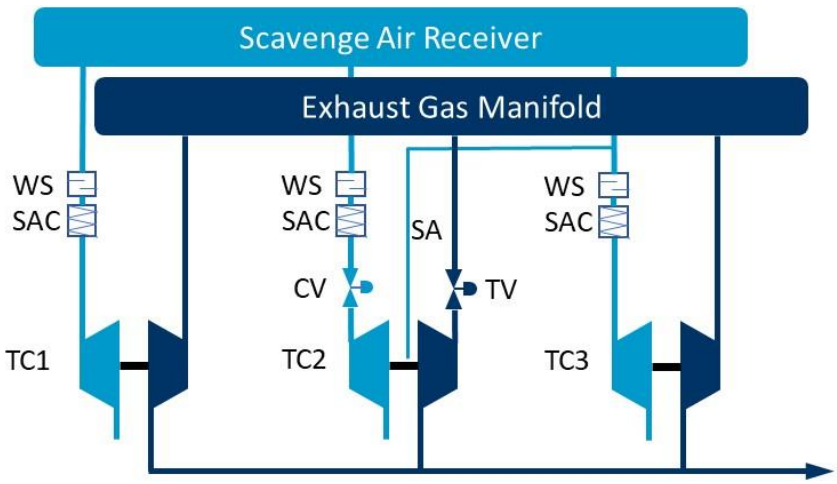

TC Turbocharger

CV Compressor switch ON/OFF Valve

SAC Scavenge Air Cooler

TV Turbine switch ON/OFF Valve

WS Water Separator

SA Sealing Air

Figure 3-1 The aSTC system overview

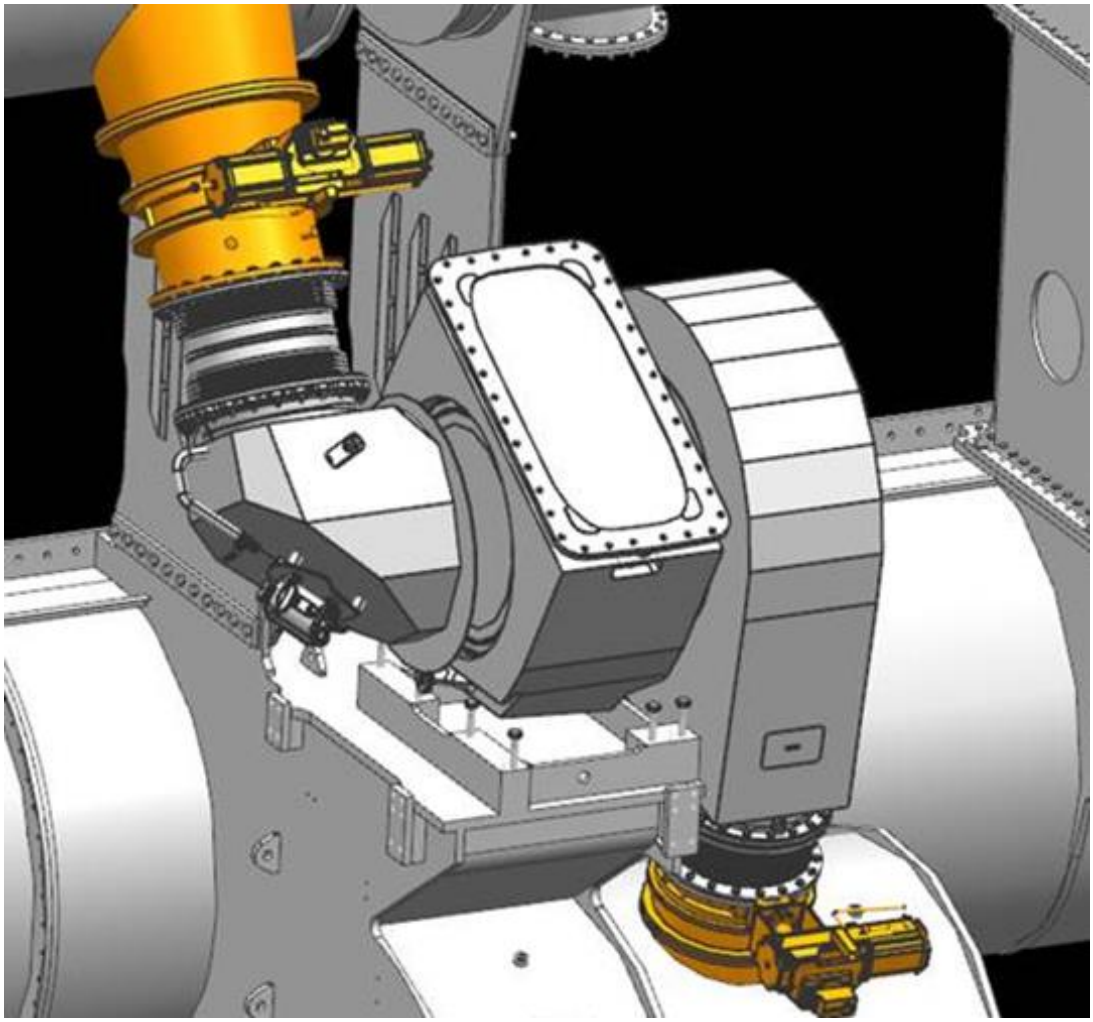

Figure 3-2: ON/OFF switch butterfly valves installed before turbine inlet and after compressor outlet