Ra6,3 (Ra1,6) Material 34CrMo 4 verguetet Rm = 800-950 N/mm 2
MATERIAL HEAT TREATED

Empfohlene Ausfuehrung der Bolzen und Muttern fuer Kurbelwellen - Verschraubung.
RECOMMENDED DESIGN OF BOLTS AND NUTS FOR CRANKSHAFT SCREWING.
Lieferung Werft
SUPPLY BY SHIPYARD

Ra6,3 (Ra0,8) Material C45E/S45C normalgegluehtRm 590...720 N/mm 2
MATERIAL NORMALIZED

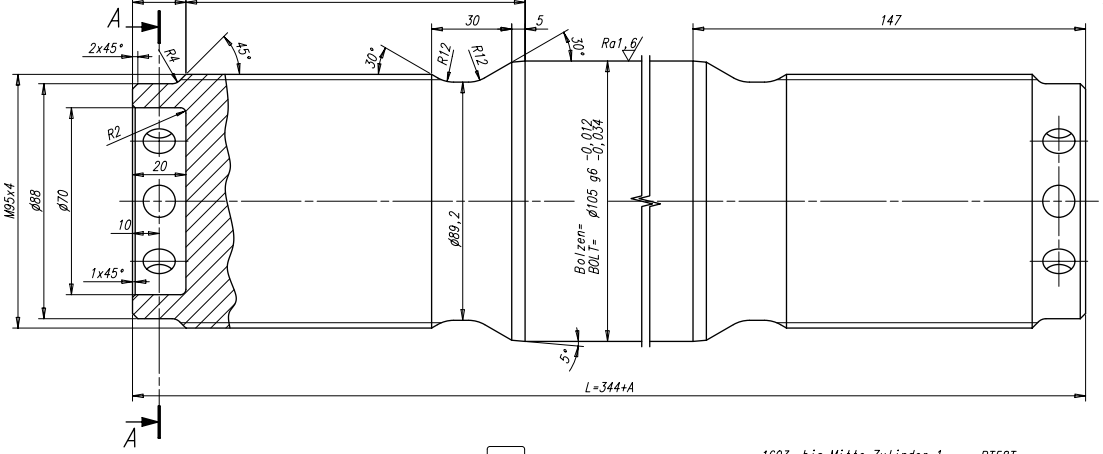

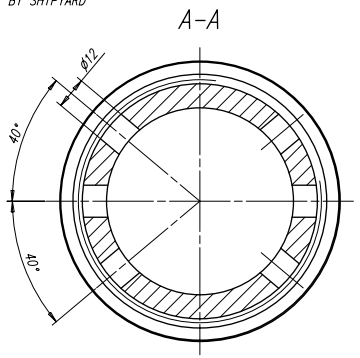

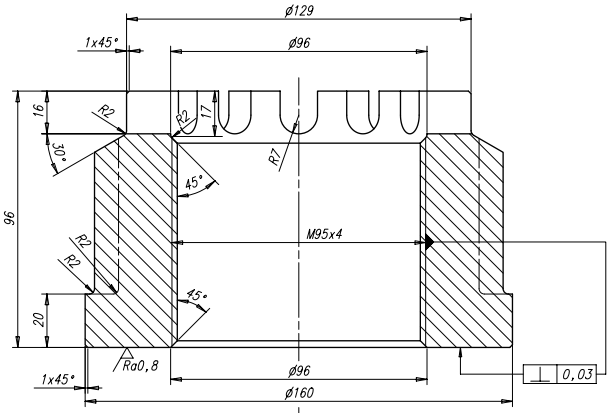

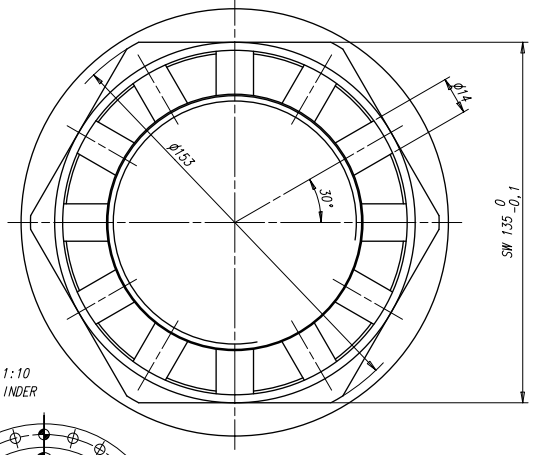

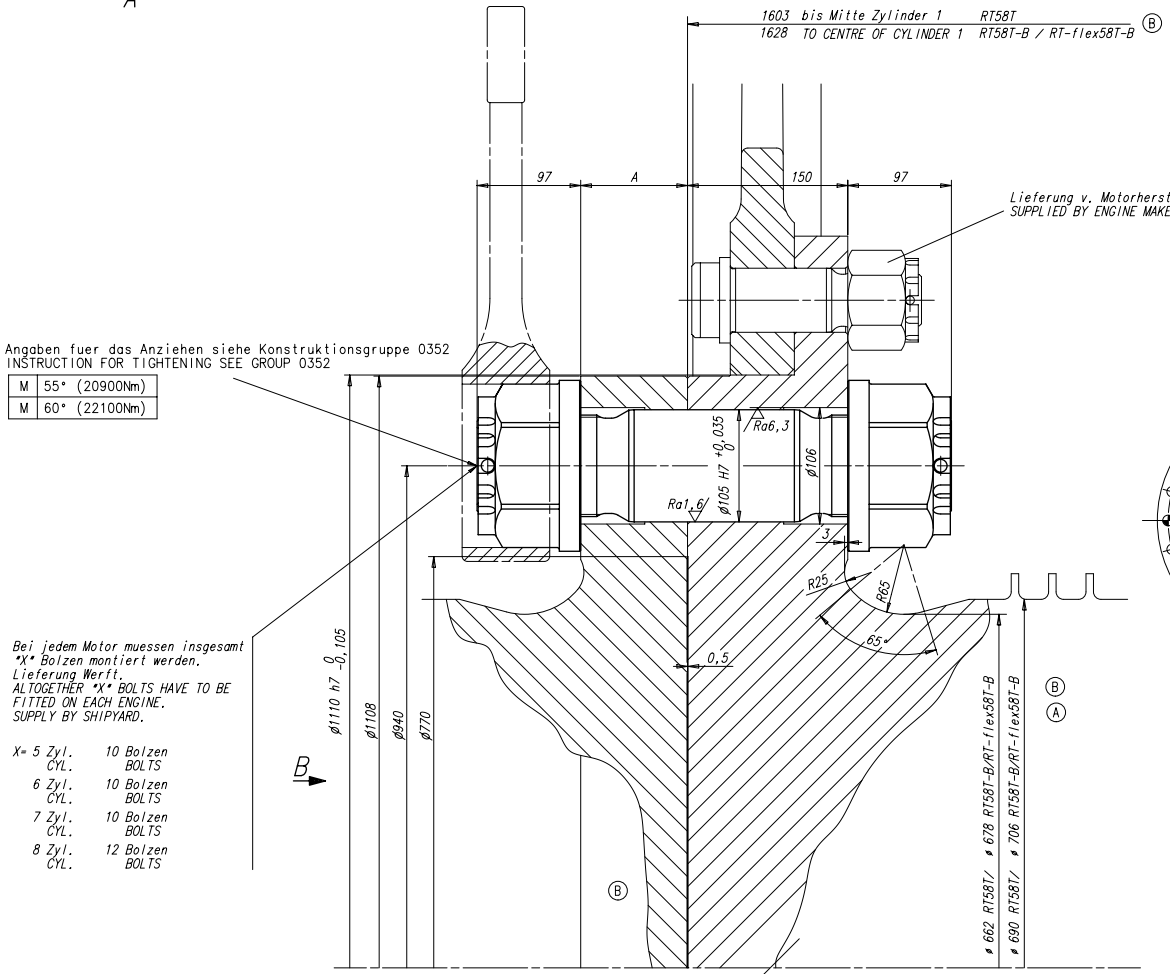

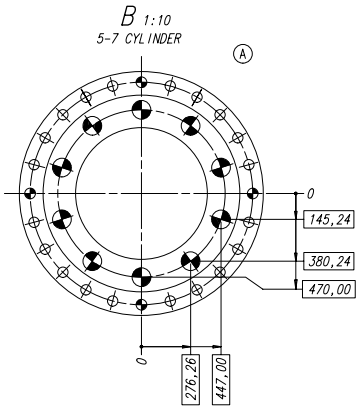

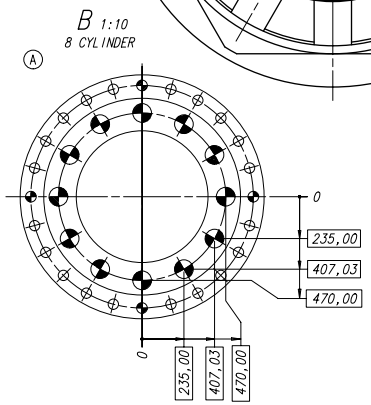

* THIS TABLE REFERS TO DIN EN 10204-(2004), 'TYPES OF INSPECTION DOCUMENTS'		
LISTED ARE THE MOST STRINGENT CERTIFICATION REQUIREMENTS. ACTUAL REQUIREMENTS MUST BE AGREED WITH THE APPROPRIATE CLASSIFICATION SOCIETY		
TEST TYPE:	CERTIFICATE TYPE:	TESTING FREQUENCY:
MATERIAL	MATERIAL IDENTIFICATION	-
CHEMICAL ANALYSIS	CLASSIFICATION CERTIFICATE 3.2 *	TEST PER ORDER LOT OR PER CHARGE IF SEVERAL CHARGES
TENSILE TEST	CLASSIFICATION CERTIFICATE 3.2 *	TEST PER ORDER LOT OR PER CHARGE IF SEVERAL CHARGES
IMPACT TEST	CLASSIFICATION CERTIFICATE 3.2 *	TEST PER ORDER LOT OR PER CHARGE IF SEVERAL CHARGES
HARDNESS TEST	INSPECTION CERTIFICATE 3.1 * (INDEPENDENT AUTHORITY)	EXAMINATION OF EACH PART
SURFACE CRACK DETECTION TEST	CLASSIFICATION CERTIFICATE 3.2 *	EXAMINATION OF EACH PART

1	001	107.427.450.200	MATERIAL AND TEST SPECIFICATION ELASTIC BOLT		107.427.450						0.006
QTY	SEQ NO	Material ID	Material Name	Dimension/Occ.Dimension	Standard or Drawing				Basic Material Material Standard		Weight GR./NET
Free space for Lic.									Q-Code 1QXP1		Main Dra.
									Standard ISO JIS		H
Mod I	A	7-25.377	15.09.1998	B	7-44.190	02.06.2006	C	EAAD084524	25.03.2013	D EAAD086221	02.11.2015
	Number	Drawn date		Number	Drawn date		Number	Drawn date		Number	Drawn date

WIN GD Winterthur Gas & Diesel

Product
RTA58T-B/-D
RT-flex58T-B/-D
RT-flex58T-E
RT-flex58T-D ER-3

CONNECTION CRANK/PROPELLER SHAFT

Verbindng Kurbel-/Propellerwelle

Units	mm kg	IDE	Basic Material						Net Weight 0.001
Mode	01.02.1995 J.Brunner		Scale 1:2,5	Size A1	Page 1/1	Material ID 107.295.675.500			
Chkd			Design Group 3114						
Appd	27.05.2013 wdms2 Administrator		Drawing ID 107.295.675					Rev. D	

SURFACE PROTECTION SEE GROUP 0344			
TOLERANCING PRINCIPLE ISO8015			
GENERAL TOLERANCES ACCORDING TO ISO2768-mK			

M	MOLYKOTE PASTE G-n On threads and contact surfaces	O	OIL On threads and contact surfaces	N	NEVER SEEZ NSBT8 On threads and contact surfaces	K	NO ADDITIONAL LUBRICATION

D

Copyright Winterthur Gas & Diesel Ltd. All rights reserved. By taking possession of the drawing the recipient recognizes and honours these rights. Neither the whole nor any part of this drawing may be used in any way for construction, fabrication, marketing or any other purpose nor copied in any way nor made accessible to third parties without the previous written consent of Winterthur Gas & Diesel Ltd.

WIN - ORIGINAL DRAWING - Confidential