Quantity PER ENGINE	SEQ NO	Material ID	Material Name / Dimension, Occ	Standard or Drawing	Basic Material / Material Standard	Weight GR./NET	NetWeight
							0,001
1	005	107.246.880.500	CONCEPT GUIDANCE FUEL OIL TREATMENT	107.246.880		0,001	
1	004	107.428.377.500	DISTILLATE FUELS CONCEPT GUIDANCE	107.428.377		0,001	
1	003	107.341.454.500	INSTRUCTION FOR FLUSHING	107.341.454		0,001	
1	001	107.328.326.500	FUEL OIL SYSTEM HFO&MDO&MGO	107.328.326		0,001	

D

107.328.344.200 MaterialID

Free space for lic.

Q-Code: XXXXX

Standard: ISO; JIS

Main Drw.: H

Modif.	Number	Drawn date	Number	Drawn date	Number	Drawn date	Number	Drawn date
A	7-29.631	20.04.2004	B 7-30.056	27.10.2004	C 7-77.747	11.01.2010	D EAAD089659	27.09.2018

WIN GD Winterthur Gas & Diesel

Product: 5-8RT-flex58T-D

FUEL OIL SYSTEM

Brennstoffsystem

Units mm kg | NX | Basic Material | Net Weight

SURFACE PROTECTION SEE GROUP 0344

TOLERANCING PRINCIPLE ISO8015

GENERAL TOLERANCES ACCORDING TO ISO2768-mK

Made 19.06.2002 S.STYLIANOU

Chkd

Appd 09.01.2003 SNA001

Scale –

Design Group 9723

Size A3 | Page 1/1 | Material ID

Drawing ID 107.328.344 | Rev. D

Approved

DID - DIMENSIONAL DRAWING - Confidential

Copyright Winterthur Gas & Diesel Ltd All rights reserved By taking possession of the drawing the recipient recognizes and honours these rights. Neither the whole nor any part of this drawing may be used in any way for construction, fabrication, marketing or any other purpose nor copied in any way nor made accessible to third parties without the previous written consent of Winterthur Gas & Diesel Ltd

SPECIFICATION which must be met

13	OUTLET - Fuel leakage fuel pump and injection control (clean) *1) - Clean fuel: Normal leakage from fuel pump and injection control side. Additional leakage in emergency situation (e.g. high pressure pipe damage) - Free flow by gravity to FO overflow tank or appropriate tank. - Pipe insulated and heated up (50-95 °C)
38	OUTLET - Heating medium for fuel oil trace heating - Connected to condensate manifold or thermal oil return
39	OUTLET - Heating medium for fuel oil trace heating - Connected to condensate manifold or thermal oil return

RT-flex58T-D

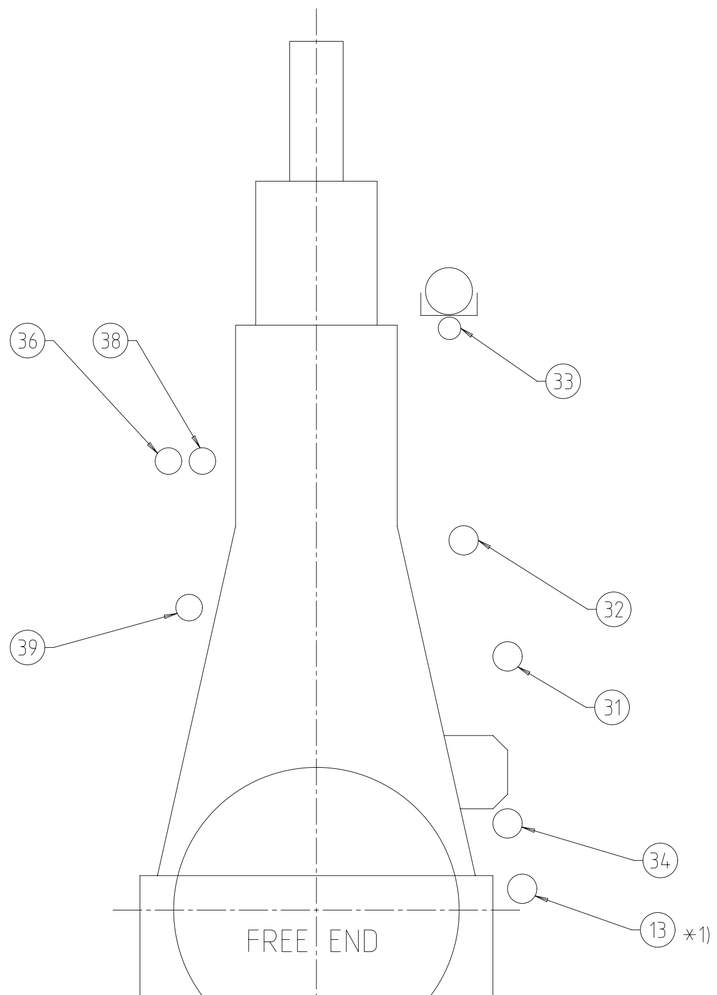

*1) For RT-flex58T-D V1
(supply unit at intermediate level on fuel side)

31 E	INLET - Fuel oil Fuel oil quality at engine inlet: according to specification in Marine Installation Manual (MIM) Pressure at engine inlet: stopped engine: 10 bar running engine: 7-10 bar Volume flow: according to GTD Viscosity: - Viscosity for HFO: 10-20 cSt (recommendation: 13-17 cSt) - Viscosity MDO/MGO: 2-20 cSt Fuel change-over: - Max. temperature gradient during fuel change-over: 2 °C/min - Fuel amount on engine side: mentioned in MIM under "Content of fluids in the engine" - Fuel amount on system side: according to project specific system layout. Filtration: - At least one filter unit close to the engine inlet. - One filter unit with max. 10 micron (absolute, sphere passing mesh) in the fuel system (either in feed- or booster circuit) - Bypass filter in parallel to the main fuel oil filter with max. 25 micron (absolute, sphere passing mesh)
32	OUTLET - Fuel oil return - Normal operation condition: Returning to mixing unit. - During fuel change-over while engine is not in service: returning to service tank.
33	OUTLET - Fuel leakage rail-unit (dirty) - Dirty fuel: Fuel leakage from rail-unit, not for re-use - Free flow by gravity to sludge oil tank or appropriate tank. - Pipe insulated and heated up (50-95 °C)
34	OUTLET - Fuel leakage fuel pump and injection control (clean) - Clean fuel: Normal leakage from fuel pump and injection control side. Additional leakage in emergency situation (e.g. high pressure pipe damage) - Free flow by gravity to FO overflow tank or appropriate tank. - Pipe insulated and heated up (50-95 °C)
36	INLET - Heating medium for fuel oil trace heating - Connected to steam or thermal oil supply

1	008	107.246.320.500	MIXING UNIT	107.246.320		0,001
QTY	SEQ NO	Material ID	Material Name / Dimension, Occ	Standard or Drawing	Basic Material / Material Standard	Weight GR./NET

Free space for lic.

Q-Code: XXXXX
Standard: ISO; JIS
Main Drw.

Modif.	Number	Drawn date	Number	Drawn date	Number	Drawn date	Number	Drawn date
B	EAAD083822	26.06.2012	C EAAD085468	05.02.2015	D EAAD085894	16.07.2015	E EAAD089659	27.09.2018

WIN GD
Winterthur Gas & Diesel

Product: 5-8RT-flex58T-D

FUEL OIL SYSTEM
HFO&MDO&MGO
Brennstoffsystem

Units mm kg | NX | Basic Material | Net Weight 0,001

SURFACE PROTECTION SEE GROUP 0344	Made 19.06.2002 S.Stylianou	Scale -	Size A2	Page 1/2	Material ID 107.328.326.500
TOLERANCING PRINCIPLE ISO8015	Chkd	Design Group 9723	Drawing ID 107.328.326		Rev. E
GENERAL TOLERANCES ACCORDING TO ISO2768-mK	Appd 09.01.2003 SNA001				

Approved

DID - DIMENSIONAL DRAWING - Confidential

Copyright Winterthur Gas & Diesel Ltd. All rights reserved. By taking possession of the drawing the recipient recognizes and honours these rights. Neither the whole nor any part of this drawing may be used in any way for construction, fabrication, marketing or any other purpose nor copied in any way nor made accessible to third parties without the previous written consent of Winterthur Gas & Diesel Ltd.

SYSTEM PROPOSAL - Main fuel oil supply and fuel oil treatment

E

Pos.	ENGINE COMPONENTS *3)
EC01	Fuel rail unit
EC02	Fuel supply unit

Possible tank arrangements:

Option 1.)
HFO: 1 settling tank, 1 service tank
LSHFO: 1 settling tank, 1 service tank
MDO: 1 settling tank, 1 service tank

Option 2.)
HFO: 2 settling tanks, 1 service tank
LSHFO: 2 settling tanks, 1 service tank
MDO: 1 settling tank, 1 service tank

Option 3.)
HFO & LSFO combined: 2 settling tanks
HFO: 1 service tank
LSHFO: 1 service tank
MDO: 1 settling tank, 1 service tank

Pos.	ENGINE CONNECTIONS *2)
31	INLET - Fuel oil
32	OUTLET - Fuel oil return
33	OUTLET - Fuel leakage rail-unit (dirty)
34	OUTLET - Fuel leakage fuel pump and injection control (clean)
36	INLET - Heating medium for fuel oil trace heating
38	OUTLET - Heating medium for fuel oil trace heating
39	OUTLET - Heating medium for fuel oil trace heating
13	OUTLET - Fuel leakage fuel pump and injection control (clean) *16)

Number of cylinders			5	6	7	8
Main engine RT-flex58T-D (R1 rated)	power	(kW)	11300	13560	15820	18080
	speed	(rpm)	105			
Proposal for dimensioning *4)						
Mixing unit	capacity	(l)	acc. to separate drawing			
Heavy fuel oil settling tank	capacity	(m^3)	17	20	23	27
Heavy fuel oil service tank	capacity	(m^3)	17	20	23	27
Marine diesel oil service tank	capacity	(m^3)	18	22	25	29
Norminal pipe diameter	A	DN	50	50	65	65
	B	DN	32	40	40	40
	C	DN	40	50	50	50
	D	DN	65	65	80	80
	E	DN	50	50	65	65

I Both valves to be interconnected

II Changeover LSHFO and HFO for fuel treatment

III Changeover LSHFO and HFO for ME operation

IV Changeover MDO and MGO for ME operation

Pos.	SYSTEM COMPONENTS *1)
001	Three-way valve, manually or remotely operated
002	Automatic fuel change-over unit
003	Suction strainer (mesh size acc. to pump suppliers requirement)
004	Low pressure feed pump
005	Pressure regulating valve
006	Automatic self-cleaning filter, 10 micron, heated (trace heating acceptable)
007	Flowmeter
008	Mixing unit, heated and insulated (according to separate drawing as linked on page 1)
009	High pressure booster pump
010	Fuel oil endheater
011	Fuel oil cooler (cooling by LT water)
012	Viscometer
013	Fuel oil filter, 25 micron, heated (trace heating acceptable)
014	Transition Piece (adapter) *10)
015	MDO settling tank, heated and insulated
016	HFO settling tank, heated and insulated
017	LSHFO settling tank, heated and insulated
018	HFO service tank, heated and insulated
019	LSHFO service tank, heated and insulated
020	MDO service tank
021	Suction strainer (mesh size acc. to pump suppliers requirement)
022	HFO/LSHFO separator supply pump, with safety valve
023	HFO/LSHFO pre-heater
024	Self-cleaning HFO/LSHFO separator *6)
025	Three-way valve, diaphragm operated
026	Sludge tank
027	Fuel oil drain tank *12)
028	MDO/MGO clean leakage tank *11) *12)
029	Suction strainer (mesh size acc. to pump suppliers requirement)
030	MDO separator supply pump, with safety valve
031	MDO pre-heater
032	Self-cleaning MDO separator *6)
033	Three-way valve for switching between fuel drain tank and MDO/MGO clean leakage tank *9)
034	Fuel sampling cock *8)
035	MGO service tank
039	Heating coil

Remarks

- Feed pumps (pos.004) shall be installed below MDO/MGO and HFO/LSHFO service tanks.
- All heaters to be fitted with thermometers, relief valves, drains and drip trays. Not shown on drawing.
- Steam tracers on main engine are laid out for 7 bar saturated steam.
- Air vent and drain pipes must be fully functional at all inclination angles of the ship at which the engine must be operational.
- Overflow and drain pipes for fuel oil tanks are not shown

*1) To be delivered by external suppliers and to be installed by the shipyard.

*2) Refer to the "Pipe Connection Plan" for the execution and location of the engine pipe connections.

*3) To be delivered by the engine manufacturer, i.e. already equipped on engine side.

*4) All capacities and the given diameters are valid for the mentioned engine rating and serve just as an example. The given tank capacities are based on 8 h settling tank change-over intervals. To make the layout for the project specific rating please refer to design group 9730 "Fluid velocities and flow rates, recommended values for pipework of diesel plants". Rating specific flow rates are provided by GTD.

*5) Valve to be kept closed during normal engine operation. For draining only.

*6) Separator capacity related to viscosity; layout according to certified flow rate (CFR) recommended.

*7) The return pipe may lead to HFO service tank if ME is only running in HFO mode. The return line must be fully exposed to air without any insulation and equipped with cooling ribs or other type of radiative cooler.

*8) Recommended position for fuel oil sampling to check fuel oil quality.

*9) Just to be applied if in addition to the fuel drain tank a separate tank for collection of clean MDO/MGO is installed to enable the switching between the different tanks depending on the fuel in use.

*10) Installed as required (check with "Pipe Connection Plan").

*11) The leakage rate of MDO/MGO is significantly higher than the leakage rate of HFO. Therefore, during long-term operation on MDO/MGO the collection of clean MDO/MGO in a separate leakage tank is highly recommended.

*12) The tank inlet only to be equipped with a swing check valve to avoid inadmissible backpressure.

*13) Close during normal engine operation.

*15) Optional heating coil.

*16) For RT-flex58T-D V1 (supply unit at intermediate level on fuel side).

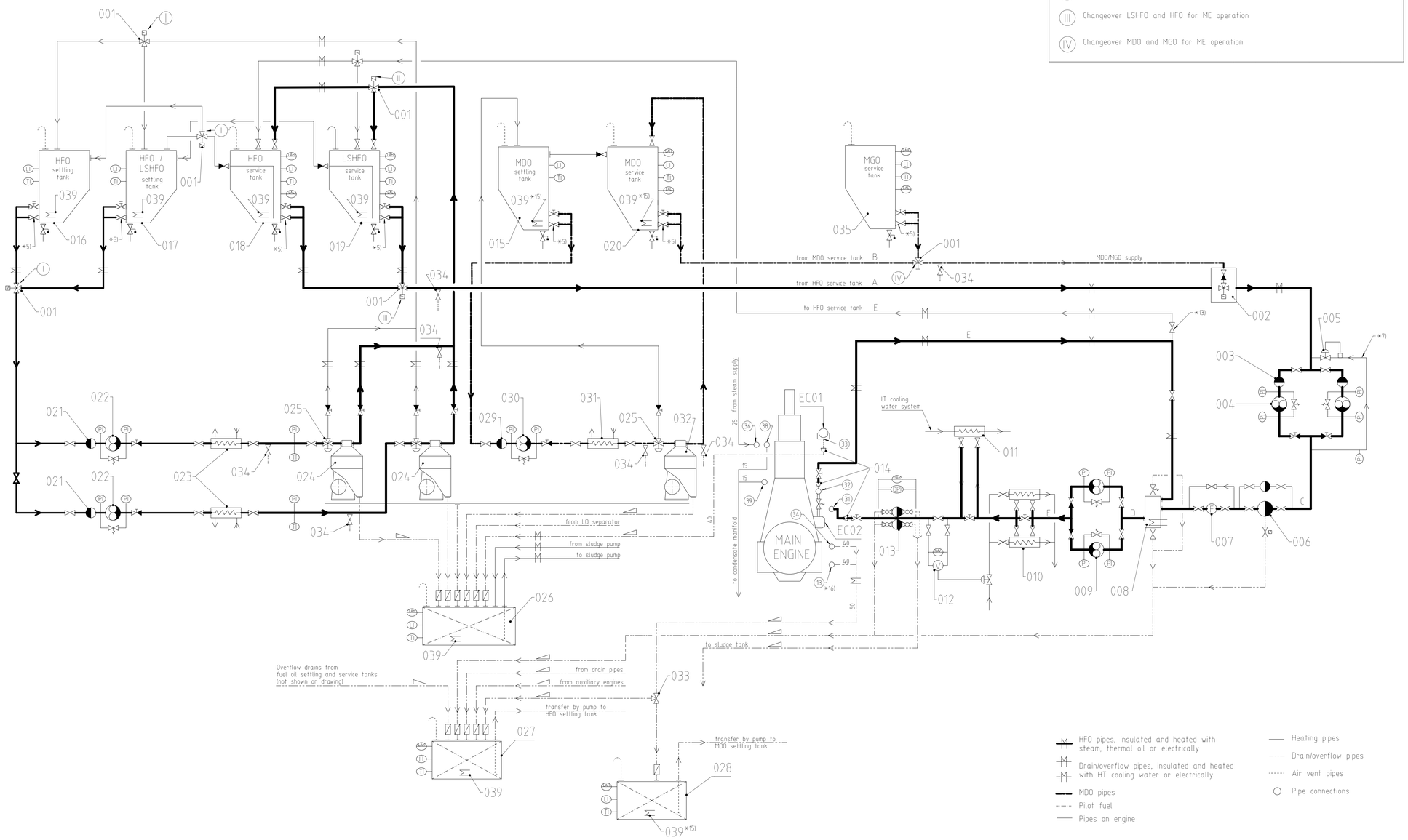

HFO pipes, insulated and heated with steam, thermal oil or electrically

Drain/overflow pipes, insulated and heated with HT cooling water or electrically

MDO pipes

Pilot fuel

Pipes on engine

Heating pipes

Drain/overflow pipes

Air vent pipes

Pipe connections

Index	Free space for ID															
													Q-Code XXXXX			Main Drw.
													Standard ISO; JIS			
	B	EAAD083822	26.06.2012	C	EAAD085468	05.02.2015	D	EAAD095894	16.07.2015	E	EAAD089659	27.09.2018				
		Number	Drawn date		Number	Drawn date		Number	Drawn date		Number	Drawn date				

WIN GD Winterthur Gas & Diesel

Product: S-RT-flex58T-D

FUEL OIL SYSTEM
HFO&MDO&MGO
Brennstoffsystem

Units: mm kg	NX	Basic Material:			Net Weight 0,001
SURFACE PROTECTION SEE GROUP 0344	Made 19.06.2002 S.Stylianou	Scale -	Size A0	Page 2/2	Material ID 107.328.326.500
TOLERANCING PRINCIPLE ISO8015	Chkd	Design Group 9723			Drawing ID 107.328.326 Rev. E
GENERAL TOLERANCES ACCORDING TO ISO2768-mK	Appd 09.01.2003 SNA001				

Approved

Copyright Winterthur Gas & Diesel Ltd. All rights reserved. By taking possession of the drawing the recipient recognizes and honours these rights. Neither the whole nor any part of this drawing may be used in any way for construction, fabrication, marketing or any other purpose nor copied in any way nor made accessible to third parties without the previous written consent of Winterthur Gas & Diesel Ltd.

RT-flex58T-B/-D/-E

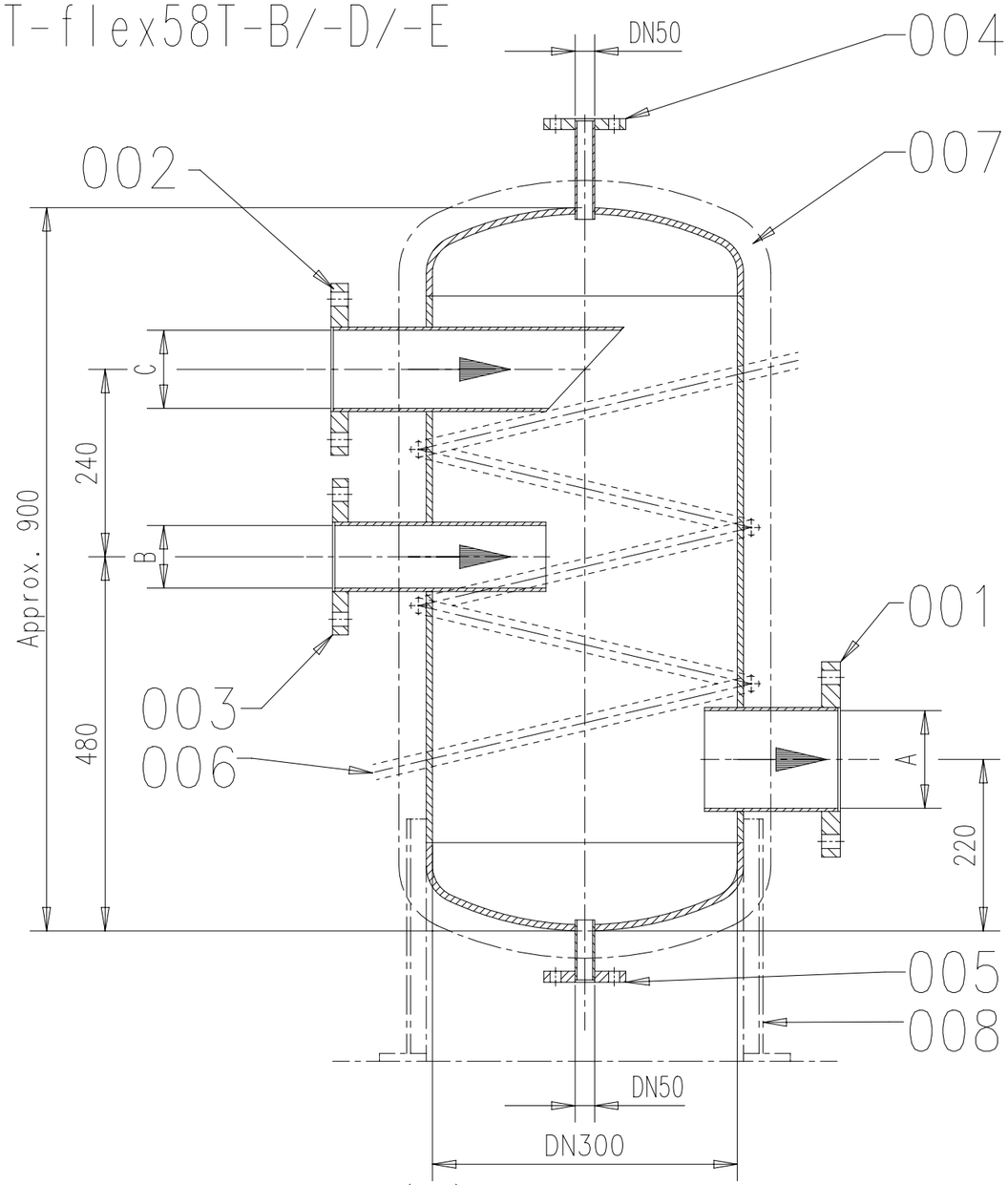

Pos.	Description
001	Outlet
002	Inlet, return line
003	Inlet, from feed pump
004	Outlet safety valve
005	Drain
006	Heating coil
007	Insulation
008	Mounting brackets *1)

Remarks:

- Configuration and dimensioning of the mixing unit have to comply with the relevant classification society/rules.

*1) Mounting brackets for fixation on floor plate. The mixing unit must under no circumstances be fitted unsupported.

Nominal pipe diameters (DN)

No. of cyls.	A	B	C
	DN	DN	DN
5	65	40	50
6	65	40	50
7	65	50	65
8	80	50	65

Capacity: 65 l
Design pressure: 10 bar
Service temperature: 150 °C

Modif.	Number	Drawn date	Number	Drawn date	Number	Drawn date	Number	Drawn date
A	7-28.593	09.01.2003	B EAAD087849	14.06.2017				

Free space for lic.

Q-Code: XXXXX
Standard: ISO; JIS
Main Drw.

WIN GD Winterthur Gas & Diesel

Product: W-58

MIXING UNIT
TO FUEL OIL SYSTEM

Units: mm kg | NX | Basic Material | Net Weight 0.001

SURFACE PROTECTION SEE GROUP 0344
TOLERANCING PRINCIPLE ISO8015
GENERAL TOLERANCES ACCORDING TO ISO2768-mK

Made: 04.06.1999 S.Stylianou
Chkd:
Appd: 06.04.1999 WCH001 Service User

Scale: -
Design Group: 9723
Size: A3
Page: 1/1
Material ID: 107.246.320.500
Drawing ID: 107.246.320
Rev.: B

Approved

DID - DIMENSIONAL DRAWING - Confidential

Copyright Winterthur Gas & Diesel Ltd. All rights reserved. By taking possession of the drawing the recipient recognizes and honours these rights. Neither the whole nor any part of this drawing may be used in any way for construction, fabrication, marketing or any other purpose nor copied in any way nor made accessible to third parties without the previous written consent of Winterthur Gas & Diesel Ltd.

MIDS - WinGD RT-flex58T-D – Fuel Oil System

TRACK CHANGES

DATE	SUBJECT	DESCRIPTION
2017-08-21	DRAWING SET	First web upload
2018-10-04	107.328.344 107.328.326	Main drg – new revision System drg – new revision

DISCLAIMER

© Copyright by Winterthur Gas & Diesel Ltd.
All rights reserved. No part of this document may be reproduced or copied in any form or by any means (electronic, mechanical, graphic, photocopying, recording, taping or other information retrieval systems) without the prior written permission of the copyright owner.

THIS PUBLICATION IS DESIGNED TO PROVIDE AN ACCURATE AND AUTHORITATIVE INFORMATION WITH REGARD TO THE SUBJECT-MATTER COVERED AS WAS AVAILABLE AT THE TIME OF PRINTING. HOWEVER, THE PUBLICATION DEALS WITH COMPLICATED TECHNICAL MATTERS SUITED ONLY FOR SPECIALISTS IN THE AREA, AND THE DESIGN OF THE SUBJECT-PRODUCTS IS SUBJECT TO REGULAR IMPROVEMENTS, MODIFICATIONS AND CHANGES. CONSEQUENTLY, THE PUBLISHER AND COPYRIGHT OWNER OF THIS PUBLICATION CAN NOT ACCEPT ANY RESPONSIBILITY OR LIABILITY FOR ANY EVENTUAL ERRORS OR OMISSIONS IN THIS BOOKLET OR FOR DISCREPANCIES ARISING FROM THE FEATURES OF ANY ACTUAL ITEM IN THE RESPECTIVE PRODUCT BEING DIFFERENT FROM THOSE SHOWN IN THIS PUBLICATION. THE PUBLISHER AND COPYRIGHT OWNER SHALL UNDER NO CIRCUMSTANCES BE HELD LIABLE FOR ANY FINANCIAL CONSEQUENTIAL DAMAGES OR OTHER LOSS, OR ANY OTHER DAMAGE OR INJURY, SUFFERED BY ANY PARTY MAKING USE OF THIS PUBLICATION OR THE INFORMATION CONTAINED HEREIN.

Winterthur Gas & Diesel Ltd.
Winterthur Gas & Diesel AG.
Winterthur Gas & Diesel S.A.

Schützenstrasse 3
PO Box 414, CH-8401
Winterthur, Switzerland

Tel. +41 (0)52 264 8844
Fax +41 (0)52 264 8866

www.wingd.com