DOWNLOAD
"DXF FILE"

Beim Montieren der Leitung ist die Waermeausdehnung von 5 mm gegen Freies Ende von der theor. Mitte aus zu beruecksichtigen
WHEN ASSEMBLING THE PIPING THE THERMAL EXPANSION OF 5 MM TOWARDS THE FREE END FROM THE THEORETICAL CENTRE IS TO BE CONSIDERED

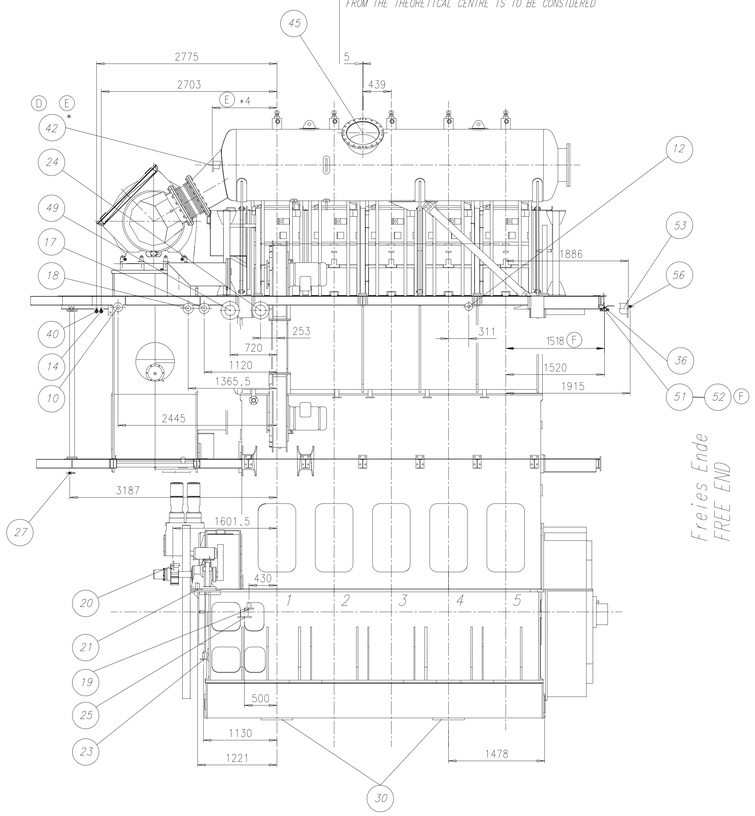

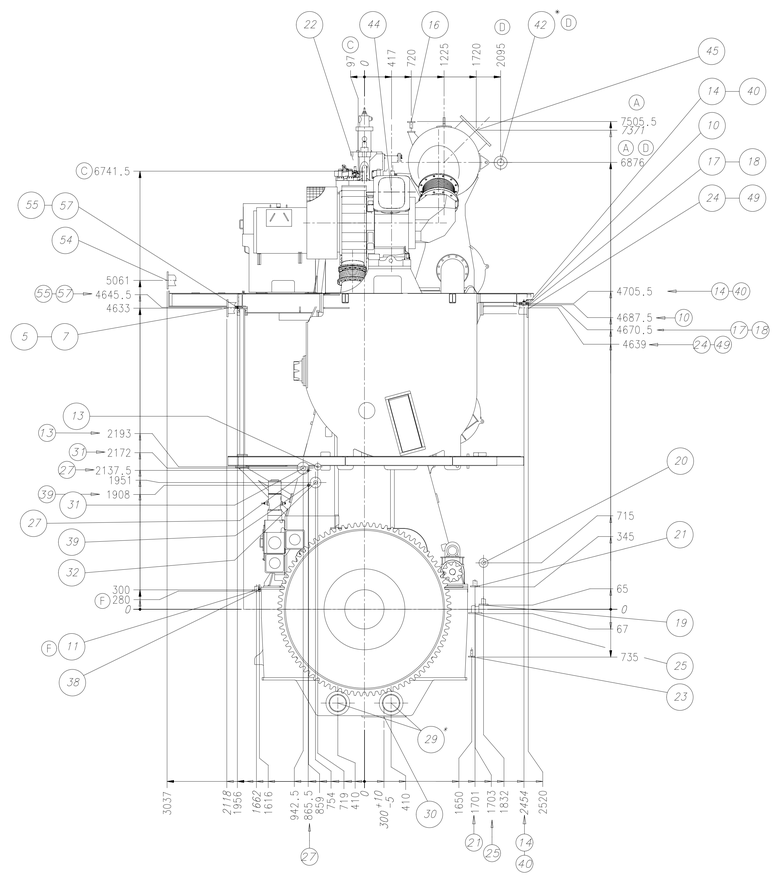

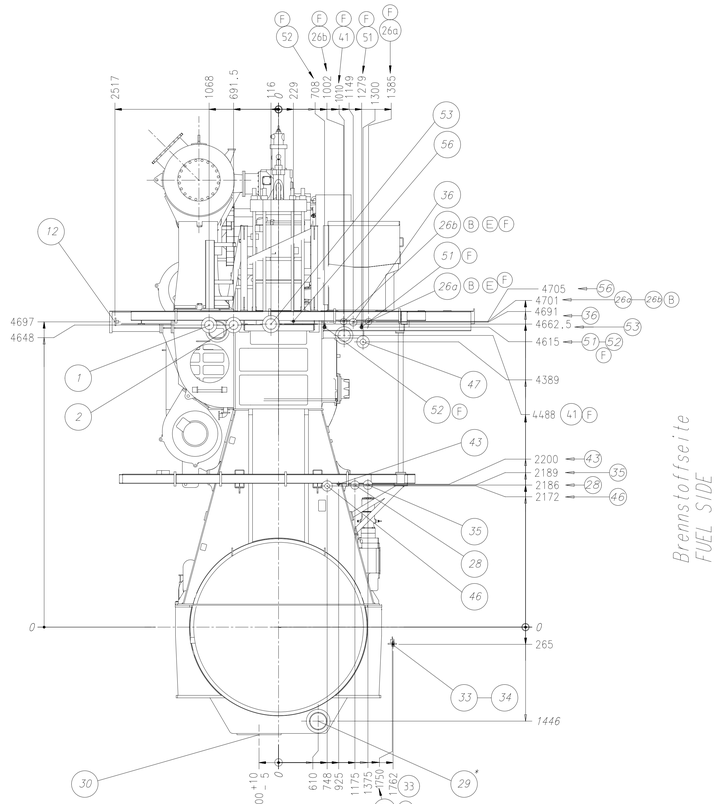

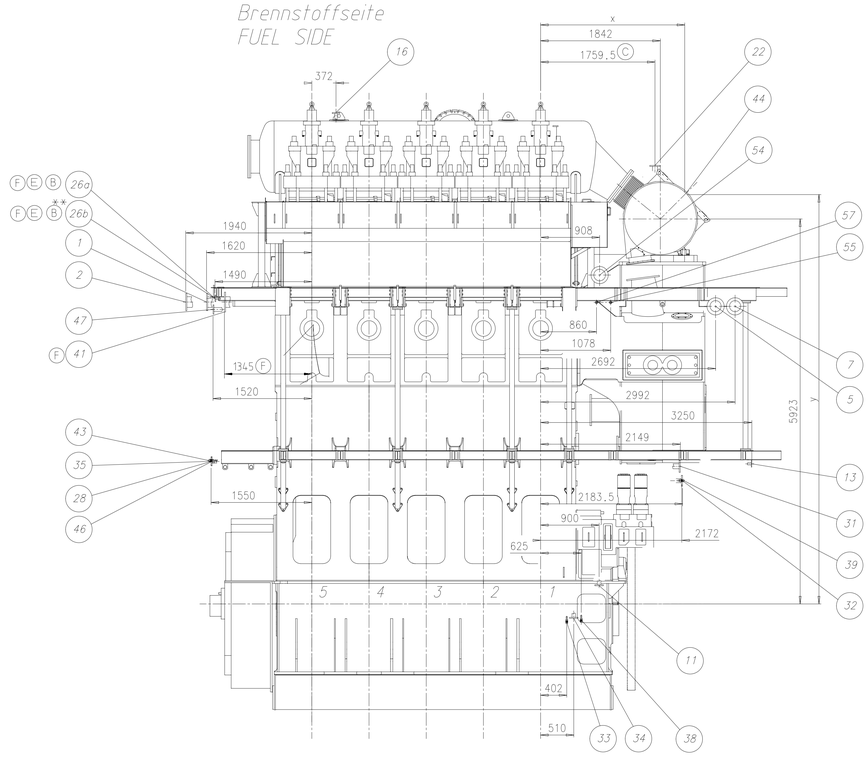

Alle Flanschanschluesse am Motor sind mit Gegenflanschen versehen (Blindflansch), ausgenommen der Anschluss fuer den Gasaustritt am Turbolader. Die Blindflansche sind nach dem betreffenden Rohrdurchmesser des Werftanschlusses aufzubohren.
THE PIPE CONNECTIONS ON THE ENGINE ARE SUPPLIED WITH MATING FLANGES (BLIND), WITH EXCEPTION OF THE TURBOCHARGER EXHAUST GAS OUTLET. BLIND FLANGES TO BE DRILLED TO MATCH PIPE DIA SUPPLIED BY THE SHIPYARD.

Die Gewinde-Anschluesse werden komplett geliefert
SCREWED CONNECTIONS ARE SUPPLIED COMPLETE

1x A165-L/A265-L (D)

Gasaustritt-Stellung GAS OUTLET POSITION	x	y
0°	1842	6448
15°	1978	6431
30°	2105	6378
45°	2213	6294

(44) 1:20

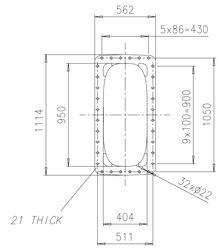

(45) 1:20

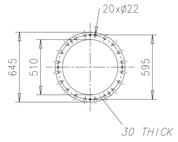

(53) 1:2

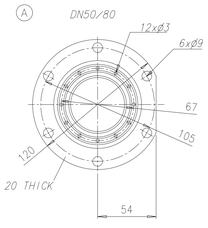

Anschlussprinzip siehe Stueckliste Pos.002
CONNECTION PRINCIPLE SEE PARTS LIST

(E) *4 SEE DAAD116127
(B) ** ONLY FOR INTEGRATED CYL. LUBRICATION AUTOMATIC TRANSFER (ICAT)

* Optionale Ausführung (wenn verlangt)
OPTIONAL EXECUTION (IF REQUIRED)

Quantity PER ENGINE	SEQ NO	Material ID	Material Name / Dimension, Doc	Standard or Drawing	Basic Material Material Standard	Weight GR/NET
Net Weight	0,001					
1	002	PAAD147122	FLANGE DIMENSIONS	DAAD045822		0,01
1	001	107.390.729.500	FLANGE DIMENSIONS	107.390.729		0,001

Weight

PAAD059397	Free Area for ID											
Modif.	C	EAAD091053	23.12.2019	D	EAAD094008	27.07.2020	E	EAAD095956	02.02.2021	F	EAAD096095	12.03.2021
Material ID		Number	Drawn date		Number	Drawn date		Number	Drawn date		Number	Drawn date

Q-Code XXXXX
Standard ISO
Main Drw. H

WIN GD Winterthur Gas & Diesel

Product SRT-flex50DF

PIPE CONNECTION PLAN

Rohranschlussplan

Units mm kg	NX	Basic Material				Net Weight
Made	10.07.2015 rsax04 R.W.sola	Scale 1:33	Size A0	Page 1/1	Material ID	
Chkd	04.09.2014 ihe003 Hercog	Design Group 8020				
Appd	05.09.2014 bha009 Haag	Drawing ID DAAD049590			Rev. F	

SURFACE PROTECTION SEE GROUP 0344
TOLERANCING PRINCIPLE ISO8015

Copyright Winterthur Gas & Diesel Ltd. All rights reserved. By taking possession of the drawing the recipient recognizes and honours these rights. Neither the whole nor any part of this drawing may be used in any way for construction, fabrication, marketing or any other purpose nor copied in any way nor made accessible to third parties without the previous written consent of Winterthur Gas & Diesel Ltd.

© WINGD/DOK/SPRACHE/ — INTERNO

				Ko.Gr. KO.GR.	Leitungs-Anschluesse PIPE-CONNECTIONS: Freies Ende FREE END	Antriebseite DRIVING END	Abgasseite EXHAUST SIDE	Brennstoffseite FUEL SIDE
1		Kuehlwasserleitung Zylindereinsatz Eintritt COOLING WATER PIPE CYLINDER LINER INLET	DN 125 PN 6	8305	X			
2		Zylinderkuehlwasserleitung Austritt CYLINDER COOLING WATER PIPE OUTLET	DN 125 PN 6	8310	X			
5		SLK Leitung Kuehlwasser Eintritt SAC PIPE COOLING WATER INLET	DN 150 PN 6	8335				X
7		SLK Leitung Kuehlwasser Austritt SAC PIPE COOLING WATER OUTLET	DN 150 PN 6	8335				X
10		Sammelleitung Kondenswasser SLK Entlüftung Austritt COLLEC. MAIN CONDENSATE WATER SAC VENTING OUTLET	DN 50 PN 6	8357			X	
11		Oelablaufleitung Versorgungseinheit Austritt OIL PIPE DRAIN SUPPLY UNIT OUTLET	DN 40 PN 6	8454				X
12		Kuehlwasser Entleerungsleitung COOLING WATER DRAIN PIPE	DN 32 PN 6	8313			X	
13		Entlueftung/Entleerung SLK VENTING/DRAIN SAC	DN 25 PN 6	8314		X		
14	Ø25x2	Wasser-/Luftltg. Reinigungsanlage (Wasseranschluss) WATER/AIR PIPE CLEANING PLANT (WATER CONNECTIION)	Ø25 PN 16	8338			X	
16		Zylinderkuehlwasserleitung Entlüftung CYLINDER COOLING WATER PIPE VENTING	DN 32 PN 16	8611	X			
17		Leckoelleitung Auslassventil DE OIL LEAKAGE PIPE EXAUST VALVE DE	DN 65 PN 6	8480			X	
18		Oelleitung Turbolader Austritt OIL PIPE TURBOCHARGER OUTLET	DN 65 PN 6	8431			X	
19		Sammelleitung Kondenswasser SLK Kondenswasser Austritt COLLEC. MAIN CONDENSATE WATER SAC CONDENSATE WATER OUTLET	DN 50 PN 6	8357		X		
20		Sammelleitung Kondenswasser SLK Waschwasser Austritt COLLEC. MAIN CONDENSATE WATER SAC WASHING WATER OUTLET	DN 50 PN 6	8357			X	
21		Sammelltg. Oelwasser Wasserabsch. COLLECTOR MAIN OILWATER WATER SEP.	DN 50 PN 6	8352			X	
22		Oelsystem TL Entlüftung OIL SYSTEM TC VENTING	DN 65 PN 6	8610		X		
23		Sammelleitung Leckoel Grundplatte COLLECTOR MAIN LEAKAGE BEDPLATE	DN 25 PN 6	8463			X	
24		Oelleitung Eintritt OIL PIPE INLET	DN 125 PN 6	8406			X	
25		Sammelltg. Schmutzoel Kolbenu.seite COLLECTOR MAIN DIRTY OIL PIST.U.SIDE	DN 100 PN 6	8487			X	
F B 26a		Zylinderschmieroelleitung Eintritt CYL. LUBRICATING OIL PIPE INLET (HIGH BN)	DN 25 PN 5	FlexLub 8475	X			X
F B 26b **		Zylinderschmieroelleitung Eintritt CYL. LUBRICATING OIL PIPE INLET (LOW BN)	DN 25 PN 5	FlexLub 8475	X			X
27	Ø25x2	Sammelleitung Automatikfilter Automatikfilter FLUSHING OIL PIPE AUTOMATIC FILTER OUTLET	DN 20 PN 10	8445		X		
28		Sammelleitung Leckoel Stopfbuechse COLL. MAIN LEAKAGE OIL GLAND BOX	DN 40 PN 6	8488	X			
29 *		Grundplatte Oelablauf (Horizontal) BEDPLATE OIL DRAIN (HORIZONTAL)	DN PN	1110	X	X		
30		Grundplatte Oelablauf (Vertikal) BEDPLATE OIL DRAIN (VERTICAL)	DN PN	1110	X	X		
31		Brennstoff Eintritt FUEL OIL INLET	DN 65 PN 16	8702		X		

				Ko.Gr. KO.GR.	Leitungs-Anschluesse PIPE-CONNECTIONS: Freies Ende FREE END	Antriebseite DRIVING END	Abgasseite EXHAUST SIDE	Brennstoffseite FUEL SIDE
32		Brennstoff Austritt FUEL OIL OUTLET	DN 50 PN 16	8704		X		
33		Leckbrennstoffleitung RAIL-UNIT FUEL LEAKAGE PIPE RAIL-UNIT	DN 40 PN 6	8740				X
34		Leckbrennstoffltg. Einspritzventil FUEL LEAKAGE PIPE INJECTION VALVE	DN 40 PN 6	8741		X		X
35		Feuerloeschleitung FIRE EXTINGUISHING PIPE	DN 32 PN 16	8830	X			
36		Heizltg. Brennstoff Eintr/Austr Eintritt HEATING PIPE FUEL INLET/OUTLET INLET	DN 25 PN 16	8810	X			
38	Ø20x2	Heizltg. Brennstoff Eintr/Austr Austritt HEATING PIPE FUEL INLET/OUTLET OUTLET	DN 15 PN 16	8810				X
39	Ø20x2	Heizltg. Brennstoff Eintr/Austr Austritt HEATING PIPE FUEL INLET/OUTLET OUTLET	DN 15 PN 16	8810		X		
40	Ø25x2	Wasser-/Luftltg. Reinigungsanlage (Luftanschluss) WATER/AIR PIPE CLEANING PLANT (AIR CONNECTION)	DN 20 PN 16	8338			X	
F 41		Anlassluftleitung Eintritt STARTING AIR PIPE INLET	DN 125 PN 40	8605	X			X
E A D 42		Abgase-Abblaseventil Austritt EXHAUST WASTE GATE OUTLET	IF USED, SEE DAAD116127	8135	IF USED, SEE DAAD116127			
43	Ø20x2	Steuerluftversorgung 6.5 bar: A1 CONTROL AIR SUPPLY	DN 15 PN 8	8630	X			
44	siehe Zchng 1 SEE DRAWING 1	Turbolader Gasaustritt TURBOCHARGER GAS OUTLET		6506 6509		X		
45	siehe Zchng 1 SEE DRAWING 1	Bypass zur Auspuffleitung (für Motoren mit einem Turbolader) EXHAUST BY PASS (FOR ENGINES WITH ONE TURBOCHARGER)		8103 8108			X	
46		Entlueftungsltg. Kurbelgehaeuse VENTING PIPE CRANKCASE	DN 65 PN 6	8608	X			
47		Oel Zu/Ablaufleitung Servosystem Austritt OIL INLET/DRAIN PIPE SERVO SYSTEM OUTLET	DN 50 PN 6	8448	X			
49		Oelleitung Kreuzkopf Eintritt OIL PIPE CROSSHEAD INLET	DN 125 PN 16	8455			X	
F 51	Ø20x2	Hochdruckltg. Pilot Ventiel Eintritt HIGH PRESSURE PIPE FUEL PILOT VALVE INLET	DN 15 PN 16	8790	X		X	
F 52	Ø25x2	Hochdruckltg. Pilot Ventiel Austritt HIGH PRESSURE PIPE FUEL PILOT VALVE OUTLET	DN 20 PN 16	8790	X		X	
53	siehe Zchng 1 SEE DRAWING 1	Gas verteil Leitung Eintritt GAS DISTRIBUTOR PIPE INLET		8903	X			
54		Gas Entlüftungsleitung DE Austritt GAS VENTING PIPE DE OUTLET	DN 80 PN 16	8910				X
55	Ø25x2	Gas Entlüftungsleitung DE Eintritt GAS VENTING PIPE DE INLET	DN 20 PN 16	8910				X
56	Ø25x2	Gas Entlüftungsleitung FE Austritt GAS VENTING PIPE FE OUTLET	DN 20 PN 16	8911	X			
57	Ø25x2	Gas Entlüftungsleitung DE Austritt GAS VENTING PIPE DE OUTLET	DN 20 PN 16	8910				X

Abmasse der Flansche siehe Stückliste Pos.001
FLANGE DIMENSION SEE PARTS LIST

B ** ONLY FOR INTEGRATED CYL. LUBRICATION AUTOMATIC TRANSFER (iCAT)

* Optionale Ausfuehrung (wenn verlangt)
OPTIONAL EXECUTION (IF REQUIRED)

D 1xA165-L/A265-L

SURFACE PROTECTION SEE GROUP 0344
TOLERANCING PRINCIPLE ISO8015

Free space for lic.

Q-Code XXXXX
Standard ISO
Main Drw. H

Modif.	Number	Drawn date	Number	Drawn date	Number	Drawn date	Number	Drawn date
C	EAAD091053	23.12.2019	D EAAD094008	27.07.2020	E EAAD095956	02.02.2021	F EAAD096095	12.03.2021

WIN GD Winterthur Gas & Diesel

Product 5RT-flex50DF

PIPE CONNECTION PLAN
Rohranschlussplan

Units mm kg	NX	Basic Material			Net Weight
Made	10.07.2015 rsax04 R.W.sola	Scale 1:1	Size A1	Page 2/2	Material ID
Chkd	04.09.2014 ihe003 Herceg	Design Group 8020	Drawing ID DAAD049590		Rev. F
Appd	05.09.2014 bha009 Haag				

Approved

ILD - INSTALLATION DRAWING - Internal

Copyright Winterthur Gas & Diesel Ltd. All rights reserved. By taking possession of the drawing the recipient recognizes and honours these rights. Neither the whole nor any part of this drawing may be used in any way for construction, fabrication, marketing or any other purpose nor copied in any way nor made accessible to third parties without the previous written consent of Winterthur Gas & Diesel Ltd.

DOWNLOAD
"DXF FILE"

Beim Montieren der Leitung ist die Waermeausdehnung von 5 mm gegen Freies Ende von der theor. Mitte aus zu beruecksichtigen
WHEN ASSEMBLING THE PIPING THE THERMAL EXPANSION OF 5 MM TOWARDS THE FREE END FROM THE THEORETICAL CENTRE IS TO BE CONSIDERED

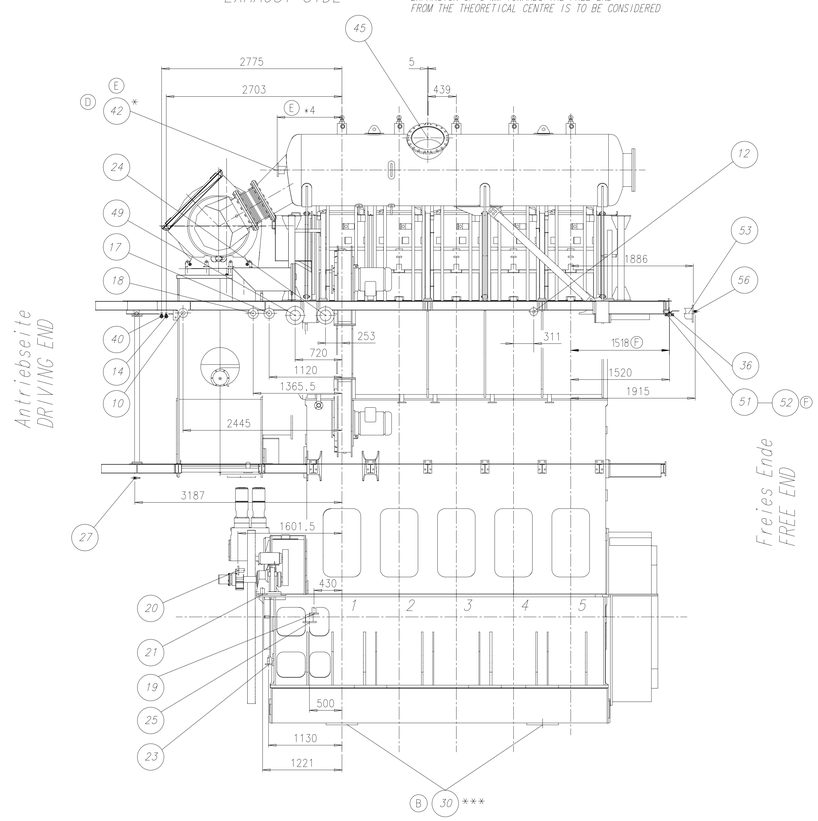

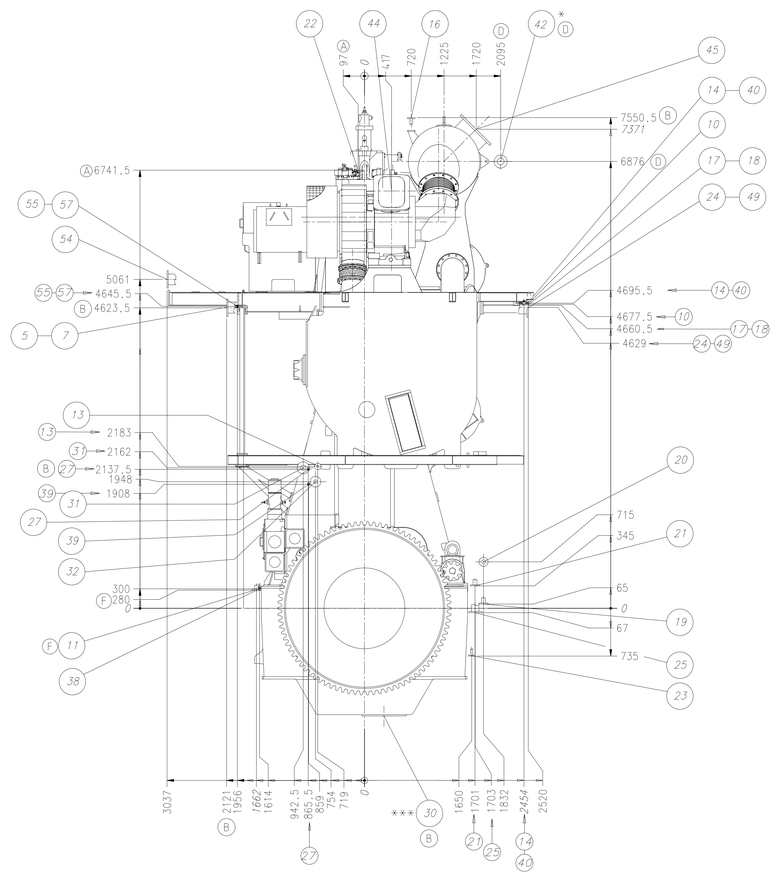

Alle Flanschanschluesse am Motor sind mit Gegenflanschen versehen (Blindflansch), ausgenommen der Anschluss fuer den Gasaustritt am Turbolader. Die Blindflansche sind nach dem betreffenden Rohrdurchmesser des Werftanschlusses aufzubohren.
THE PIPE CONNECTIONS ON THE ENGINE ARE SUPPLIED WITH MATING FLANGES (BLIND), WITH EXCEPTION OF THE TURBOCHARGER EXHAUST GAS OUTLET. BLIND FLANGES TO BE DRILLED TO MATCH PIPE DIA SUPPLIED BY THE SHIPYARD.

Die Gewinde-Anschluesse werden komplett geliefert
SCREWED CONNECTIONS ARE SUPPLIED COMPLETE

1 x A165-L / 1 x A265-L (C)

Gasaustritt-Stellung GAS OUTLET POSITION	x	y
0°	1842	6448
15°	1978	6431
30°	2105	6378
45°	2213	6294

(44) 1:20

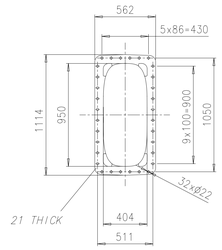

(45) 1:20

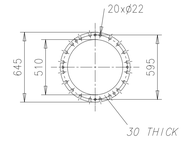

(53) 1:2

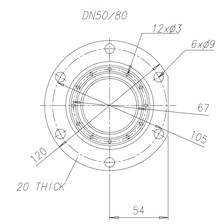

Anschlussprinzip siehe Stueckliste Pos.002
CONNECTION PRINCIPLE SEE PARTS LIST

(E) *4 SEE DAAD116127
(B) *** Final position to be defined by the shipyard in compliance with the specification in DG9722 ("Lubricating Oil System")
** ONLY FOR INTEGRATED CYL. LUBRICATION AUTOMATIC TRANSFER (iCAT)
* Optionale Ausführung (wenn verlangt)
OPTIONAL EXECUTION (IF REQUIRED)

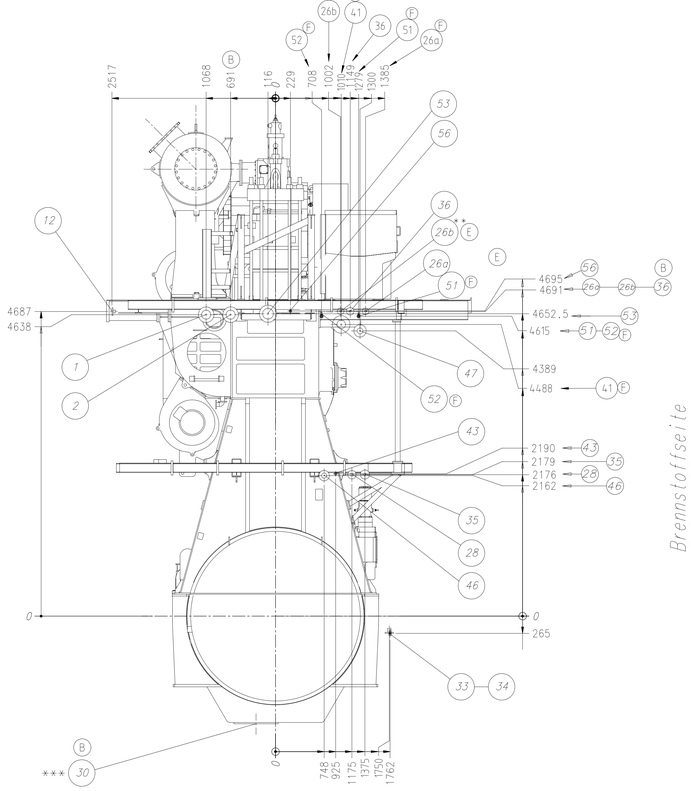

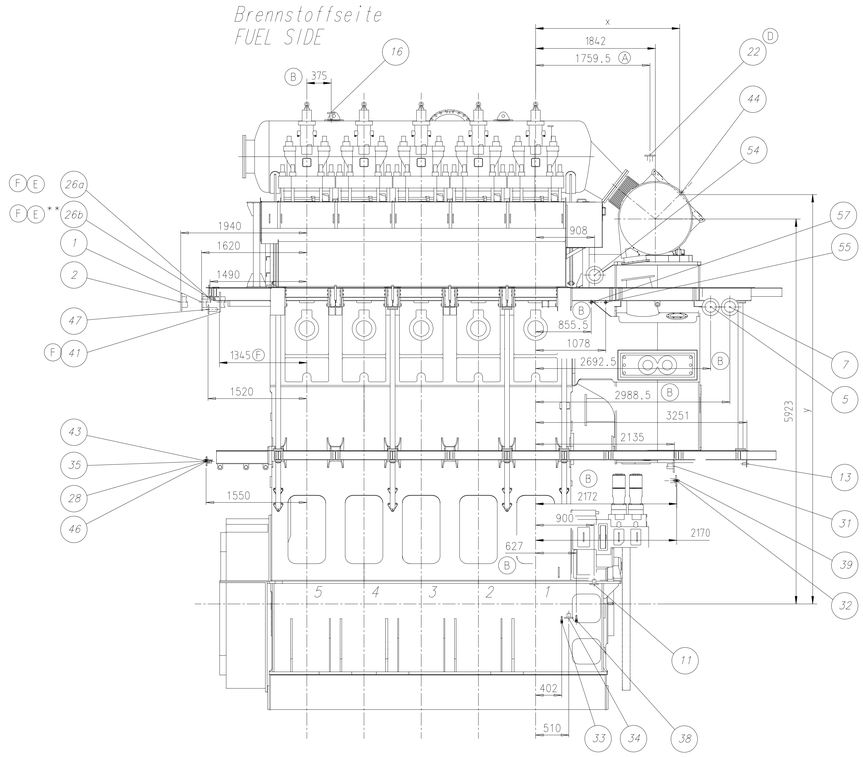

Qty.	SEQ NO	Material ID	Material Name / Dimension, Doc	Standard or Drawing	Basic Material / Material Standard	Weight GR/NET
Net Weight 0,001						
1	002	FAAD147122	FLANGE DIMENSIONS	DAAD045822		0,01
1	001	107.390.729.500	FLANGE DIMENSIONS	107.390.729		0,001

Quantity PER ENGINE

DAAD339851 Free Assy. for ...

Q-Code XXXXX
Standard JIS
Main Dw. H

Modif.	Number	Drawn date	Number	Drawn date	Number	Drawn date
C	EAAD093050	17.04.2020	D EAAD094008	27.07.2020	E EAAD095956	02.02.2021
F	EAAD096095	12.03.2021				

Material ID

WIN GD Winterthur Gas & Diesel

Product SRT-flex50DF

PIPE CONNECTION PLAN

Rohranschlussplan

Units mm kg NX | Basic Material | Net Weight

Made 26.09.2019 Ravi | Scale 1:33 | Size A0 | Page 1/2 | Material ID

Chkd 02.10.2019 sth017 Thalmann | Design Group 8020

Appd 02.10.2019 mda006 Dacic | Drawing ID DAAD121695 | Rev. F

SURFACE PROTECTION SEE GROUP 0344
TOLERANCING PRINCIPLE ISO8015

Copyright Winterthur Gas & Diesel Ltd. All rights reserved. By taking possession of the drawing the recipient recognizes and honours these rights. Neither the whole nor any part of this drawing may be used in any way for construction, fabrication, marketing or any other purpose nor copied in any way nor made accessible to third parties without the previous written consent of Winterthur Gas & Diesel Ltd.

				Ko.Gr. KO.GR.	Leitungs-Anschluesse PIPE-CONNECTIONS: Freies Ende FREE END	Antriebseite DRIVING END	Abgasseite EXHAUST SIDE	Brennstoffseite FUEL SIDE
1		Kuehlwasserleitung Zylindereinsatz Eintritt COOLING WATER PIPE CYLINDER LINER INLET	DN 125 PN 5	8305	X			
2		Zylinderkuehlwasserleitung Austritt CYLINDER COOLING WATER PIPE OUTLET	DN 125 PN 5	8310	X			
5		SLK Leitung Kuehlwasser Eintritt SAC PIPE COOLING WATER INLET	DN 150 PN 5	8335				X
7		SLK Leitung Kuehlwasser Austritt SAC PIPE COOLING WATER OUTLET	DN 150 PN 5	8335				X
10		Sammelleitung Kondenswasser SLK Entlüftung Austritt COLLEC. MAIN CONDENSATE WATER SAC VENTING OUTLET	DN 50 PN 5	8357			X	
11		Oelablaufleitung Versorgungseinheit Austritt OIL PIPE DRAIN SUPPLY UNIT OUTLET	DN 40 PN 5	8454				X
12		Kuehlwasser Entleerungsleitung COOLING WATER DRAIN PIPE	DN 32 PN 5	8313			X	
13		Entlueftung/Entleerung SLK VENTING/DRAIN SAC	DN 25 PN 5	8314		X		
14	ø25x2	Wasser-/Luftltg. Reinigungsanlage (Wasseranschluss) WATER/AIR PIPE CLEANING PLANT (WATER CONNECTIION)	ø25 PN 16	8338			X	
16		Zylinderkuehlwasserleitung Entlüftung CYLINDER COOLING WATER PIPE VENTING	DN 32 PN 16	8611	X			
17		Leckoelleitung Auslassventil DE OIL LEAKAGE PIPE EXAUST VALVE DE	DN 65 PN 5	8480			X	
18		Oelleitung Turbolader Austritt OIL PIPE TURBOCHARGER OUTLET	DN 65 PN 5	8431			X	
19		Sammelleitung Kondenswasser SLK Kondenswasser Austritt COLLEC. MAIN CONDENSATE WATER SAC CONDENSATE WATER OUTLET	DN 50 PN 5	8357		X		
20		Sammelleitung Kondenswasser SLK Waschwasser Austritt COLLEC. MAIN CONDENSATE WATER SAC WASHING WATER OUTLET	DN 50 PN 5	8357			X	
21		Sammelltg. Oelwasser Wasserabsch. COLLECTOR MAIN OILWATER WATER SEP.	DN 50 PN 5	8352			X	
22		Oelsystem TL Entlüftung OIL SYSTEM TC VENTING	DN 65 PN 5	8610		X		
23		Sammelleitung Leckoel Grundplatte COLLECTOR MAIN LEAKAGE BEDPLATE	DN 25 PN 5	8463			X	
24		Oelleitung Eintritt OIL PIPE INLET	DN 125 PN 10	8406			X	
25		Sammelltg. Schmutzoel Kolbenu.seite COLLECTOR MAIN DIRTY OIL PIST.U.SIDE	DN 100 PN 5	8487			X	
(F) 26a		Zylinderschmieroelleitung Eintritt CYL. LUBRICATING OIL PIPE INLET (HIGH BN)	DN 25 PN 5	FlexLub 8475	X			X
(F) 26b **		Zylinderschmieroelleitung Eintritt CYL. LUBRICATING OIL PIPE INLET (LOW BN)	DN 25 PN 5	FlexLub 8475	X			X
27	ø25x2	Sammelleitung Automatikfilter Automatikfilter FLUSHING OIL PIPE AUTOMATIC FILTER OUTLET	DN 20 PN 10	8445		X		
28		Sammelleitung Leckoel Stopfbuechse COLL. MAIN LEAKAGE OIL GLAND BOX	DN 40 PN 5	8488	X			
(B) 29 *		Grundplatte Oelablauf (Horizontal) BEDPLATE OIL DRAIN (HORIZONTAL)	DN PN	1110	Nicht benoetigt NOT USED			
(B) 30 ***		Grundplatte Oelablauf (Vertikal) BEDPLATE OIL DRAIN (VERTICAL)	DN PN	1110	X	X	X	
31		Brennstoff Eintritt FUEL OIL INLET	DN 65 PN 16	8702		X		

				Ko.Gr. KO.GR.	Leitungs-Anschluesse PIPE-CONNECTIONS: Freies Ende FREE END	Antriebseite DRIVING END	Abgasseite EXHAUST SIDE	Brennstoffseite FUEL SIDE
32		Brennstoff Austritt FUEL OIL OUTLET	DN 50 PN 16	8704		X		
(B) 33		Leckbrennstoffleitung RAIL-UNIT FUEL LEAKAGE PIPE RAIL-UNIT	DN 20 PN 5	8740				X
34		Leckbrennstoffltg. Einspritzventil FUEL LEAKAGE PIPE INJECTION VALVE	DN 40 PN 5	8741		X		X
35		Feuerloeschleitung FIRE EXTINGUISHING PIPE	DN 32 PN 16	8830	X			
36		Heizltg. Brennstoff Eintr/Austr Eintritt HEATING PIPE FUEL INLET/OUTLET INLET	DN 25 PN 16	8810	X			
38	Ø20x2	Heizltg. Brennstoff Eintr/Austr Austritt HEATING PIPE FUEL INLET/OUTLET OUTLET	DN 15 PN 16	8810				X
39	Ø20x2	Heizltg. Brennstoff Eintr/Austr Austritt HEATING PIPE FUEL INLET/OUTLET OUTLET	DN 15 PN 16	8810		X		
40	ø25x2	Wasser-/Luftltg. Reinigungsanlage (Luftanschluss) WATER/AIR PIPE CLEANING PLANT (AIR CONNECTION)	DN 20 PN 16	8338			X	
(F) 41		Anlassluftleitung Eintritt STARTING AIR PIPE INLET	DN 125 PN 40	8605	X			X
(E)(D) 42 *		Abgase-Abblaseventil Austritt EXHAUST WASTE GATE OUTLET	IF USED, SEE DAAD116127	8135	IF USED, SEE DAAD116127			
43	Ø20x2	Steuerluftversorgung 6.5 bar: A1 CONTROL AIR SUPPLY	DN 15 PN 8	8630	X			
44	siehe Zchng 1 SEE DRAWING 1	Turbolader Gasaustritt TURBOCHARGER GAS OUTLET		6506 6509		X		
45	siehe Zchng 1 SEE DRAWING 1	Bypass zur Auspuffleitung (für Motoren mit einem Turbolader) EXHAUST BY PASS (FOR ENGINES WITH ONE TURBOCHARGER)		8103 8108			X	
46		Entlueftungsltg. Kurbelgehaeuse VENTING PIPE CRANKCASE	DN 65 PN 5	8608	X			
47		Oel Zu/Ablaufleitung Servosystem Austritt OIL INLET/DRAIN PIPE SERVO SYSTEM OUTLET	DN 50 PN 5	8448	X			
49		Oelleitung Kreuzkopf Eintritt OIL PIPE CROSSHEAD INLET	DN 125 PN 16	8455			X	
(F) 51	ø20x2	Hochdruckltg. Pilot Ventiel Eintritt HIGH PRESSURE PIPE FUEL PILOT VALVE INLET	DN 15 PN 16	8790	X		X	
(F) 52	ø25x2	Hochdruckltg. Pilot Ventiel Austritt HIGH PRESSURE PIPE FUEL PILOT VALVE OUTLET	DN 20 PN 16	8790	X		X	
53	siehe Zchng 1 SEE DRAWING 1	Gas verteil Leitung Eintritt GAS DISTRIBUTOR PIPE INLET		8903	X			
54		Gas Entlüftungsleitung DE Austritt GAS VENTING PIPE DE OUTLET	DN 80 PN 16	8910				X
55	ø25x2	Gas Entlüftungsleitung DE Eintritt GAS VENTING PIPE DE INLET	DN 20 PN 16	8910				X
(B) 56	ø25x2	Gas Entlüftungsleitung FE Austritt GAS VENTING PIPE FE OUTLET	DN 20 PN 16	8910	X			
(B) 57	ø25x2	Gas Entlüftungsleitung DE Austritt GAS VENTING PIPE DE OUTLET	DN 20 PN 16	8911				X

Abmasse der Flansche siehe Stückliste Pos.001 + 002
FLANGE DIMENSION SEE PARTS LIST

*** Final position to be defined by the shipyard in compliance with the specification in DG9722 ("Lubricating Oil System") (B)

** ONLY FOR INTEGRATED CYL. LUBRICATION AUTOMATIC TRANSFER (iCAT)

* Optionale Ausfuehrung (wenn verlangt)
OPTIONAL EXECUTION (IF REQUIRED)

(C) 1 x A165-L / 1 x A265-L

SURFACE PROTECTION SEE GROUP 0344
TOLERANCING PRINCIPLE ISO8015

Free space for lic.

Q-Code XXXXX
Standard JIS
Main Drw. H

Modif.	Number	Drawn date	Number	Drawn date	Number	Drawn date	Number	Drawn date
C	EAAD093050	17.04.2020	D EAAD094008	27.07.2020	E EAAD095956	02.02.2021	F EAAD096095	12.03.2021

WIN GD Winterthur Gas & Diesel

Product 5RT-flex50DF

PIPE CONNECTION PLAN
Rohranschlussplan

Units mm kg | NX | Basic Material | Net Weight

Made 26.09.2019 Ravi
Chkd 02.10.2019 sth017 Thalmann
Appd 02.10.2019 mda006 Dacic

Scale 1:1 | Size A1 | Page 2/2 | Material ID
Design Group 8020
Drawing ID DAAD121695 | Rev. F

Approved

ILD - INSTALLATION DRAWING - Internal

Copyright Winterthur Gas & Diesel Ltd. All rights reserved. By taking possession of the drawing the recipient recognizes and honours these rights. Neither the whole nor any part of this drawing may be used in any way for construction, fabrication, marketing or any other purpose nor copied in any way nor made accessible to third parties without the previous written consent of Winterthur Gas & Diesel Ltd.

DOWNLOAD
"DXF FILE"

Beim Montieren der Leitung ist die Waermeausdehnung von 5 mm gegen Freies Ende von der theor. Mitte aus zu beruecksichtigen
WHEN ASSEMBLING THE PIPING THE THERMAL EXPANSION OF 5 MM TOWARDS THE FREE END FROM THE THEORETICAL CENTRE IS TO BE CONSIDERED

Alle Flanschanschluesse am Motor sind mit Gegenflanschen versehen (Blindflansch), ausgenommen der Anschluss fuer den Gasaustritt am Turbolader. Die Blindflansche sind nach dem betreffenden Rohrdurchmesser des Werftanschlusses aufzubohren.
THE PIPE CONNECTIONS ON THE ENGINE ARE SUPPLIED WITH MATING FLANGES (BLIND), WITH EXCEPTION OF THE TURBOCHARGER EXHAUST GAS OUTLET. BLIND FLANGES TO BE DRILLED TO MATCH PIPE DIA SUPPLIED BY THE SHIPYARD.

Die Gewinde-Anschluesse werden komplett geliefert
SCREWED CONNECTIONS ARE SUPPLIED COMPLETE

1 x MET48 MB

DIMENSIONS FOR REFERENCE ONLY. TECHNICAL MODIFICATIONS RESERVED. LATER ADAPTATIONS ARE POSSIBLE BASED ON PROJECT REQUIREMENTS AND RELATED DETAIL DESIGN.
THIS PIPE CONNECTION PLAN MAY NOT BE USED FOR FINAL DESIGN!

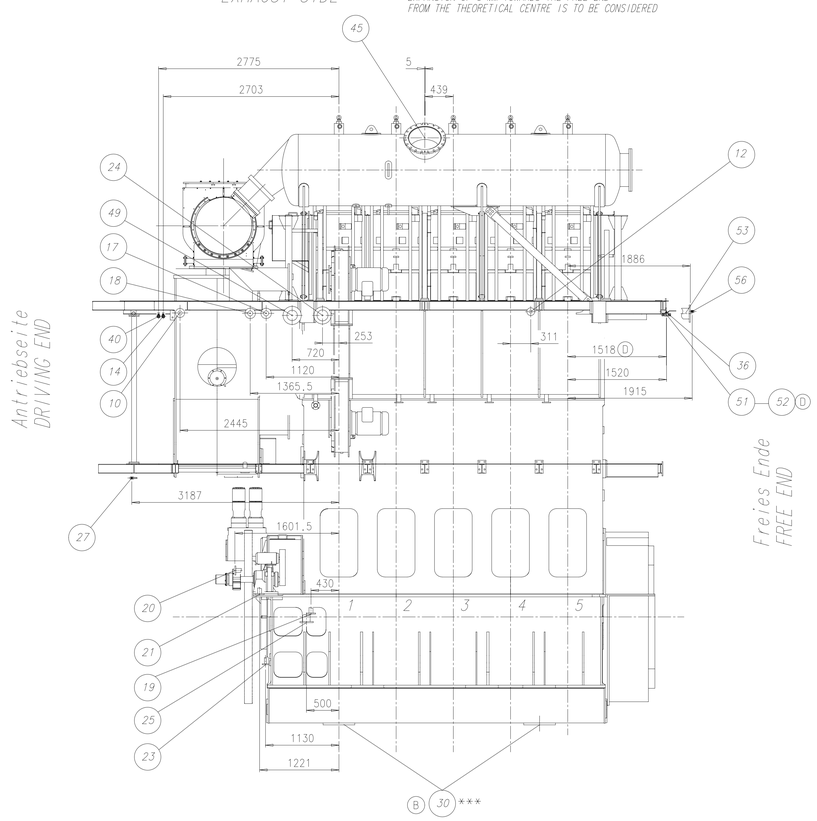

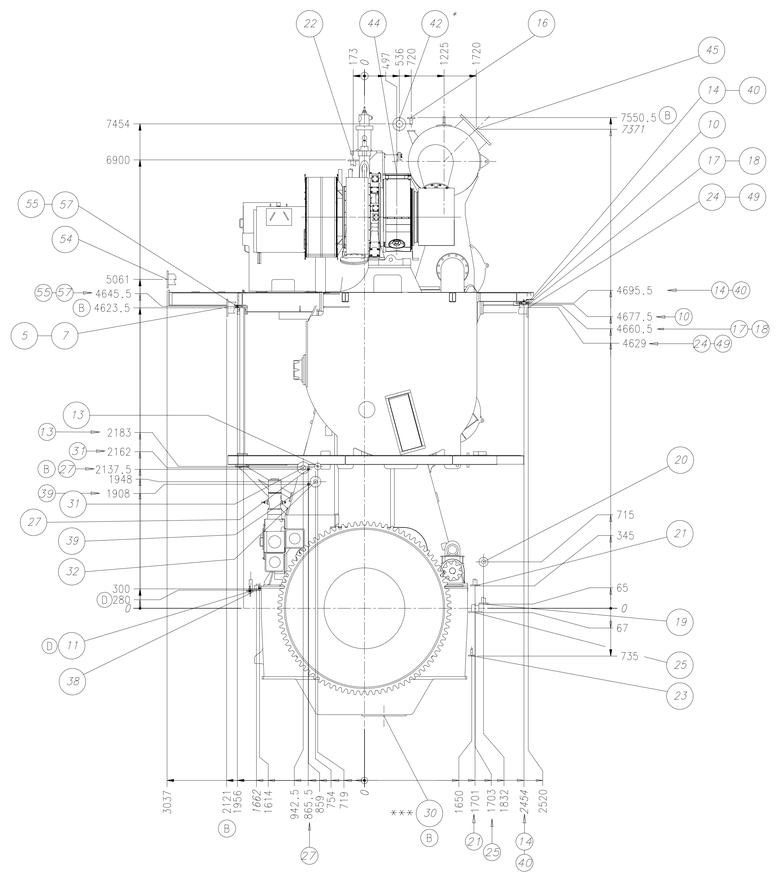

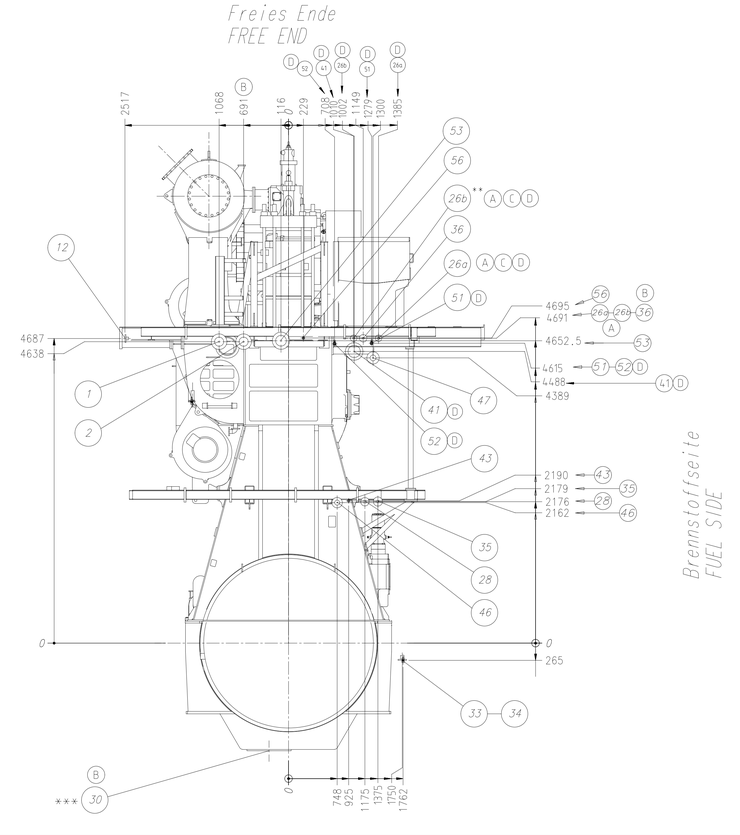

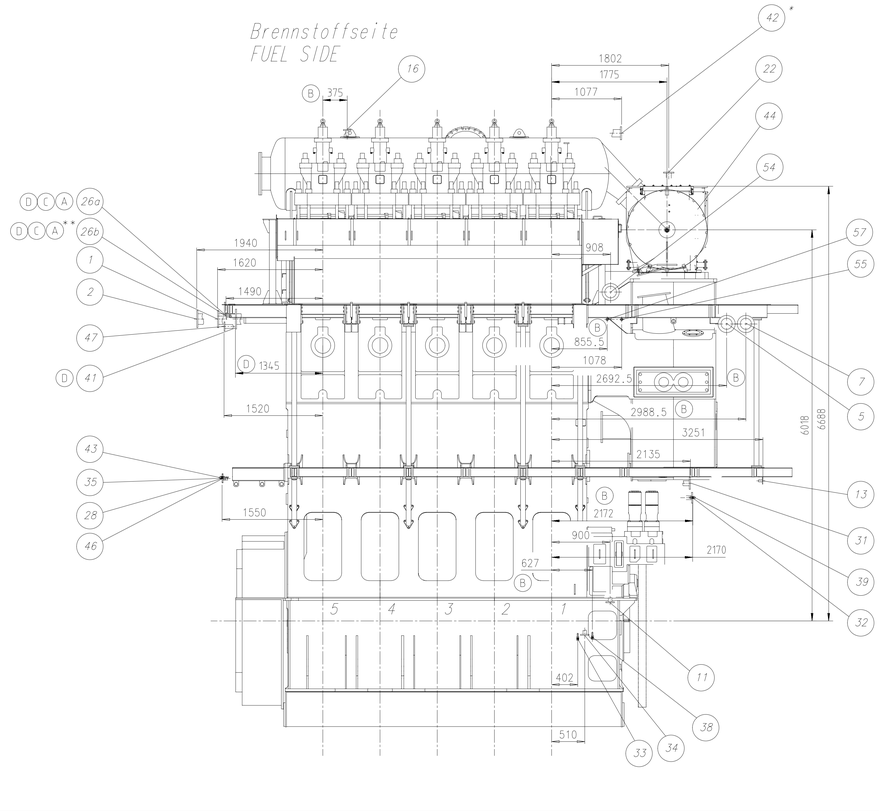

44 1:20

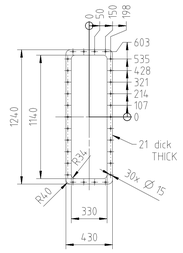

45 1:20

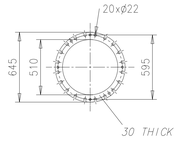

53 1:2

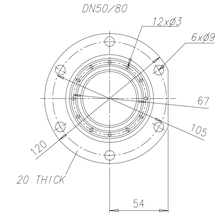

Anschlussprinzip siehe Stueckliste Pos.002
CONNECTION PRINCIPLE SEE PARTS LIST

(B) *** Final position to be defined by the shipyard in compliance with the specification in DG9722 ("Lubricating Oil System")

(A) ** ONLY FOR INTEGRATED CYL. LUBRICATION AUTOMATIC TRANSFER (iCAT)

* Optionale Ausführung (wenn verlangt)
OPTIONAL EXECUTION (IF REQUIRED)

Net Weight					
0,001					
1	002	PAAD147122	FLANGE DIMENSIONS	DAAD045822	0,01
1	001	107.390.729.500	FLANGE DIMENSIONS	107.390.729	0,001

Quantity PER ENGINE	SEQ NO	Material ID	Material Name / Dimension, Occ	Standard or Drawing	Basic Material / Material Standard	Weight GR/NET

PAAD333054 — Free Alloy (for ID)

Model											
Material ID	A	EAAD091070	03.10.2019	B	EAAD091568	06.03.2020	C	EAAD095956	02.02.2021	D	EAAD096095	12.03.2021
		Number	Drawn date		Number	Drawn date		Number	Drawn date		Number	Drawn date

Q-Code XXXXX
Standard JIS
Main Dw. H

WIN GD Winterthur Gas & Diesel

Product SRT-flex50DF

PIPE CONNECTION PLAN

Rohranschlussplan

Units	mm kg	NX	Basic Material			Net Weight
Made	09.07.2019	Abraham Dasari	Scale 1:33	Size A0	Page 1/2	Material ID
Chkd	22.08.2019	hdo002 Dörre	Design Group 8020			
Appd	22.08.2019	sth017 Thalmann	Drawing ID DAAD118614			Rev. D

SURFACE PROTECTION SEE GROUP 0344
TOLERANCING PRINCIPLE ISO8015

Copyright Winterthur Gas & Diesel Ltd. All rights reserved. By taking possession of the drawing the recipient recognizes and honours these rights. Neither the whole nor any part of this drawing may be used in any way for construction, fabrication, marketing or any other purpose nor copied in any way nor made accessible to third parties without the previous written consent of Winterthur Gas & Diesel Ltd.

EU INSTALLATION DRAWING — WARNING

				Ko.Gr. KO.GR.	Leitungs-Anschluesse PIPE-CONNECTIONS: Freies Ende FREE END	Antriebseite DRIVING END	Abgasseite EXHAUST SIDE	Brennstoffseite FUEL SIDE
1		Kuehlwasserleitung Zylindereinsatz Eintritt COOLING WATER PIPE CYLINDER LINER INLET	DN 125 PN 5	8305	X			
2		Zylinderkuehlwasserleitung Austritt CYLINDER COOLING WATER PIPE OUTLET	DN 125 PN 5	8310	X			
5		SLK Leitung Kuehlwasser Eintritt SAC PIPE COOLING WATER INLET	DN 150 PN 5	8335				X
7		SLK Leitung Kuehlwasser Austritt SAC PIPE COOLING WATER OUTLET	DN 150 PN 5	8335				X
10		Sammelleitung Kondenswasser SLK Entlüftung Austritt COLLEC. MAIN CONDENSATE WATER SAC VENTING OUTLET	DN 50 PN 5	8357			X	
11		Oelablaufleitung Versorgungseinheit Austritt OIL PIPE DRAIN SUPPLY UNIT OUTLET	DN 40 PN 5	8454				X
12		Kuehlwasser Entleerungsleitung COOLING WATER DRAIN PIPE	DN 32 PN 5	8313			X	
13		Entlueftung/Entleerung SLK VENTING/DRAIN SAC	DN 25 PN 5	8314		X		
14	ø25x2	Wasser-/Luftltg. Reinigungsanlage (Wasseranschluss) WATER/AIR PIPE CLEANING PLANT (WATER CONNECTIION)	ø25 PN 16	8338			X	
16		Zylinderkuehlwasserleitung Entlüftung CYLINDER COOLING WATER PIPE VENTING	DN 32 PN 16	8611	X			
17		Leckoelleitung Auslassventil DE OIL LEAKAGE PIPE EXAUST VALVE DE	DN 65 PN 5	8480			X	
18		Oelleitung Turbolader Austritt OIL PIPE TURBOCHARGER OUTLET	DN 65 PN 5	8431			X	
19		Sammelleitung Kondenswasser SLK Kondenswasser Austritt COLLEC. MAIN CONDENSATE WATER SAC CONDENSATE WATER OUTLET	DN 50 PN 5	8357		X		
20		Sammelleitung Kondenswasser SLK Waschwasser Austritt COLLEC. MAIN CONDENSATE WATER SAC WASHING WATER OUTLET	DN 50 PN 5	8357			X	
21		Sammelltg. Oelwasser Wasserabsch. COLLECTOR MAIN OILWATER WATER SEP.	DN 50 PN 5	8352			X	
22		Oelsystem TL Entlüftung OIL SYSTEM TC VENTING	DN 65 PN 5	8610		X		
23		Sammelleitung Leckoel Grundplatte COLLECTOR MAIN LEAKAGE BEDPLATE	DN 25 PN 5	8463			X	
24		Oelleitung Eintritt OIL PIPE INLET	DN 125 PN 10	8406			X	
25		Sammelltg. Schmutzoel Kolbenu.seite COLLECTOR MAIN DIRTY OIL PIST.U.SIDE	DN 100 PN 5	8487			X	
(D) (A) 26a		Zylinderschmieroelleitung Eintritt CYL. LUBRICATING OIL PIPE INLET (HIGH BN)	DN 25 PN 5	FlexLub 8475	X			X
(D) (A) ** 26b		Zylinderschmieroelleitung Eintritt CYL. LUBRICATING OIL PIPE INLET (LOW BN)	DN 25 PN 5	FlexLub 8475	X			X
27	ø25x2	Sammelleitung Automatikfilter Automatikfilter FLUSHING OIL PIPE AUTOMATIC FILTER OUTLET	DN 20 PN 10	8445		X		
28		Sammelleitung Leckoel Stopfbuechse COLL. MAIN LEAKAGE OIL GLAND BOX	DN 40 PN 5	8488	X			
(B) * 29		Grundplatte Oelablauf (Horizontal) BEDPLATE OIL DRAIN (HORIZONTAL)	DN PN	1110	Nicht benoetigt NOT USED			
(B) *** 30		Grundplatte Oelablauf (Vertikal) BEDPLATE OIL DRAIN (VERTICAL)	DN PN	1110	X	X	X	
31		Brennstoff Eintritt FUEL OIL INLET	DN 65 PN 16	8702		X		

				Ko.Gr. KO.GR.	Leitungs-Anschluesse PIPE-CONNECTIONS: Freies Ende FREE END	Antriebseite DRIVING END	Abgasseite EXHAUST SIDE	Brennstoffseite FUEL SIDE
32		Brennstoff Austritt FUEL OIL OUTLET	DN 50 PN 16	8704		X		
(B) 33		Leckbrennstoffleitung RAIL-UNIT FUEL LEAKAGE PIPE RAIL-UNIT	DN 20 PN 5	8740				X
34		Leckbrennstoffltg. Einspritzventil FUEL LEAKAGE PIPE INJECTION VALVE	DN 40 PN 6	8741		X		X
35		Feuerloeschleitung FIRE EXTINGUISHING PIPE	DN 32 PN 16	8830	X			
36		Heizltg. Brennstoff Eintr/Austr Eintritt HEATING PIPE FUEL INLET/OUTLET INLET	DN 25 PN 16	8810	X			
38	Ø20x2	Heizltg. Brennstoff Eintr/Austr Austritt HEATING PIPE FUEL INLET/OUTLET OUTLET	DN 15 PN 16	8810				X
39	Ø20x2	Heizltg. Brennstoff Eintr/Austr Austritt HEATING PIPE FUEL INLET/OUTLET OUTLET	DN 15 PN 16	8810		X		
40	Ø25x2	Wasser-/Luftltg. Reinigungsanlage (Luftanschluss) WATER/AIR PIPE CLEANING PLANT (AIR CONNECTION)	DN 20 PN 16	8338			X	
(D) 41		Anlassluftleitung Eintritt STARTING AIR PIPE INLET	DN 125 PN 40	8605	X			X
42 *		Ablassventil fuer "WASTE GATE FOR LLT" EXHAUST WASTE GATE FOR LLT (LOW LOAD TUNING)	DN 150 PN 10	8135		X		
43	Ø20x2	Steuerluftversorgung 6.5 bar: A1 CONTROL AIR SUPPLY	DN 15 PN 8	8630	X			
44	siehe Zchng 1 SEE DRAWING 1	Turbolader Gasaustritt TURBOCHARGER GAS OUTLET		6506 6509		X		
45	siehe Zchng 1 SEE DRAWING 1	Bypass zur Auspuffleitung (für Motoren mit einem Turbolader) EXHAUST BY PASS (FOR ENGINES WITH ONE TURBOCHARGER)		8103 8108			X	
46		Entlueftungsltg. Kurbelgehaeuse VENTING PIPE CRANKCASE	DN 65 PN 5	8608	X			
47		Oel Zu/Ablaufleitung Servosystem Austritt OIL INLET/DRAIN PIPE SERVO SYSTEM OUTLET	DN 50 PN 5	8448	X			
49		Oelleitung Kreuzkopf Eintritt OIL PIPE CROSSHEAD INLET	DN 125 PN 16	8455			X	
(D) 51	ø20x2	Hochdruckltg. Pilot Ventiel Eintritt HIGH PRESSURE PIPE FUEL PILOT VALVE INLET	DN 15 PN 16	8790	X		X	
(D) 52	ø25x2	Hochdruckltg. Pilot Ventiel Austritt HIGH PRESSURE PIPE FUEL PILOT VALVE OUTLET	DN 20 PN 16	8790	X		X	
53	siehe Zchng 1 SEE DRAWING 1	Gas verteil Leitung Eintritt GAS DISTRIBUTOR PIPE INLET		8903	X			
54		Gas Entlüftungsleitung DE Austritt GAS VENTING PIPE DE OUTLET	DN 80 PN 16	8910				X
55	ø25x2	Gas Entlüftungsleitung DE Eintritt GAS VENTING PIPE DE INLET	DN 20 PN 16	8910				X
(B) 56	ø25x2	Gas Entlüftungsleitung FE Austritt GAS VENTING PIPE FE OUTLET	DN 20 PN 16	8910	X			
(B) 57	ø25x2	Gas Entlüftungsleitung DE Austritt GAS VENTING PIPE DE OUTLET	DN 20 PN 16	8911				X

Abmasse der Flansche siehe Stückliste Pos.001 + 002
FLANGE DIMENSION SEE PARTS LIST

*** Final position to be defined by the shipyard in compliance with the specification in DG9722 ("Lubricating Oil System") (B)

(A) ** ONLY FOR INTEGRATED CYL. LUBRICATION AUTOMATIC TRANSFER (iCAT)

* Optionale Ausfuehrung (wenn verlangt)
OPTIONAL EXECUTION (IF REQUIRED)

1 x MET48 MB

SURFACE PROTECTION SEE GROUP 0344
TOLERANCING PRINCIPLE ISO8015

Free space for lic.

Q-Code XXXXX
Standard JIS
Main Drw. H

Modif.	Number	Drawn date	Number	Drawn date	Number	Drawn date	Number	Drawn date
A	EAAD091070	03.10.2019	B EAAD091568	06.03.2020	C EAAD095956	02.02.2021	D EAAD096095	12.03.2021

WIN GD Winterthur Gas & Diesel

Product 5RT-flex50DF

PIPE CONNECTION PLAN
Rohranschlussplan

Units mm kg | NX | Basic Material | Net Weight

Made	09.07.2019	Abraham Dasari	Scale 1:1	Size A1	Page 2/2
Chkd	22.08.2019	hdo002 Dörre	Design Group 8020	Material ID	
Appd	22.08.2019	sth017 Thalmann	Drawing ID DAAD118614	Rev. D	

Approved

ILD - INSTALLATION DRAWING - Internal

Copyright Winterthur Gas & Diesel Ltd. All rights reserved. By taking possession of the drawing the recipient recognizes and honours these rights. Neither the whole nor any part of this drawing may be used in any way for construction, fabrication, marketing or any other purpose nor copied in any way nor made accessible to third parties without the previous written consent of Winterthur Gas & Diesel Ltd.

ISO

PN	DN	OUT.DIA.	THICK	DIM. FOR SCREWS			
6 bar	25	100	14	75	4	M10	11
	32	120	16	90	4	M12	14
	40	130	16	100	4	M12	14
	50	140	16	110	4	M12	14
	65	160	16	130	4	M12	14
	80	190	18	150	4	M16	18
	100	210	18	170	4	M16	18
	125	240	20	200	8	M16	18
	150	265	20	225	8	M16	18
	200	320	22	280	8	M16	18
	250	375	24	335	12	M16	18
	300	440	24	395	12	M20	22
	350	490	26	445	12	M20	22
	400	540	28	495	16	M20	22
	450	595	30	550	16	M20	22
	500	645	30	600	20	M20	22

PN	DN	OUT.DIA.	THICK	DIM. FOR SCREWS			
16 bar	25	115	16	85	4	M12	14
	32	140	18	100	4	M16	18
	40	150	18	110	4	M16	18
	50	165	19	125	4	M16	18
	65	185	20	145	8	M16	18
	80	200	20	160	8	M16	18
	100	220	22	180	8	M16	18
	125	250	22	210	8	M16	18
	150	285	24	240	8	M20	22
	200	340	26	295	12	M20	22
	250	405	32	355	12	M24	26
	300	460	32	410	12	M24	26
	350	520	35	470	16	M24	26
	400	580	38	525	16	M27	30
	450	640	42	585	20	M27	30
	500	715	46	650	20	M30	33

PN	DN	OUT.DIA.	THICK	DIM. FOR SCREWS			
10 bar	25	115	16	85	4	M12	14
	32	140	18	100	4	M16	18
	40	150	18	110	4	M16	18
	50	165	19	125	4	M16	18
	65	185	20	145	8	M16	18
	80	200	20	160	8	M16	18
	100	220	22	180	8	M16	18
	125	250	22	210	8	M16	18
	150	285	24	240	8	M20	22
	200	340	24	295	8	M20	22
	250	395	26	350	12	M20	22
	300	445	26	400	12	M20	22
	350	505	28	460	16	M20	22
	400	565	32	515	16	M24	26
	450	615	38	565	20	M24	26
	500	670	38	620	20	M24	26

PN	DN	OUT.DIA.	THICK	DIM. FOR SCREWS			
40 bar	25	115	16	85	4	M12	14
	32	140	18	100	4	M16	18
	40	150	18	110	4	M16	18
	50	165	20	125	4	M16	18
	65	185	22	145	8	M16	18
	80	200	24	160	8	M16	18
	100	235	26	190	8	M20	22
	125	270	28	220	8	M24	26
	150	300	30	250	8	M24	26
	200	375	36	320	12	M27	30
	250	450	44	385	12	M30	33
	300	515	48	450	16	M30	33
	350	580	54	510	16	M33	36
	400	660	60	585	16	M36	39

JIS

PN	DN	OUT.DIA.	THICK	DIM. FOR SCREWS			
5 bar	25	95	10	75	4	M10	12
	32	115	12	90	4	M12	15
	40	120	12	95	4	M12	15
	50	130	14	105	4	M12	15
	65	155	14	130	4	M12	15
	80	180	14	145	4	M16	19
	100	200	16	165	8	M16	19
	125	235	16	200	8	M16	19
	150	265	18	230	8	M16	19
	200	320	20	280	8	M20	23
	250	385	22	345	12	M20	23
	300	430	22	390	12	M20	23
	350	480	24	435	12	M22	25
	400	540	24	495	16	M22	25
	450	605	24	555	16	M22	25
	500	655	24	605	20	M22	25

PN	DN	OUT.DIA.	THICK	DIM. FOR SCREWS			
16 bar	25	125	14	90	4	M16	19
	32	135	16	100	4	M16	19
	40	140	16	105	4	M16	19
	50	155	16	120	8	M16	19
	65	175	18	140	8	M16	19
	80	200	20	160	8	M20	23
	100	225	22	185	8	M20	23
	125	270	22	225	8	M22	25
	150	305	24	260	12	M22	25
	200	350	26	305	12	M22	25
	250	430	28	380	12	M24	27
	300	480	30	430	16	M24	27
	350	540	34	480	16	M30	33
	400	605	38	540	16	M30	33
	450	675	40	605	20	M30	33
	500	730	42	660	20	M30	33

PN	DN	OUT.DIA.	THICK	DIM. FOR SCREWS			
10 bar	25	125	14	90	4	M16	19
	32	135	16	100	4	M16	19
	40	140	16	105	4	M16	19
	50	155	16	120	4	M16	19
	65	175	18	140	4	M16	19
	80	185	18	150	8	M16	19
	100	210	18	175	8	M16	19
	125	250	20	210	8	M20	23
	150	280	22	240	8	M20	23
	200	330	22	290	12	M20	23
	250	400	24	355	12	M22	25
	300	445	24	400	16	M22	25
	350	490	26	445	16	M22	25
	400	560	28	510	16	M24	27
	450	620	30	565	20	M24	27
	500	675	30	620	20	M24	27

PN	DN	OUT.DIA.	THICK	DIM. FOR SCREWS			
30 bar	25	130	20	95	4	M16	19
	32	140	22	105	4	M16	19
	40	160	22	120	4	M20	23
	50	165	22	130	8	M16	19
	65	200	26	160	8	M20	23
	80	210	28	170	8	M20	23
	100	240	32	195	8	M22	25
	125	275	36	230	8	M22	25
	150	325	38	275	12	M24	27
	200	370	42	320	12	M24	27
	250	450	48	390	12	M30	33
	300	515	52	450	16	M30	33
	350	560	54	495	16	M30	33
	400	630	60	560	16	M36	39

Substitute for:

PC	Q-Code	X	X	X	X	X

Modif											
	A	EAAD084180	04.10.2012								
		Number	Drawn Date		Number	Drawn Date		Number	Drawn Date		Number	Drawn Date

WÄRTSILÄ

Product
W-2S

Flange Dimensions

Made	19.09.2007	N. Brand	Main Drw.	Page 1 / 1	Material ID **107.390.729.500**
Chkd	27.09.2007	M. Frei	Design Group **8020**	Drawing ID **107.390.729**	Rev **A**
Appd	27.09.2007	B. Haag			

Copyright Wärtsilä. All rights reserved. By taking possession of the drawing, the recipient recognizes and honors these rights. Neither the whole nor any part of this drawing may be used in any way for construction, fabrication, marketing or any other purpose nor copied in any way nor made accessible to third parties without the previous written consent of Wärtsilä.

Download
"DXF file"

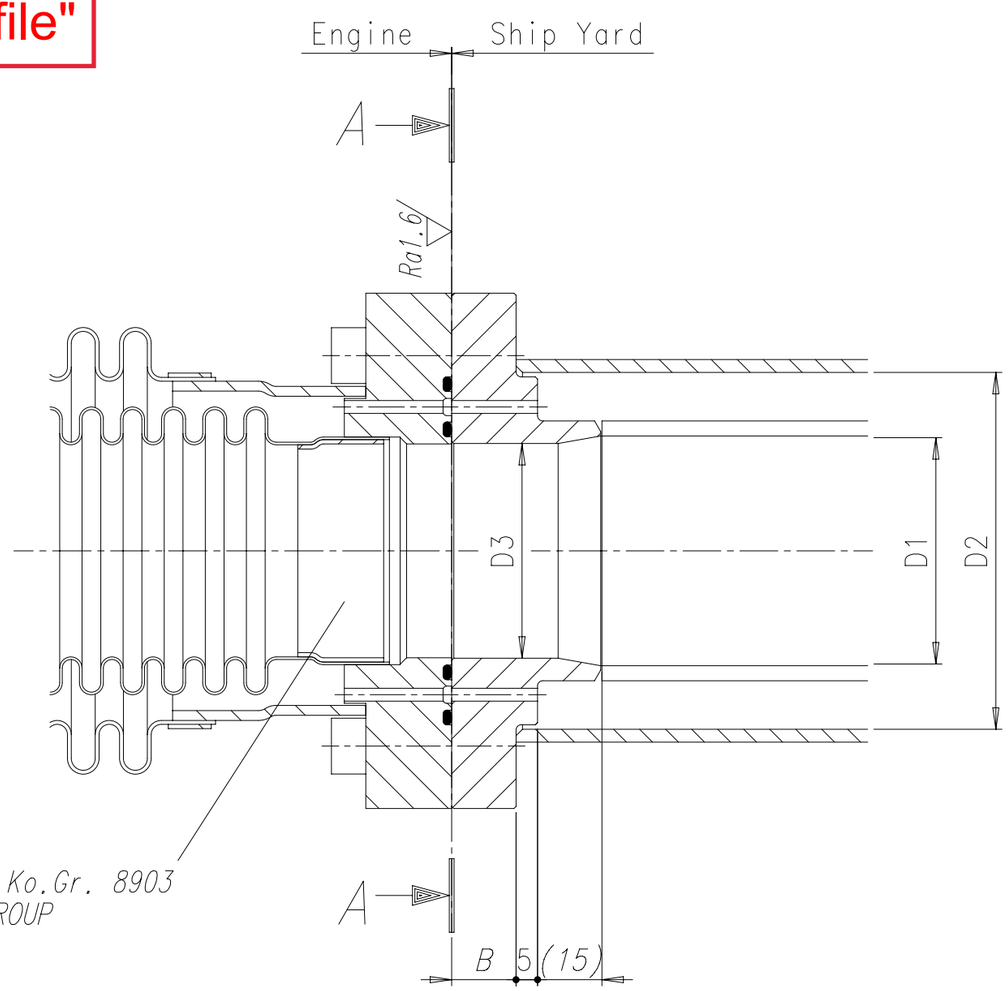

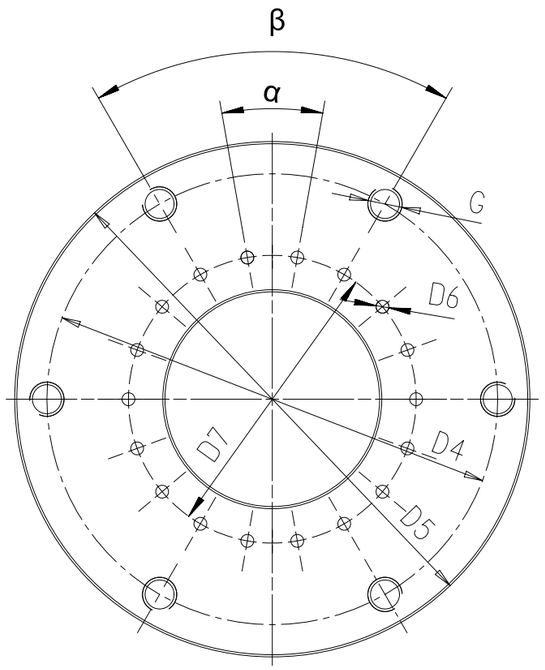

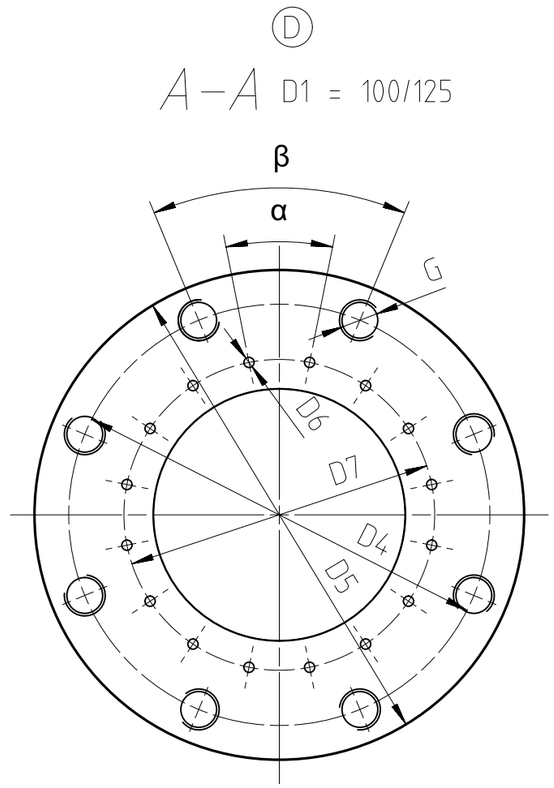

Ra12,5

Rohrleitungs Spezifikationen gemaess Ko.Gr.8903
PIPING SPECIFICATIONS ACCORDING GROUP

D1	D2	D3 (A)	D4	D5	D6 (C)	D7	B	G	α	β (D)
DN	DN	mm	mm	mm	mm	mm	mm			
40	65									
50	80	47	105	120	3	67	15	M8	20°	60°
80	100	79	155	180	5	104	20	M12	20°	60°
100	125	95	174	200	5	125	20	M12	22.5°	45°
125	150	127	206	240	5	152	25	M16	22.5°	45°

(C) (D) (E)

(F)

(D)

SURFACE PROTECTION SEE GROUP 0344
TOLERANCING PRINCIPLE ISO8015
GENERAL TOLERANCES ACCORDING TO ISO2768-mK

Free space for lic.

Q-Code XXXXX
Standard ISO; JIS
Main Drw.

Modif.	Number	Drawn date	Number	Drawn date	Number	Drawn date	Number	Drawn date
(C)	EAAD087857	13.12.2017	(D) EAAD090045	15.11.2018	(E) EAAD090428	14.06.2019	(F) EAAD095585	27.11.2020

WIN GD
Winterthur Gas & Diesel

Product W-2S

FLANGE DIMENSIONS

Flanschabmessungen

Units mm kg | NX | Basic Material | Net Weight 0,01

Made	17.10.2015 rsox04 R.W.Sola	Scale 1:1	Size A3 / Page 1/1 / Material ID PAAD147122
Chkd	04.09.2014 ihe003 Herceg	Design Group 8020	
Appd	05.09.2014 bha009 Haag		Drawing ID DAAD045822 / Rev. F

Approved

ILD - INSTALLATION DRAWING - Internal

Copyright Winterthur Gas & Diesel Ltd. All rights reserved. By taking possession of the drawing the recipient recognizes and honours these rights. Neither the whole nor any part of this drawing may be used in any way for construction, fabrication, marketing or any other purpose nor copied in any way nor made accessible to third parties without the previous written consent of Winterthur Gas & Diesel Ltd.

WinGD-5RT-flex50DF _Pipe Connection Plan

TRACK CHANGES

DATE	SUBJECT	DESCRIPTION
2018-02-26	DRAWING SET	First web upload
2019-11-28	DAAD049590 DAAD121695 DAAD118614 DAAD045822	Revised Pipe Connection Plan for Turbocharger Type 1xA165-L_ISO has been updated. New Pipe Connection Plan for Turbocharger Type 1xA165-L_JIS and 1xMET 48MB has been added. Revised Flange Dimensions Drawing has been updated.
2020-08-27	DAAD049590 DAAD121695 DAAD118614	Revised Pipe Connection Plans for Turbocharger Types 1xA165L ISO, 1xA165-L_JIS and 1xMET 48MB have been updated.
2021-03-16	DAAD049590 DAAD121695 DAAD118614 DAAD045822	Revised Pipe Connection Plan for Turbocharger Type 1xA165-L_ISO, 1xA165-L_JIS and 1xMET 48MB has been updated. Revised Flange Dimensions Drawing has been updated.
2021-05-19	PAAD159397 PAAD339851 PAAD333054	Revised Pipe Connection Plan for Turbocharger Type 1xA165-L_ISO, 1xA165-L_JIS and 1xMET 48MB has been updated.

DISCLAIMER

© Copyright by Winterthur Gas & Diesel Ltd.
All rights reserved. No part of this document may be reproduced or copied in any form or by any means (electronic, mechanical, graphic, photocopying, recording, taping or other information retrieval systems) without the prior written permission of the copyright owner.

THIS PUBLICATION IS DESIGNED TO PROVIDE AN ACCURATE AND AUTHORITATIVE INFORMATION WITH REGARD TO THE SUBJECT-MATTER COVERED AS WAS AVAILABLE AT THE TIME OF PRINTING. HOWEVER, THE PUBLICATION DEALS WITH COMPLICATED TECHNICAL MATTERS SUITED ONLY FOR SPECIALISTS IN THE AREA, AND THE DESIGN OF THE SUBJECT-PRODUCTS IS SUBJECT TO REGULAR IMPROVEMENTS, MODIFICATIONS AND CHANGES. CONSEQUENTLY, THE PUBLISHER AND COPYRIGHT OWNER OF THIS PUBLICATION CAN NOT ACCEPT ANY RESPONSIBILITY OR LIABILITY FOR ANY EVENTUAL ERRORS OR OMISSIONS IN THIS BOOKLET OR FOR DISCREPANCIES ARISING FROM THE FEATURES OF ANY ACTUAL ITEM IN THE RESPECTIVE PRODUCT BEING DIFFERENT FROM THOSE SHOWN IN THIS PUBLICATION. THE PUBLISHER AND COPYRIGHT OWNER SHALL UNDER NO CIRCUMSTANCES BE HELD LIABLE FOR ANY FINANCIAL CONSEQUENTIAL DAMAGES OR OTHER LOSS, OR ANY OTHER DAMAGE OR INJURY, SUFFERED BY ANY PARTY MAKING USE OF THIS PUBLICATION OR THE INFORMATION CONTAINED HEREIN.