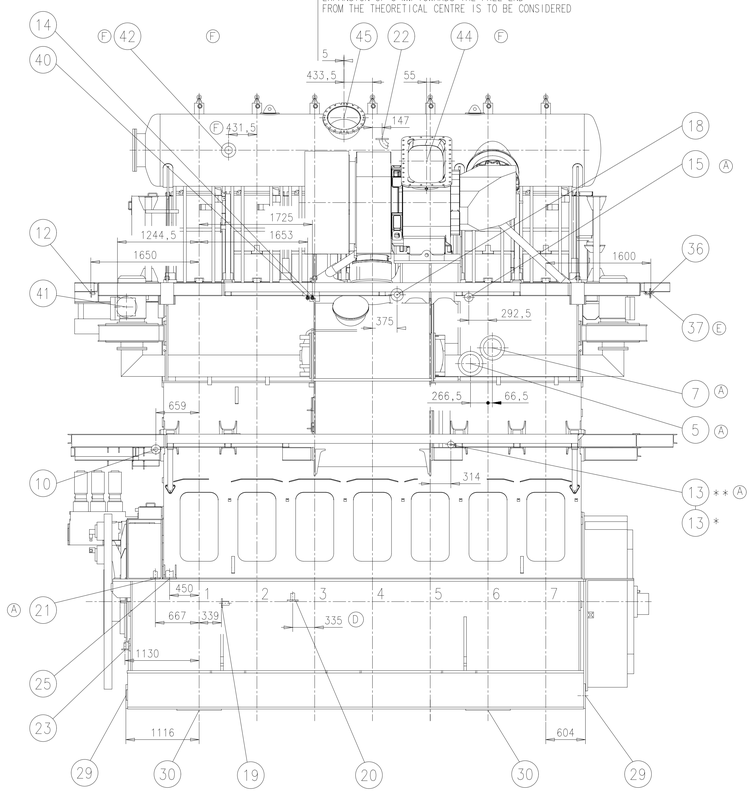
Download "DXF file"

Abgasseite
EXHAUST SIDE

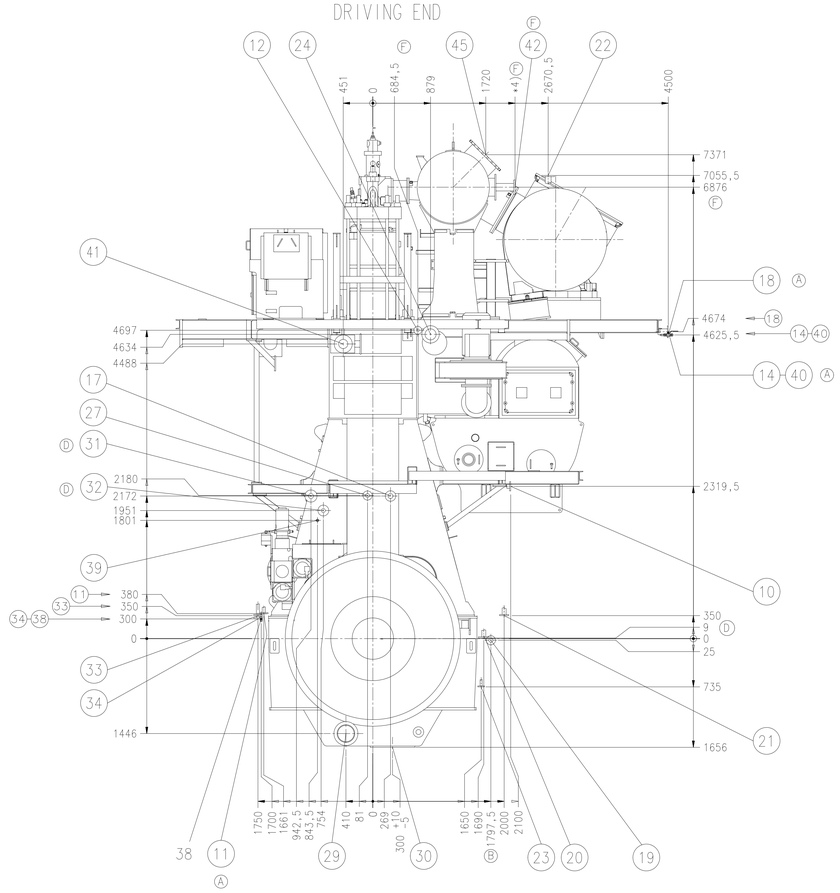
Beim Montieren der Leitung ist die Waermeausdehnung von 5 mm gegen Freies Ende von der theor. Mitte aus zu beruecksichtigen
WHEN ASSEMBLING THE PIPING THE THERMAL EXPANSION OF 5 MM TOWARDS THE FREE END FROM THE THEORETICAL CENTRE IS TO BE CONSIDERED



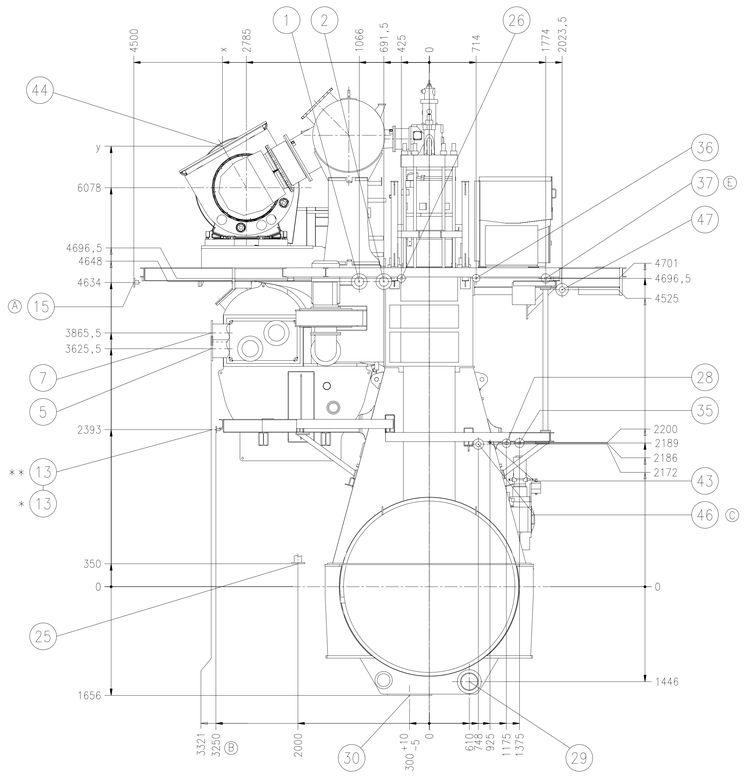
Antriebseite
DRIVING END

Freies Ende
FREE END

Antriebseite
DRIVING END



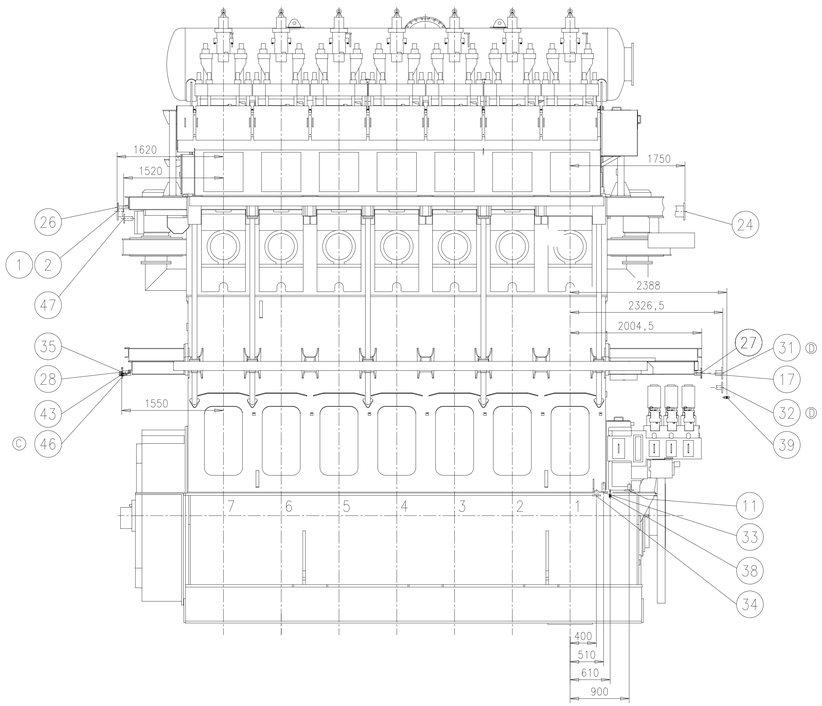
Freies Ende
FREE END



Abgasseite
EXHAUST SIDE

Brennstoffseite
FUEL SIDE

Brennstoffseite
FUEL SIDE



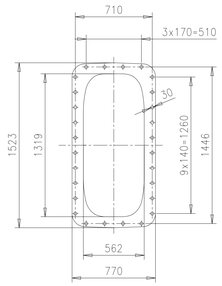
Alle Flanschanschluesse am Motor sind mit Gegenflanschen versehen (Blindflansch), ausgenommen der Anschluss fuer den Gasaustritt am Turbolader. Die Blindflansche sind nach dem betreffenden Rohrdurchmesser des Werftanschlusses aufzubohren.
THE PIPE CONNECTIONS ON THE ENGINE ARE SUPPLIED WITH MATING FLANGES BLIND, WITH EXCEPTION OF THE TURBOCHARGER EXHAUST GAS OUTLET, BLIND FLANGES TO BE DRILLED TO MATCH PIPE DIA SUPPLIED BY THE SHIPYARD.

Die Gewinde-Anschluesse werden komplett geliefert
SCREWED CONNECTIONS ARE SUPPLIED COMPLETE

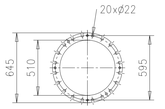
1x A175

Gasaustritt-Stellung GAS OUTLET POSITION	x	y
15°	2974	6783
30°	3150	6710
45°	3301	6594
60°	3417	6443

(44) 1:20



(45) 1:20



** Standard-Ausfuehrung
STANDARD EXECUTION

* Optionelle Ausfuehrung (wenn verlangt)
OPTIONAL EXECUTION (IF REQUIRED)

(F) *4) SEE *DAAD116127

Partweight	Quantity PER ENGINE	SEQ NO	Material ID	Material Name / Dimension, Occ	Standard or Drawing	Basic Material / Material Standard	Weight GR./NET
0,001							
1	002	107.396.290.500		PIPE CONNECTION PLAN	107.396.290		0,001
1	001	107.396.289.500		PIPE CONNECTION PLAN	107.396.289		0,001

Main Drw. H
Q-Code XXXXX
Standard ISO

Mod	Number	Drawn date	Number	Drawn date	Number	Drawn date	Number	Drawn date
C	7-68.512	18.03.2009	D 7-70.124	10.11.2009	E 7-78.359	01.02.2010	F EAAD094899	24.02.2021

Material ID 107.396.286.200 Prev. issue for ref.

Product 7RT-flex50-D

WIN GD Winterthur Gas & Diesel

PIPE CONNECTION PLAN
Rohranschlussplan

Units mm kg | NX | Basic Material | Net Weight

Made 18.02.2008 sga006 Gasser | Scale 1:33 | Size A0 | Page 1/1 | Material ID

Chkd | Design Group 8020 | Drawing ID 107.396.286 | Rev. F

Appd 19.02.2008 SGA006 Gasser

SURFACE PROTECTION SEE GROUP 0344
TOLERANCING PRINCIPLE ISO8015

Copyright Winterthur Gas & Diesel Ltd. All rights reserved. By having possession of the drawing the recipient recognizes and honours these rights. Neither the whole nor any part of this drawing may be used in any way for construction, fabrication, marketing or any other purpose nor copied in any way nor made accessible to third parties without the previous written consent of Winterthur Gas & Diesel Ltd.

ACCEPTED DRAWING - WARNING

Download "DXF file"

				Ko.Gr. KO.GR.	Leitungs-Anschluesse PIPE-CONNECTIONS: Freies Ende FREE END	Antriebseite DRIVING END	Abgasseite EXHAUST SIDE	Brennstoffseite FUEL SIDE
1	8x ø 18, 240, 200	Kuehlwasserleitung Zylindereinsatz Eintritt COOLING WATER PIPE CYLINDER LINER INLET	DN 125 PN 6	8305	X			
2	8x ø 18, 240, 200	Zylinderkuehlwasserleitung Austritt CYLINDER COOLING WATER PIPE OUTLET	DN 125 PN 6	8310	X			
3								
4								
(E) 5 **	12x ø 18, 375, 335	SLK Leitung Kuehlwasser Eintritt SAC PIPE COOLING WATER INLET	DN 250 PN 6	8335			X	
6								
(E) 7 **	12x ø 18, 375, 335	SLK Leitung Kuehlwasser Austritt SAC PIPE COOLING WATER OUTLET	DN 250 PN 6	8335			X	
8								
9								
10	4x ø 14, 140, 110	Sammelleitung Kondenswasser SLK Entlueftung Austritt COLLEC. MAIN CONDENSATE WATER SAC Venting OUTLET	DN 50 PN 6	8357			X	
11	4x ø 14, 130, 100	Oelablaufleitung Versorgungseinheit Austritt OIL PIPE DRAIN SUPPLY UNIT OUTLET	DN 40 PN 6	8454				X
12	4x ø 14, 120, 90	Kuehlwasser Entleerungsleitung COOLING WATER DRAIN PIPE	DN 32 PN 6	8313		X		
(E) 13 * **	4x ø 11, 100, 75	Entlueftung/Entleerung SLK VENTING/DRAIN SAC	DN 25 PN 6	8314			X	
14	ø25x2	Wasser-/Luftltg. Reinigungsanlage (Wasseranschluss) WATER/AIR PIPE CLEANING PLANT (WATER CONNECTION)	DN 20 PN 16	8338			X	
15	4x ø 14, 130, 100	Waschanlage TL Schmutzwasser Austritt WASHING PLANT TC DIRTY WATER OUTLET	DN 40 PN 6	8354			X	
(E) 16	4x ø 18, 140, 100	Zylinderkuehlwasserleitung Entlueftung CYLINDER COOLING WATER PIPE VENTING	DN PN	Nicht benoetigt NOT USED				
17	4x ø 14, 160, 130	Leckoelleitung Auslassventil DE OIL LEAKAGE PIPE EXAUST VALVE DE	DN 65 PN 6	8480		X		
18	4x ø 18, 190, 150	Oelleitung Turbolader Austritt OIL PIPE TURBOCHARGER OUTLET	DN 80 PN 6	8431			X	
19	4x ø 14, 140, 110	Sammelleitung Kondenswasser SLK Kondenswasser Austritt COLLEC. MAIN CONDENSATE WATER SAC CONDENSATE WATER OUTLET	DN 50 PN 6	8357			X	
20	4x ø 18, 165, 125	Sammelleitung Kondenswasser SLK Waschwasser Austritt COLLEC. MAIN CONDENSATE WATER SAC WASHING WATER OUTLET	DN 50 PN 16	8357			X	
21	4x ø 14, 140, 110	Sammelltg. Oelwasser Wasserabsch. COLLECTOR MAIN OILWATER WATER SEP.	DN 50 PN 6	8352			X	
22	4x ø 18, 190, 150	Oelsystem TL Entlueftung OIL SYSTEM TC VENTING	DN 80 PN 6	8610			X	
23	4x ø 11, 100, 75	Sammelleitung Leckoel Grundplatte COLLECTOR MAIN LEAKAGE OIL BEDPLATE	DN 25 PN 6	8463		X		
24	8x ø 18, 265, 225	Oelleitung Eintritt OIL PIPE INLET	DN 150 PN 6	8406		X		
25	4x ø 18, 210, 170	Sammelltg. Schmutzoel Kolbenu.seite COLLECTOR MAIN DIRTY OIL PIST.U.SIDE	DN 100 PN 6	8487			X	
(B) 26	4x ø 14, 120, 90	Zylinderschmieroelleitung Eintritt CYL. LUBRICATING OIL PIPE INLET	DN 32 PN 6	CLU3 7206 Pulse 8475	X			
27	4x ø 14, 140, 110	Sammelleitung Automatikfilter Austritt FLUSHING OIL PIPE AUTOMATIC FILTER OUTLET	DN 50 PN 6	8445		X		
28	4x ø 14, 130, 100	Sammelleitung Leckoel Stopfbuechse COLL. MAIN LEAKAGE OIL GLAND BOX	DN 40 PN 6	8488	X			
29								
(E) 30 **	24x M20, 780, 670	Grundplatte Oelablauf (Vertikal) BEDPLATE OIL DRAIN (VERTICAL)	DN PN	1110	X	X		
31	4x ø 18, 185, 145	Brennstoff Eintritt FUEL OIL INLET	DN 65 PN 16	8702		X		
32	4x ø 18, 165, 125	Brennstoff Austritt FUEL OIL OUTLET	DN 50 PN 16	8704		X		
33	4x ø 14, 130, 100	Leckbrennstoffleitung RAIL-UNIT FUEL LEAKAGE PIPE RAIL-UNIT	DN 40 PN 6	8740				X
34	4x ø 14, 130, 100	Leckbrennstoffltg. Einspritzventil FUEL LEAKAGE PIPE INJECTION VALVE	DN 40 PN 6	8741				X
35	4x ø 18, 140, 100	Feuerloeschleitung FIRE EXTINGUISHING PIPE	DN 32 PN 16	8830	X			
36	4x ø 14, 115, 85	Heizltg. Brennstoff Eintr/Austr Eintritt HEATING PIPE FUEL INLET/OUTLET INLET	DN 25 PN 16	8810	X			
(D) 37 *								
38	ø20x2	Heizltg. Brennstoff Eintr/Austr Austritt HEATING PIPE FUEL INLET/OUTLET OUTLET	DN 15 PN 16	8810				X
39	ø20x2	Heizltg. Brennstoff Eintr/Austr Austritt HEATING PIPE FUEL INLET/OUTLET OUTLET	DN 15 PN 16	8810		X		
(A) 40	ø25x2	Wasser-/Luftltg. Reinigungsanlage (Luftanschluss) WATER/AIR PIPE CLEANING PLANT (AIR CONNECTION)	DN 20 PN 16	8338			X	
41	8x ø 26, 270, 220	Anlassluftleitung Eintritt STARTING AIR PIPE PIPE INLET	DN 125 PN 40	8605		X		
(E) 42 *		Ablassventil fuer "WASTE GATE" EXHAUST WASTE GATE	DN PN	8135	IF USED, SEE DAAD116127			
43	ø20x2	Steuerluftversorgung 6.5 bar: A1 CONTROL AIR SUPPLY	DN 15 PN 8	8630				X
44	siehe Zchng 1 SEE DRAWING 1	Turbolader Gasaustritt TURBOCHARGER GAS OUTLET		6506 6509			X	
45	siehe Zchng 1 SEE DRAWING 1	Bypass zur Auspuffleitung (fuer Motoren mit einem Tutbolader) EXHAUST BY-PASS (FOR ENGINES WITH ONE TURBOCHARGER)		8103 8108		X		
(A) (C) 46	4x ø 14, 160, 130	Entlueftungsltg. Kurbelgehaeuse VENTING PIPE CRANKCASE	DN 65 PN 6	8608	X			
47	4x ø 14, 140, 110	Oel Zu/Ablaufleitung Servosystem Austritt OIL INLET/DRAIN PIPE SERVO SYSTEM OUTLET	DN 50 PN 6	8448	X			

(E) * Optionelle Ausfuehrung (wenn verlangt)
OPTIONAL EXECUTION (IF REQUIRED)

** Standard-Ausfuehrung
STANDARD EXECUTION

gezeichnet fuer Turbolader
DRAWN FOR TURBOCHARGER
1x A175

SURFACE PROTECTION SEE GROUP 0344
TOLERANCING PRINCIPLE ISO8015

Free space for lic.

Q-Code XXXXX
Standard ISO
Main Drw.

Modif.	Number	Drawn date
(B)	7-65.109	22.07.2008
(C)	7-68.512	18.03.2009
(D)	7-78.359	01.02.2010
(E)	EAAD094899	24.02.2021

WIN GD Winterthur Gas & Diesel

Product 5-7RT-flex50-D

PIPE CONNECTION PLAN
Rohranschlussplan

Units mm kg	NX	Basic Material	Net Weight 0.001
Made 12.02.2008 sga006 Gasser	Chkd	Scale 1:1	Size A1 / Page 1/1 / Material ID 107.396.289.500
Appd 19.02.2008 SGA006 Gasser		Design Group 8020	Drawing ID 107.396.289 / Rev. E

DID - DIMENSIONAL DRAWING - Confidential

Approved

Copyright Winterthur Gas & Diesel Ltd. All rights reserved. By taking possession of the drawing the recipient recognizes and honours these rights. Neither the whole nor any part of this drawing may be used in any way for construction, fabrication, marketing or any other purpose nor copied in any way nor made accessible to third parties without the previous written consent of Winterthur Gas & Diesel Ltd.

Download "DXF file"

					Ko.Gr. KO.GR.	Leitungs-Anschluesse PIPE-CONNECTIONS			
						Freies Ende FREE END	Antriebseite DRIVING END	Abgasseite EXHAUST SIDE	Brennstoffseite FUEL SIDE
1									
2									
3									
4									
(B) 5	**	12x ø 18, 375, 335	SLK Leitung Kuehlwasser Eintritt SAC PIPE COOLING WATER INLET	DN 250 PN 6	8335			X	
6									
(B) 7	**	12x ø 18, 375, 335	SLK Leitung Kuehlwasser Austritt SAC PIPE COOLING WATER OUTLET	DN 250 PN 6	8335			X	
8									
9									
10									
11									
12									
(B) 13	* **	4x ø 11, 100, 75	Entlueftung/Entleerung SLK VENTING/DRAIN SAC	DN 25 PN 6	8314			X	
14									
15									
(B) 16		4x ø 18, 140, 100	Zylinderkuehlwasserleitung Entlueftung CYLINDER COOLING WATER PIPE VENTING	DN PN		Nicht benoetigt NOT USED			
17									
18									
19									
20									
21									
22									
23									
24									
25									

					Ko.Gr. KO.GR.	Leitungs-Anschluesse PIPE-CONNECTIONS			
						Freies Ende FREE END	Antriebseite DRIVING END	Abgasseite EXHAUST SIDE	Brennstoffseite FUEL SIDE
26									
27									
28									
(B) 29	*	12x M20, 365, 330	Grundplatte Oelablauf (Horizontal) BEDPLATE OIL DRAIN (HORIZONTAL)	DN PN	1110	X	X		
30									
31									
32									
33									
34									
35									
36									
(A) (B) 37	*	4x ø 18, 140, 100	Feuerloeschleitung RU Eintritt FIRE EXTINGUISHING PIPE RU INLET	DN 32 PN 16	8832	X			
38									
39									
40									
41									
42									
43									
44									
45									
46									
47									

(B) * Optionelle Ausfuehrung (wenn verlangt)
OPTIONAL EXECUTION (IF REQUIRED)

(B)
** Standard-Ausfuehrung
STANDARD EXECUTION

gezeichnet fuer Turbolader
DRAWN FOR TURBOCHARGER
1x A175

Free space for lic.				Q-Code XXXXX Standard ISO	Main Drw.
Modif.	(A) 7-78.359	01.02.2010	(B) EAAD094899	24.02.2021	
	Number	Drawn date	Number	Drawn date	Number / Drawn date / Number / Drawn date

WIN GD Winterthur Gas & Diesel

Product: 6-8RT-flex50-D

PIPE CONNECTION PLAN

Rohranschlussplan

Units mm kg	NX	Basic Material			Net Weight 0,001
Made 12.02.2008 sga006 Gasser	Scale 1:1	Size A1	Page 1/1	Material ID 107.396.290.500	
Chkd	Design Group 8020	Drawing ID 107.396.290		Rev. B	
Appd 19.02.2008 SGA006 Gasser					

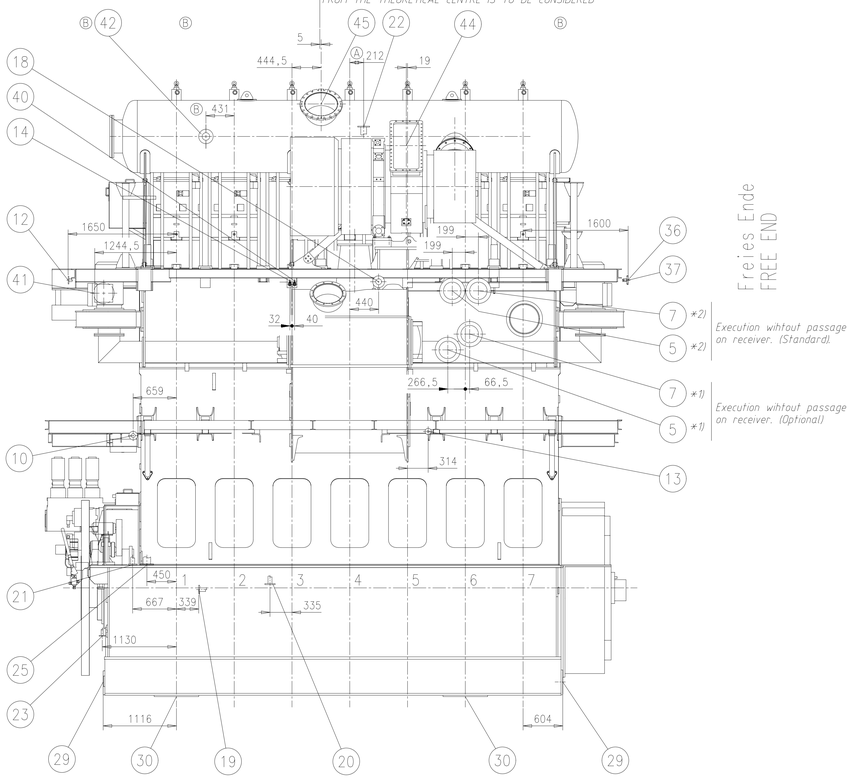
SURFACE PROTECTION SEE GROUP 0344
TOLERANCING PRINCIPLE ISO8015

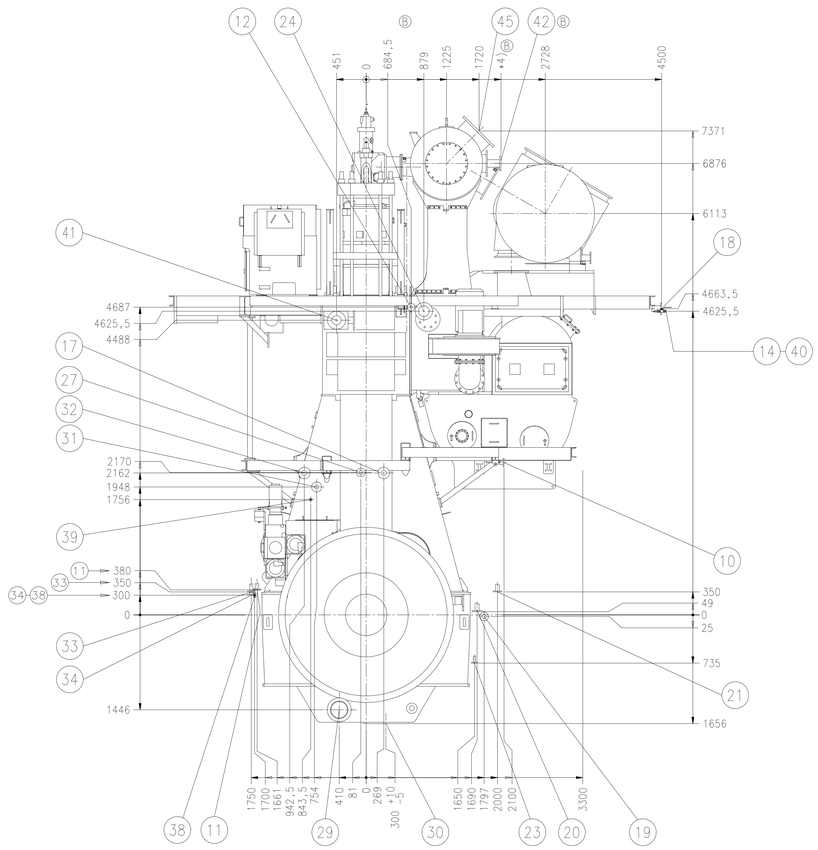
Approved

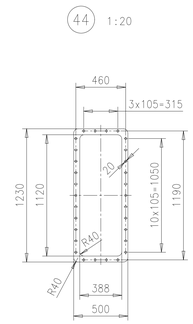
DID - DIMENSIONAL DRAWING - Confidential

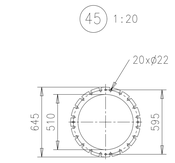
Copyright Winterthur Gas & Diesel Ltd. All rights reserved. By taking possession of the drawing the recipient recognizes and honours these rights. Neither the whole nor any part of this drawing may be used in any way for construction, fabrication, marketing or any other purpose nor copied in any way nor made accessible to third parties without the previous written consent of Winterthur Gas & Diesel Ltd.

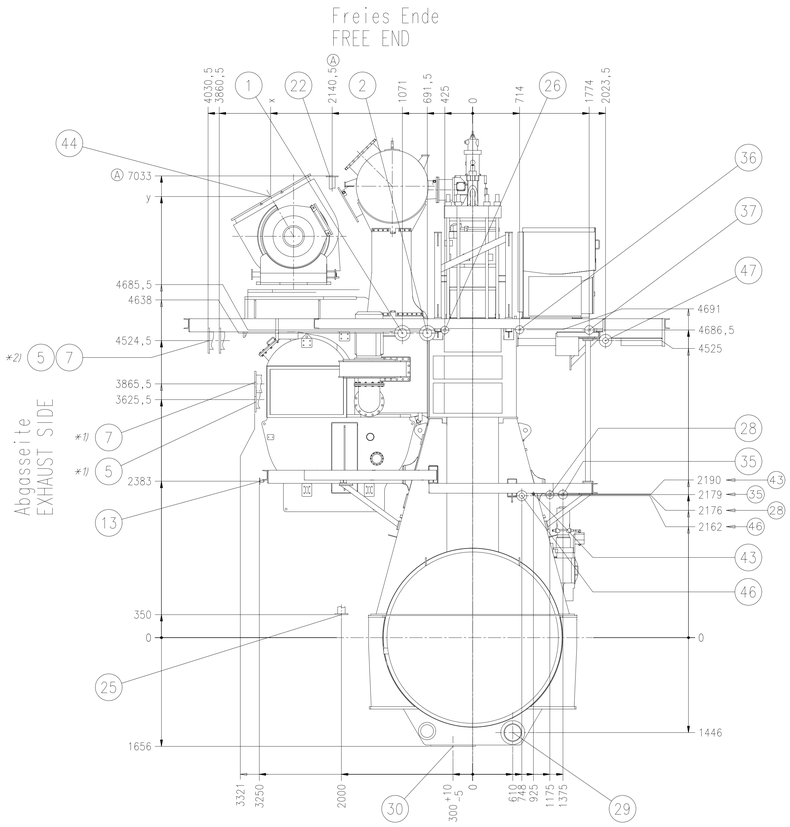
Download "DXF file"

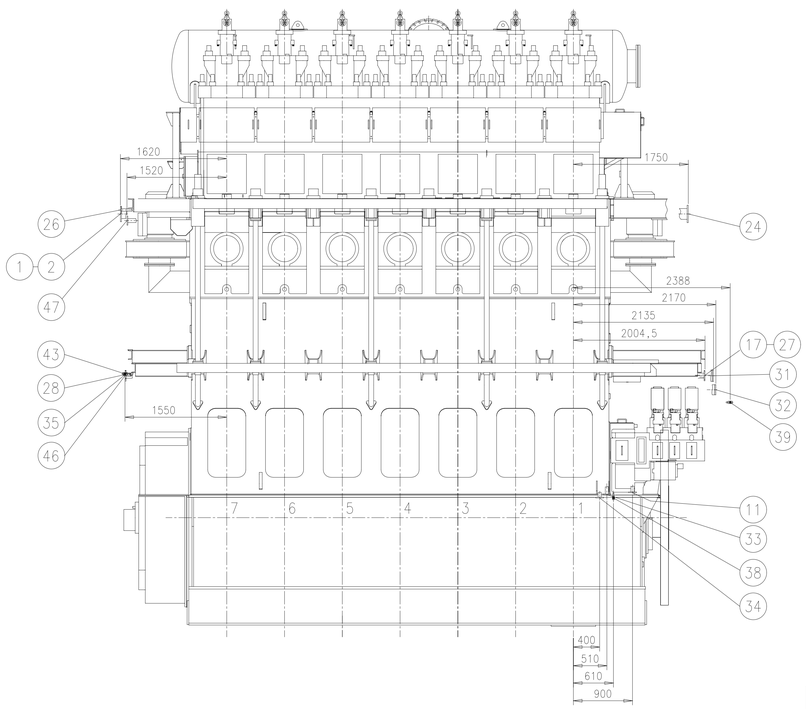












Gasaustritt-Stellung GAS OUTLET POSITION	x	y
15°	2909	6789
30°	3078	6719
45°	3223	6608

Alle Flanschanschluesse am Motor sind mit Gegenflanschen versehen (Blindflansch), ausgenommen der Anschluss fuer den Gasaustritt am Turbolader. Die Blindflansche sind nach dem betreffenden Rohrdurchmesser des Werftanschlusses aufzubohren.
THE PIPE CONNECTIONS ON THE ENGINE ARE SUPPLIED WITH MATING FLANGES (BLIND), WITH EXCEPTION OF THE TURBOCHARGER EXHAUST GAS OUTLET. BLIND FLANGES TO BE DRILLED TO MATCH PIPE DIA SUPPLIED BY THE SHIPYARD.

**2) Standard Ausfuehrung*
STANDARD EXECUTION

**1) Optionale Ausfuehrung (wenn verlangt)*
OPTIONAL EXECUTION (IF REQUIRED)

Ⓑ *4) SEE *DAAD116127

Partweight										
0,001										
1	001	107.390.729.500	FLANGE DIMENSIONS		107.390.729					0,001
Quantity PER ENGINE	SEQ NO	Material ID	Material Name Dimension, Occ		Standard or Drawing		Basic Material Material Standard			Weight GR.NET
PAAD089216	Free Issue Nr.								G-Code XXXXX	Main Dr. H
Material	Sheet	A EAAD083841	25.05.2012	A EAAD091635	17.01.2020	B EAAD094899	24.02.2021		Standard MS	
		Number	Drawn date	Number	Drawn date	Number	Drawn date	Number	Drawn date	

WIN GD Winterthur Gas & Diesel

Product 7RT-flex50-D

PIPE CONNECTION PLAN

Rohranschlussplan

Units	mm kg	NX	Basic Material	Net Weight
Mode	22.05.2012 mve023 Vetsch		Scale 1:33	Size A0 Page 1/2 Material ID
Chkd	23.05.2012 ihe003 Herceg		Design Group 8020	Drawing ID DAAD028273 Rev. B
Appd	24.05.2012 bha009 Haag			

SURFACE PROTECTION SEE GROUP 0344
TOLERANCING PRINCIPLE ISO8015
GENERAL TOLERANCES ACCORDING TO ISO2768-mK

Copyright Winterthur Gas & Diesel Ltd. All rights reserved. By having possession of the drawing the recipient recognizes and honours these rights. Neither the whole nor any part of this drawing may be used in any way for construction, fabrication, marketing or any other purpose nor copied in any way nor made accessible to third parties without the previous written consent of Winterthur Gas & Diesel Ltd.

REVOLUTION TECHNOLOGY - PERFORMANCE

				Ko.Gr. KO.GR.	Leitungs-Anschluesse PIPE-CONNECTIONS: Freies Ende FREE END	Antriebseite DRIVING END	Abgasseite EXHAUST SIDE	Brennstoffseite FUEL SIDE
1		Kuehlwasserleitung Zylindereinsatz Eintritt COOLING WATER PIPE CYLINDER LINER INLET	DN 125 PN 5	8305	X			
2		Zylinderkuehlwasserleitung Austritt CYLINDER COOLING WATER PIPE OUTLET	DN 125 PN 5	8310	X			
3								
4								
Ⓑ 5 *1) *2)		SLK Leitung Kuehlwasser Eintritt SAC PIPE COOLING WATER INLET	DN 250 PN 5	8335			X	
6								
Ⓑ 7 *1) *2)		SLK Leitung Kuehlwasser Austritt SAC PIPE COOLING WATER OUTLET	DN 250 PN 5	8335			X	
8								
9								
10		Sammelleitung Kondenswasser SLK Entlueftung Austritt COLLEC. MAIN CONDENSATE WATER SAC VENTING OUTLET	DN 50 PN 5	8357			X	
11		Oelablaufleitung Versorgungseinheit OIL PIPE DRAIN SUPPLY UNIT	DN 40 PN 5	8454				X
12		Kuehlwasser Entleerungsleitung COOLING WATER DRAIN PIPE	DN 32 PN 5	8313		X		
13		Entlueftung/Entleerung SLK VENTING/DRAIN SAC	DN 25 PN 5	8314			X	
14	ø25x2	Wasser-/Luftltg. Reinigungsanlage (Wasseranschluss) WATER/AIR PIPE CLEANING PLANT (WATER CONNECTION)	DN 20 PN 16	8338			X	
15								
Ⓑ 16		Zylinderkuehlwasserleitung Entlueftung CYLINDER COOLING WATER PIPE VENTING	DN PN	Nicht benoetigt NOT USED				
17		Leckoelleitung Auslassventil DE LEAKAGE OIL PIPE EXHAUST VALVE DE	DN 65 PN 5	8480		X		
18		Oelleitung Turbolader Austritt OIL PIPE TURBOCHARGER OUTLET	DN 80 PN 5	8431			X	
19		Sammelleitung Kondenswasser SLK Kondenswasser Austritt COLLEC. MAIN CONDENSATE WATER SAC CONDENSATE WATER OUTLET	DN 50 PN 5	8357			X	
20		Sammelleitung Kondenswasser SLK Waschwasser Austritt COLLEC. MAIN CONDENSATE WATER SAC WASHING WATER OUTLET	DN 50 PN 10	8357			X	
21		Sammelltg. Oelwasser Wasserabsch. COLLECTOR MAIN OILWATER WATER SEP.	DN 50 PN 5	8352			X	
22		Oelsystem TL Entlueftung OIL SYSTEM TC VENTING	DN 80 PN 5	8610			X	
23		Sammelleitung Leckoel Grundplatte COLLECTOR MAIN LEAKAGE OIL BEDPLATE	DN 25 PN 5	8463		X		
24		Oelleitung Eintritt OIL PIPE INLET	DN 150 PN 5	8406		X		
25		Sammelltg. Schmutzoel Kolbenu.seite COLLECTOR MAIN DIRTY OIL PIST.U.SIDE	DN 100 PN 5	8487			X	
26		Zylinderschmieroelleitung Eintritt CYL. LUBRICATING OIL PIPE INLET	DN 32 PN 5	CLU3 7206 Pulse 8475	X			
27		Sammelleitung Automatikfilter Automatikfilter FLUSHING OIL PIPE AUTOMATIC FILTER OUTLET	DN 50 PN 5	8445		X		
28		Sammelleitung Leckoel Stopfbuechse COLL. MAIN LEAKAGE OIL GLAND BOX	DN 40 PN 5	8488	X			
Ⓑ 29 *1)		Grundplatte Oelablauf (Horizontal) BEDPLATE OIL DRAIN (HORIZONTAL)	DN PN	1110	X	X		
Ⓑ 30 *2)		Grundplatte Oelablauf (Vertikal) BEDPLATE OIL DRAIN (VERTICAL)	DN PN	1110	X	X		
31		Brennstoff Eintritt FUEL OIL INLET	DN 65 PN 16	8702		X		
32		Brennstoff Austritt FUEL OIL OUTLET	DN 50 PN 16	8704		X		
33		Leckbrennstoffleitung RAIL-UNIT FUEL LEAKAGE PIPE RAIL-UNIT	DN 40 PN 5	8740				X
34		Leckbrennstoffltg. Einspritzventil FUEL LEAKAGE PIPE INJECTION VALVE	DN 40 PN 5	8741				X
35		Feuerloeschleitung FIRE EXTINGUISHING PIPE	DN 32 PN 16	8830	X			
36		Heizltg. Brennstoff Eintr/Austr Eintritt HEATING PIPE FUEL INLET/OUTLET INLET	DN 25 PN 16	8810	X			
Ⓑ 37 *1)		Feuerloeschleitung RU Eintritt FIRE EXTINGUISHING PIPE RU INLET	DN 32 PN 16	8832	X			
38	ø20x2	Heizltg. Brennstoff Eintr/Austr Austritt HEATING PIPE FUEL INLET/OUTLET OUTLET	DN 15 PN 16	8810				X
39	ø20x2	Heizltg. Brennstoff Eintr/Austr Austritt HEATING PIPE FUEL INLET/OUTLET OUTLET	DN 15 PN 16	8810		X		
40	ø25x2	Wasser-/Luftltg. Reinigungsanlage (Luftanschluss) WATER/AIR PIPE CLEANING PLANT (AIR CONNECTION)	DN 20 PN 16	8338			X	
41		Anlassluftleitung Eintritt STARTING AIR PIPE PIPE INLET	DN 125 PN 30	8605		X		
Ⓑ 42 *1)		Ablassventil fuer "WASTE GATE" EXHAUST WASTE GATE	DN PN	8135	IF USED, SEE DAAD116127			
43	ø20x2	Steuerluftversorgung 6.5 bar: A1 CONTROL AIR SUPPLY	DN 15 PN 8	8630				X
44	siehe Zchng 1 SEE DRAWING 1	Turbolader Gasaustritt TURBOCHARGER GAS OUTLET		6506 6509			X	
45	siehe Zchng 1 SEE DRAWING 1	Bypass zur Auspuffleitung (fuer Motoren mit einem Turbolader) EXHAUST BY-PASS (FOR ENGINES WITH ONE TURBOCHARGER)		8103 8108				
46		Entlueftungsltg. Kurbelgehaeuse VENTING PIPE CRANKCASE	DN 65 PN 5	8608	X			
47		Oel Zu/Ablaufleitung Servosystem Austritt OIL INLET/DRAIN PIPE SERVO SYSTEM OUTLET	DN 50 PN 5	8448	X			

*2) *Standard Ausfuehrung*
STANDARD EXECUTION

*1) *Optionale Ausfuehrung (wenn verlangt)*
OPTIONAL EXECUTION (IF REQUIRED)

Free space for lic.

Q-Code XXXXX

Standard JIS

Main Drw. H

Modif.	Number	Drawn date
-	EAAD083841	25.05.2012
A	EAAD091635	17.01.2020
B	EAAD094899	24.02.2021

WIN GD Winterthur Gas & Diesel

Product 7RT-flex50-D

PIPE CONNECTION PLAN

Rohranschlussplan

Units mm kg | NX | Basic Material | Net Weight

SURFACE PROTECTION SEE GROUP 0344	Made	22.05.2012 mve023 Vetsch	Scale 1:1	Size A1	Page 2/2
TOLERANCING PRINCIPLE ISO8015	Chkd	23.05.2012 ihe003 Herceg	Design Group 8020	Material ID	
GENERAL TOLERANCES ACCORDING TO ISO2768-mK	Appd	24.05.2012 bha009 Haag	Drawing ID DAAD028273	Rev. B	

Approved

LD - INSTALLATION DRAWING - Internal

Copyright Winterthur Gas & Diesel Ltd. All rights reserved. By taking possession of the drawing the recipient recognizes and honours these rights. Neither the whole nor any part of this drawing may be used in any way for construction, fabrication, marketing or any other purpose nor copied in any way nor made accessible to third parties without the previous written consent of Winterthur Gas & Diesel Ltd

ISO

PN	DN	OUT.DIA.	THICK	DIM. FOR SCREWS			
6 bar	25	100	14	75	4	M10	11
	32	120	16	90	4	M12	14
	40	130	16	100	4	M12	14
	50	140	16	110	4	M12	14
	65	160	16	130	4	M12	14
	80	190	18	150	4	M16	18
	100	210	18	170	4	M16	18
	125	240	20	200	8	M16	18
	150	265	20	225	8	M16	18
	200	320	22	280	8	M16	18
	250	375	24	335	12	M16	18
	300	440	24	395	12	M20	22
	350	490	26	445	12	M20	22
	400	540	28	495	16	M20	22
	450	595	30	550	16	M20	22
	500	645	30	600	20	M20	22

PN	DN	OUT.DIA.	THICK	DIM. FOR SCREWS			
16 bar	25	115	16	85	4	M12	14
	32	140	18	100	4	M16	18
	40	150	18	110	4	M16	18
	50	165	19	125	4	M16	18
	65	185	20	145	8	M16	18
	80	200	20	160	8	M16	18
	100	220	22	180	8	M16	18
	125	250	22	210	8	M16	18
	150	285	24	240	8	M20	22
	200	340	26	295	12	M20	22
	250	405	32	355	12	M24	26
	300	460	32	410	12	M24	26
	350	520	35	470	16	M24	26
	400	580	38	525	16	M27	30
	450	640	42	585	20	M27	30
	500	715	46	650	20	M30	33

PN	DN	OUT.DIA.	THICK	DIM. FOR SCREWS			
10 bar	25	115	16	85	4	M12	14
	32	140	18	100	4	M16	18
	40	150	18	110	4	M16	18
	50	165	19	125	4	M16	18
	65	185	20	145	8	M16	18
	80	200	20	160	8	M16	18
	100	220	22	180	8	M16	18
	125	250	22	210	8	M16	18
	150	285	24	240	8	M20	22
	200	340	24	295	8	M20	22
	250	395	26	350	12	M20	22
	300	445	26	400	12	M20	22
	350	505	28	460	16	M20	22
	400	565	32	515	16	M24	26
	450	615	38	565	20	M24	26
	500	670	38	620	20	M24	26

PN	DN	OUT.DIA.	THICK	DIM. FOR SCREWS			
40 bar	25	115	16	85	4	M12	14
	32	140	18	100	4	M16	18
	40	150	18	110	4	M16	18
	50	165	20	125	4	M16	18
	65	185	22	145	8	M16	18
	80	200	24	160	8	M16	18
	100	235	26	190	8	M20	22
	125	270	28	220	8	M24	26
	150	300	30	250	8	M24	26
	200	375	36	320	12	M27	30
	250	450	44	385	12	M30	33
	300	515	48	450	16	M30	33
	350	580	54	510	16	M33	36
	400	660	60	585	16	M36	39

JIS

PN	DN	OUT.DIA.	THICK	DIM. FOR SCREWS			
5 bar	25	95	10	75	4	M10	12
	32	115	12	90	4	M12	15
	40	120	12	95	4	M12	15
	50	130	14	105	4	M12	15
	65	155	14	130	4	M12	15
	80	180	14	145	4	M16	19
	100	200	16	165	8	M16	19
	125	235	16	200	8	M16	19
	150	265	18	230	8	M16	19
	200	320	20	280	8	M20	23
	250	385	22	345	12	M20	23
	300	430	22	390	12	M20	23
	350	480	24	435	12	M22	25
	400	540	24	495	16	M22	25
	450	605	24	555	16	M22	25
	500	655	24	605	20	M22	25

PN	DN	OUT.DIA.	THICK	DIM. FOR SCREWS			
16 bar	25	125	14	90	4	M16	19
	32	135	16	100	4	M16	19
	40	140	16	105	4	M16	19
	50	155	16	120	8	M16	19
	65	175	18	140	8	M16	19
	80	200	20	160	8	M20	23
	100	225	22	185	8	M20	23
	125	270	22	225	8	M22	25
	150	305	24	260	12	M22	25
	200	350	26	305	12	M22	25
	250	430	28	380	12	M24	27
	300	480	30	430	16	M24	27
	350	540	34	480	16	M30	33
	400	605	38	540	16	M30	33
	450	675	40	605	20	M30	33
	500	730	42	660	20	M30	33

PN	DN	OUT.DIA.	THICK	DIM. FOR SCREWS			
10 bar	25	125	14	90	4	M16	19
	32	135	16	100	4	M16	19
	40	140	16	105	4	M16	19
	50	155	16	120	4	M16	19
	65	175	18	140	4	M16	19
	80	185	18	150	8	M16	19
	100	210	18	175	8	M16	19
	125	250	20	210	8	M20	23
	150	280	22	240	8	M20	23
	200	330	22	290	12	M20	23
	250	400	24	355	12	M22	25
	300	445	24	400	16	M22	25
	350	490	26	445	16	M22	25
	400	560	28	510	16	M24	27
	450	620	30	565	20	M24	27
	500	675	30	620	20	M24	27

PN	DN	OUT.DIA.	THICK	DIM. FOR SCREWS			
30 bar	25	130	20	95	4	M16	19
	32	140	22	105	4	M16	19
	40	160	22	120	4	M20	23
	50	165	22	130	8	M16	19
	65	200	26	160	8	M20	23
	80	210	28	170	8	M20	23
	100	240	32	195	8	M22	25
	125	275	36	230	8	M22	25
	150	325	38	275	12	M24	27
	200	370	42	320	12	M24	27
	250	450	48	390	12	M30	33
	300	515	52	450	16	M30	33
	350	560	54	495	16	M30	33
	400	630	60	560	16	M36	39

Substitute for:

PC	Q-Code					
		X	X	X	X	X

Modif												
	A	EAAD084180	04.10.2012									
		Number	Drawn Date		Number	Drawn Date		Number	Drawn Date		Number	Drawn Date

WÄRTSILÄ

Product
W-2S

Flange Dimensions

Made	19.09.2007	N. Brand	Main Drw.	Page 1 / 1	Material ID **107.390.729.500**
Chkd	27.09.2007	M. Frei	Design Group **8020**		
Appd	27.09.2007	B. Haag		Drawing ID **107.390.729**	Rev **A**

Copyright Wärtsilä. All rights reserved. By taking possession of the drawing, the recipient recognizes and honors these rights. Neither the whole nor any part of this drawing may be used in any way for construction, fabrication, marketing or any other purpose nor copied in any way nor made accessible to third parties without the previous written consent of Wärtsilä.

WinGD – 7RT-flex50-D_Pipe Connection Plan

TRACK CHANGES

DATE	SUBJECT	DESCRIPTION
2018-02-26	DRAWING SET	First web upload
2020-08-27	DAAD028273	Revised Pipe Connection Plan for Turbocharger Type 1xMET 60MB has been updated.
2021-05-22	107.396.286.200 PAAD089296	Revised Pipe Connection Plans for Turbocharger Types 1xA175 & 1xMET 60MB have been updated.

DISCLAIMER

© Copyright by Winterthur Gas & Diesel Ltd.
All rights reserved. No part of this document may be reproduced or copied in any form or by any means (electronic, mechanical, graphic, photocopying, recording, taping or other information retrieval systems) without the prior written permission of the copyright owner.

THIS PUBLICATION IS DESIGNED TO PROVIDE AN ACCURATE AND AUTHORITATIVE INFORMATION WITH REGARD TO THE SUBJECT-MATTER COVERED AS WAS AVAILABLE AT THE TIME OF PRINTING. HOWEVER, THE PUBLICATION DEALS WITH COMPLICATED TECHNICAL MATTERS SUITED ONLY FOR SPECIALISTS IN THE AREA, AND THE DESIGN OF THE SUBJECT-PRODUCTS IS SUBJECT TO REGULAR IMPROVEMENTS, MODIFICATIONS AND CHANGES. CONSEQUENTLY, THE PUBLISHER AND COPYRIGHT OWNER OF THIS PUBLICATION CAN NOT ACCEPT ANY RESPONSIBILITY OR LIABILITY FOR ANY EVENTUAL ERRORS OR OMISSIONS IN THIS BOOKLET OR FOR DISCREPANCIES ARISING FROM THE FEATURES OF ANY ACTUAL ITEM IN THE RESPECTIVE PRODUCT BEING DIFFERENT FROM THOSE SHOWN IN THIS PUBLICATION. THE PUBLISHER AND COPYRIGHT OWNER SHALL UNDER NO CIRCUMSTANCES BE HELD LIABLE FOR ANY FINANCIAL CONSEQUENTIAL DAMAGES OR OTHER LOSS, OR ANY OTHER DAMAGE OR INJURY, SUFFERED BY ANY PARTY MAKING USE OF THIS PUBLICATION OR THE INFORMATION CONTAINED HEREIN.