A

Options			Executions			
	Turbocharger lubrication	INTERNAL	X		X	
		EXTERNAL		X		X
	Booster pumps for crosshead lubrication	WITH	X	X		
		WITHOUT			X	X
			Net Weight			
			105	105	105	105

Rating Field A	Engine rated with CMCR speed 102 ≤ rpm ≤ 109	Booster pumps for crosshead lubrication: NEEDED	PAAD251167 PAAD251168
Rating Field C	Engine rated with CMCR speed 109 ≤ rpm ≤ 127	Booster pumps for crosshead lubrication: NOT NEEDED	PAAD251165 PAAD251166
		Booster pumps for crosshead lubrication: OPTIONAL	PAAD251167 PAAD251168

Quantity PER ENGINE				SEQ NO	Material ID	Material Name / Dimension, Occ	Standard or Drawing	Basic Material / Material Standard	Weight GR./NET
1	1	1	1	006	107.341.455.500	INSTRUCTION FOR FLUSHING	107.341.455		0,001
1	1	1	1	005	PAAD039570	LUBRICATING OIL DRAIN TANK	DAAD016269		0,001
1	1	1	1	004	PAAD040057	LUBRICATING OIL DRAIN TANK	DAAD016403		105
-	1	-	1	003	PAAD245338	LUBRICATING OIL SYSTEM external turbocharger LO system	DAAD083642		0,001
1	1	-	-	002	PAAD235846	LUBRICATING OIL SYSTEM with HP pumps	DAAD080720		0,001
-	-	1	1	001	PAAD038792	LUBRICATING OIL SYSTEM without HP pumps	DAAD015999		0,001

A

PAAD251168	PAAD251167	PAAD251166	PAAD251165
Material ID			

Free space for lic.

Q-Code: XXXXX

Standard: ISO; JIS

Main Drw.: H

Modif.	Number	Drawn date	Number	Drawn date	Number	Drawn date	Number	Drawn date
-	EAAD082835	07.04.2011	A EAAD087222	18.01.2017				

WIN GD Winterthur Gas & Diesel

Product: 5RT-flex48T-D

LUBRICATING OIL SYSTEM WITH VERTICAL OIL DRAINS

Schmieroelsystem

Units: mm kg | NX | Basic Material | Net Weight

SURFACE PROTECTION SEE GROUP 0344

TOLERANCING PRINCIPLE ISO8015

GENERAL TOLERANCES ACCORDING TO ISO2768-mK

Made	21.04.2011	mhu019	M.Hug
Chkd	02.05.2011	sfe006	Feuerstein
Appd	03.05.2011	dst009	Strödecke

Scale: -

Design Group: 9722

Size: A3 | Page: 1/1 | Material ID

Drawing ID: DAAD016690 | Rev.: A

Approved

PD - PRODUCTION DRAWING - Confidential

Copyright Winterthur Gas & Diesel Ltd. All rights reserved. By taking possession of the drawing the recipient recognizes and honours these rights. Neither the whole nor any part of this drawing may be used in any way for construction, fabrication, marketing or any other purpose nor copied in any way nor made accessible to third parties without the previous written consent of Winterthur Gas & Diesel Ltd.

Options			Executions			
	Turbocharger lubrication	INTERNAL	X		X	
		EXTERNAL		X		X
	Booster pumps for crosshead lubrication	WITH	X	X		
		WITHOUT			X	X
		Net Weight	105	105	105	105

Rating Field A	Engine rated with CMCR speed 102 ≤ rpm ≤ 109	Booster pumps for crosshead lubrication: NEEDED	PAAD251289 PAAD251290
Rating Field C	Engine rated with CMCR speed 109 ≤ rpm ≤ 127	Booster pumps for crosshead lubrication: NOT NEEDED	PAAD251287 PAAD251288
		Booster pumps for crosshead lubrication: OPTIONAL	PAAD251289 PAAD251290

Quantity PER ENGINE				SEQ NO	Material ID	Material Name / Dimension, Occ	Standard or Drawing	Basic Material / Material Standard	Weight GR./NET
1	1	1	1	006	107.341.455.500	INSTRUCTION FOR FLUSHING	107.341.455		0,001
1	1	1	1	005	PAAD039570	LUBRICATING OIL DRAIN TANK	DAAD016269		0,001
1	1	1	1	004	PAAD040057	LUBRICATING OIL DRAIN TANK	DAAD016403		105
-	1	-	1	003	PAAD245338	LUBRICATING OIL SYSTEM external turbocharger LO system	DAAD083642		0,001
1	1	-	-	002	PAAD235846	LUBRICATING OIL SYSTEM with HP pumps	DAAD080720		0,001
-	-	1	1	001	PAAD038792	LUBRICATING OIL SYSTEM without HP pumps	DAAD015999		0,001

Material ID			
PAAD251290	PAAD251289	PAAD251288	PAAD251287

Free space for lic.

Q-Code: XXXXX

Standard: ISO; JIS

Main Drw.: H

Modif.	Number	Drawn date	Number	Drawn date	Number	Drawn date	Number	Drawn date

WIN GD Winterthur Gas & Diesel

Product: 6RT-flex48T-D

LUBRICATING OIL SYSTEM

Schmieroelsystem

Units mm kg	NX		Basic Material		Net Weight
Made	18.01.2017 dki021 DH.Kim	Scale -	Size A3	Page 1/1	Material ID
Chkd	03.02.2017 wwa008 Wang	Design Group 9722	Drawing ID DAAD086378		Rev. -
Appd	03.02.2017 mhu019 Hug				

SURFACE PROTECTION SEE GROUP 0344

TOLERANCING PRINCIPLE ISO8015

GENERAL TOLERANCES ACCORDING TO ISO2768-mK

Approved

PD - PRODUCTION DRAWING - Confidential

Copyright Winterthur Gas & Diesel Ltd. All rights reserved. By taking possession of the drawing the recipient recognizes and honours these rights. Neither the whole nor any part of this drawing may be used in any way for construction, fabrication, marketing or any other purpose nor copied in any way nor made accessible to third parties without the previous written consent of Winterthur Gas & Diesel Ltd.

Options			Executions			
	Turbocharger lubrication	INTERNAL	X		X	
		EXTERNAL		X		X
	Booster pumps for crosshead lubrication	WITH	X	X		
		WITHOUT			X	X
			Net Weight			
			0,001	0,001	0,001	0,001

Rating Field A	Engine rated with CMCR speed 102 ≤ rpm ≤ 109	Booster pumps for crosshead lubrication: NEEDED	PAAD251298 PAAD251299
Rating Field C	Engine rated with CMCR speed 109 ≤ rpm ≤ 127	Booster pumps for crosshead lubrication: NOT NEEDED	PAAD251296 PAAD251297
		Booster pumps for crosshead lubrication: OPTIONAL	PAAD251298 PAAD251299

Quantity PER ENGINE				SEQ NO	Material ID	Material Name / Dimension, Occ	Standard or Drawing	Basic Material / Material Standard	Weight GR./NET
1	1	1	1	006	107.341.455.500	INSTRUCTION FOR FLUSHING	107.341.455		0,001
1	1	1	1	005	PAAD039570	LUBRICATING OIL DRAIN TANK	DAAD016269		0,001
1	1	1	1	004	107.246.097.500	LUBRICATING OIL DRAIN TANK	107.246.097		0,001
-	1	-	1	003	PAAD245338	LUBRICATING OIL SYSTEM external turbocharger LO system	DAAD083642		0,001
1	1	-	-	002	PAAD235846	LUBRICATING OIL SYSTEM with HP pumps	DAAD080720		0,001
-	-	1	1	001	PAAD038792	LUBRICATING OIL SYSTEM without HP pumps	DAAD015999		0,001

Material ID			
PAAD251299	PAAD251298	PAAD251297	PAAD251296

Free space for lic.

Q-Code: XXXXX

Standard: ISO; JIS

Main Drw.: H

Modif.	Number	Drawn date	Number	Drawn date	Number	Drawn date	Number	Drawn date

WIN GD Winterthur Gas & Diesel

Product: 7RT-flex48T-D

LUBRICATING OIL SYSTEM

Schmieroelsystem

Units mm kg	NX		Basic Material		Net Weight
Made	18.01.2017 dki021 DH.Kim	Scale -	Size A3	Page 1/1	Material ID
Chkd	03.02.2017 wwa008 Wang	Design Group 9722	Drawing ID DAAD086379		Rev. -
Appd	03.02.2017 mhu019 Hug				

SURFACE PROTECTION SEE GROUP 0344

TOLERANCING PRINCIPLE ISO8015

GENERAL TOLERANCES ACCORDING TO ISO2768-mK

Approved

PD - PRODUCTION DRAWING - Confidential

Copyright Winterthur Gas & Diesel Ltd. All rights reserved. By taking possession of the drawing the recipient recognizes and honours these rights. Neither the whole nor any part of this drawing may be used in any way for construction, fabrication, marketing or any other purpose nor copied in any way nor made accessible to third parties without the previous written consent of Winterthur Gas & Diesel Ltd.

Options			Executions			
	Turbocharger lubrication	INTERNAL	X		X	
		EXTERNAL		X		X
	Booster pumps for crosshead lubrication	WITH	X	X		
		WITHOUT			X	X
			Net Weight			
			0,001	0,001	0,001	0,001

Rating Field A	Engine rated with CMCR speed 102 ≤ rpm ≤ 109	Booster pumps for crosshead lubrication: NEEDED	PAAD251302 PAAD251303
Rating Field C	Engine rated with CMCR speed 109 ≤ rpm ≤ 127	Booster pumps for crosshead lubrication: NOT NEEDED	PAAD251300 PAAD251301
		Booster pumps for crosshead lubrication: OPTIONAL	PAAD251302 PAAD251303

Quantity PER ENGINE				SEQ NO	Material ID	Material Name / Dimension, Occ	Standard or Drawing	Basic Material / Material Standard	Weight GR./NET
1	1	1	1	006	107.341.455.500	INSTRUCTION FOR FLUSHING	107.341.455		0,001
1	1	1	1	005	PAAD039570	LUBRICATING OIL DRAIN TANK	DAAD016269		0,001
1	1	1	1	004	107.246.097.500	LUBRICATING OIL DRAIN TANK	107.246.097		0,001
-	1	-	1	003	PAAD245338	LUBRICATING OIL SYSTEM external turbocharger LO system	DAAD083642		0,001
1	1	-	-	002	PAAD235846	LUBRICATING OIL SYSTEM with HP pumps	DAAD080720		0,001
-	-	1	1	001	PAAD038792	LUBRICATING OIL SYSTEM without HP pumps	DAAD015999		0,001

PAAD251303	PAAD251302	PAAD251301	PAAD251300
Material ID			

Free space for lic.

Q-Code: XXXXX

Standard: ISO; JIS

Main Drw.: H

Modif.	Number	Drawn date	Number	Drawn date	Number	Drawn date	Number	Drawn date

WIN GD Winterthur Gas & Diesel

Product: 8RT-flex48T-D

LUBRICATING OIL SYSTEM

Schmieroelsystem

Units mm kg	NX		Basic Material		Net Weight
Made	18.01.2017	dki021	DH.Kim	Scale –	Size A3 / Page 1/1 / Material ID
Chkd	03.02.2017	wwa008	Wang	Design Group 9722	Drawing ID DAAD086386 / Rev. –
Appd	03.02.2017	mhu019	Hug		

SURFACE PROTECTION SEE GROUP 0344

TOLERANCING PRINCIPLE ISO8015

GENERAL TOLERANCES ACCORDING TO ISO2768-mK

Approved

PD - PRODUCTION DRAWING - Confidential

Copyright Winterthur Gas & Diesel Ltd. All rights reserved. By taking possession of the drawing the recipient recognizes and honours these rights. Neither the whole nor any part of this drawing may be used in any way for construction, fabrication, marketing or any other purpose nor copied in any way nor made accessible to third parties without the previous written consent of Winterthur Gas & Diesel Ltd.

RT-flex48T-D

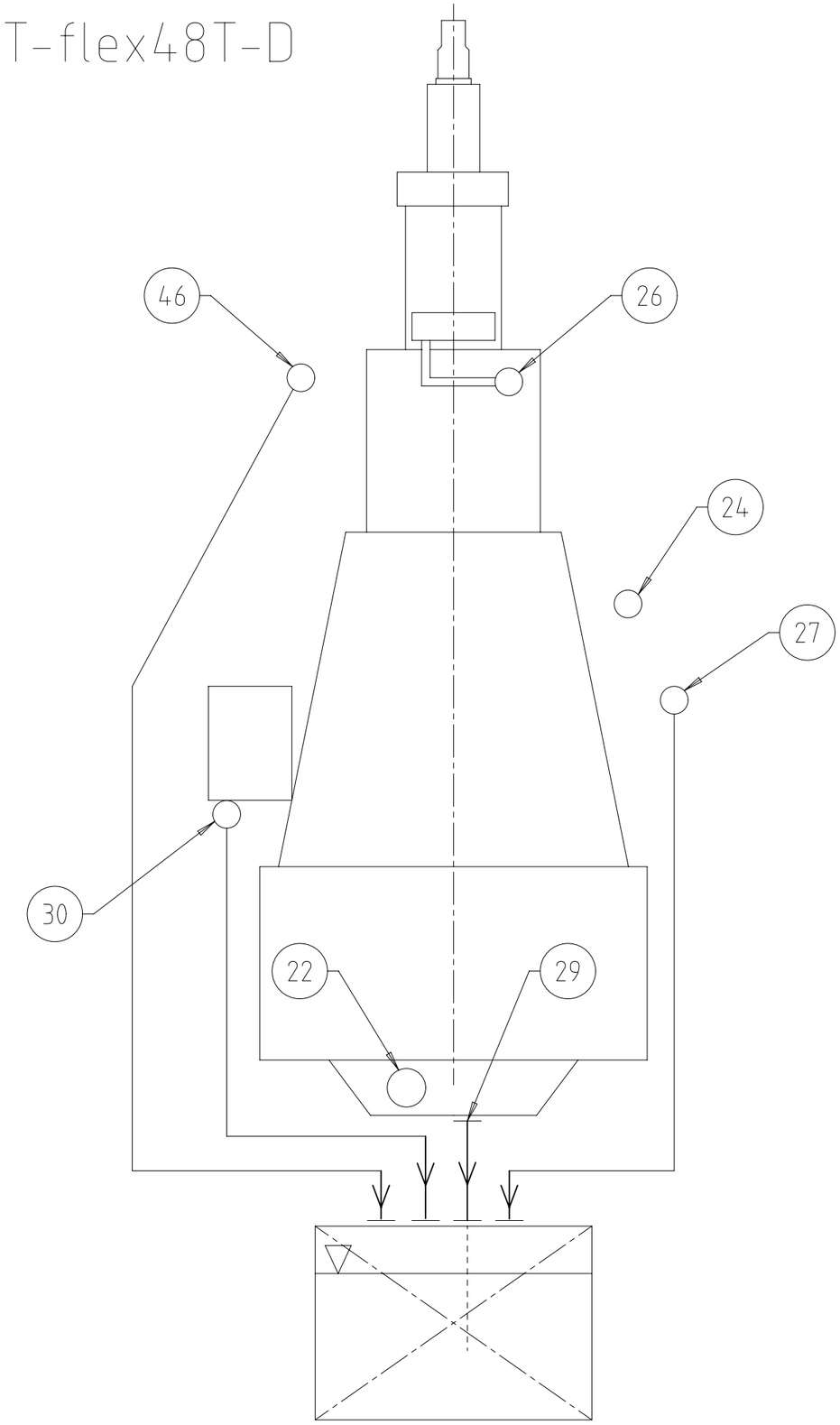

SPECIFICATION WHICH MUST BE MET

22	OUTLET - Lubricating oil from bedplate horizontal oil drain - FOR TESTBED ONLY! Not connected.
24	INLET - Lubricating oil - Lubricating oil temperature: - Controller set-point: 45 °C (controller type: PI) - Steady State condition: 45 ± 2 °C - Transient condition: 45 ± 4 °C - Lubricating oil pressure: 3.6-5.0 bar - Lubricating oil volume flow: according to GTD - Lubricating oil cleanliness: - Full flow filtered by 50 micron filter (absolute sphere passing mesh). - Bypass cleaning of lubricating oil in drain tank by self-cleaning centrifugal separator.
26	INLET - Cylinder lubrictaing oil - Cylinder lubricating oil temperature: 40^{+10}_{-5} °C. - Cylinder lubricating oil static pressure: min 0.4 bar.
27	OUTLET - Flushing oil from automatic filter - Back-flushing oil to be returned to the lubricating oil drain tank. - The back-flushing pipe must not be connected to other drain pipes.
29	OUTLET - Lubricating oil from bedplate vertical oil drain - Drain to lubricating oil drain tank: Drain pipe position must within the permissible range as specified on the LO drain tank drawing. Final position to be informed by the shipyard to the engine manufacturer.
30	OUTLET - Oil drain supply unit - Free flow by gravity to lubricating oil drain tank.
46	OUTLET - Oil drain servo system, oil return from engine free end - Free space by gravity to lubricating oil drain tank.

Free space for lic.

Q-Code: XXXXX

Standard: ISO; JIS

Main Drw.

Modif.	Number	Drawn date	Number	Drawn date	Number	Drawn date	Number	Drawn date
B	EAAD086020	04.11.2015	C EAAD086531	22.06.2016	D EAAD088812	08.05.2018	E EAAD089872	17.10.2018

WIN GD Winterthur Gas & Diesel

Product: RT-flex48T-D

LUBRICATING OIL SYSTEM
MAIN CIRCUIT
Schmieroelsystem

Units mm kg | NX | Basic Material | Net Weight 0,001

SURFACE PROTECTION SEE GROUP 0344	Made 30.03.2011 mhu019 M.Hug	Scale -	Size A3 / Page 1/3 / Material ID PAAD038792
TOLERANCING PRINCIPLE ISO8015	Chkd 02.05.2011 sfe006 Feuerstein	Design Group 9722	Drawing ID DAAD015999 / Rev. E
GENERAL TOLERANCES ACCORDING TO ISO2768-mK	Appd 03.05.2011 dst009 Strödecke		

Approved

DID - DIMENSIONAL DRAWING - Confidential

Copyright Winterthur Gas & Diesel Ltd. All rights reserved. By taking possession of the drawing the recipient recognizes and honours these rights. Neither the whole nor any part of this drawing may be used in any way for construction, fabrication, marketing or any other purpose nor copied in any way nor made accessible to third parties without the previous written consent of Winterthur Gas & Diesel Ltd.

SYSTEM PROPOSAL
System oil and cylinder LO supply

Pos.	ENGINE COMPONENTS *3)
EC01	Automatic filter

Pos.	ENGINE CONNECTIONS *2)
22	OUTLET - Lubrication oil from bedplate horizontal oil drain *10)
24	INLET - Lubricating oil
26	INLET - Crosshead lubricating oil
27	OUTLET - Flushing oil pipe automatic filter *13)
29	OUTLET - Lubricating oil from bedplate vertical oil drain
30	OUTLET - Oil drain supply unit
35	OUTLET - Oil drain servo system, oil return from engine free end

Number of cylinders			5	6	7	8
Main Engine RT-flex48T-D (R1 rated)	power	(kW)	7275	8730	10185	11640
	speed	(rpm)	127			
Proposal for dimensioning *11)						
LO drain tank	capacity	(m³)	For capacities refer to drawing "LO drain tank-Filling Guideline"			
LO pump	capacity	(m³/h)	refer to GTD			
Cyl. LO storage tank	capacity	(m³)	Based on a feed rate of 1g/kWh (pulse)			
Cyl. LO service tank *14)	capacity	(m³)	0.4	0.45	0.55	0.6
Nominal pipe diameter	A	DN	200	200	200	200
	B	DN	150	150	200	200
	C	DN	32	32	32	32
	D	The pipe diameters for the LO separator are sized according to the effective throughput capacity of the separator and according to the separator manufacturer's recommendations.				
	E					
	F	DN	50	50	50	50
	G	DN	40	40	40	40
	H	DN	50	50	50	50
	I	DN	50	50	65	65

Pos.	SYSTEM COMPONENTS *1)
001	Lubricating oil drain tank (sump tank)
002	Heating device
003	Suction strainer *12)
004	Lubricating oil pump
005	Lubricating oil cooler
006	Autom. temperature control valve, constant temp. at engine inlet: 45°C
007	Automatic self-cleaning filter, 50 micron, with backflushing oil treatment *9) *13) (E)
008	Transition piece (adaptor) *8)
009	Deck connection
010	Low BN cylinder lubricating oil storage tank *5)
011	Low BN cylinder lubricating oil service tank *5)
012	Three-way valve, manually or remotely operated
013	High BN cylinder lubricating oil storage tank *5)
014	High BN cylinder lubricating oil service tank *5)
015	Pressure regulating valve *6)

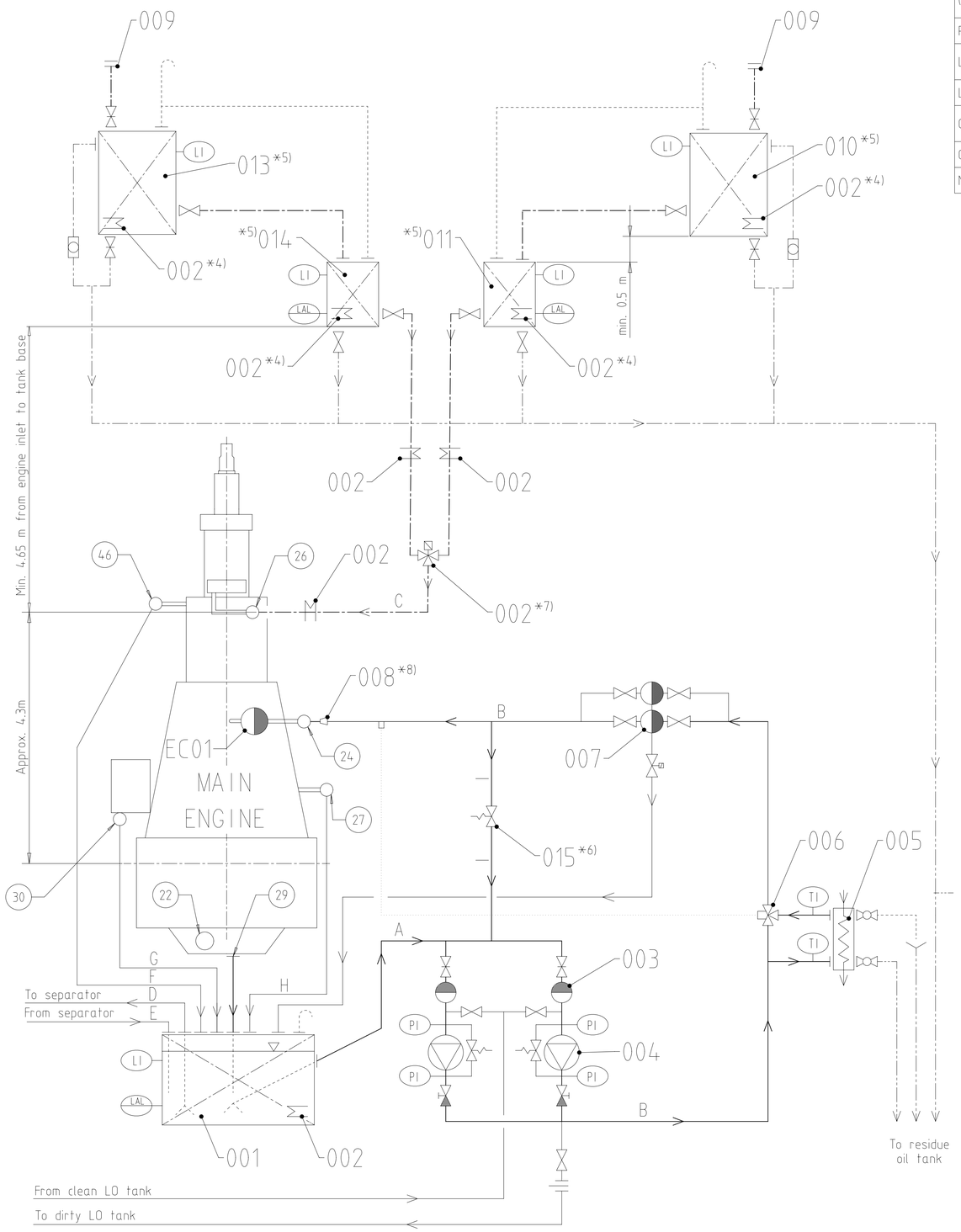

Remarks:

- Air vent pipes and drain valves where necessary.
- Air vent and drain pipes must be fully functional at all inclinations of the ship at which the engine must be operational.

*1) To be delivered by external supplier and to be installed by the shipyard.

*2) Refer to "Pipe Connection Plan" for exact position and execution of the pipe connection.

*3) To be delivered by the engine manufacturer, i.e. already equipped on engine side.

*4) Optional heating coil

*5) The cylinder LO service tank with metering device provides the possibility to supervise the cylinder LO consumption of the engine. Alternatively, if the cylinder LO service tank is omitted, i.e. the engine is fed directly from the cylinder LO storage tank, the storage tank has to be located at the same minimum installation height as specified for the service tank, respectively a certain level higher if additional elements are installed in the supply line to the engine (e.g. a flowmeter) to compensate the pressure drop created.

*6) The bypass line with the pressure regulating valve can be omitted if one of the following conditions is fulfilled:
- The pump speed is adjusted according to the required pressure at engine inlet, e.g. by a frequency controller
- The pumps have built-in pressure regulating valves

The pump built-in safety valve is in any case mandatory and not to be used for pressure regulation (pure safety function).

*7) Three-way valve has to be fitted as close as possible to the engine inlet. The reason is that the oil volume after the change-over valve has to be kept small in order to allow a swift change-over between the cylinder oils of different BN.

*8) Installed as required (check with the "Pipe Connection Plan")

*9) If the back-flushing process is driven by compressed air and the back-flushing oil is returned to the LO drain tank the oil outlet must be above the max. oil level or as an alternative a drain pipe with venting holes above the max. oil level needs to be installed to avoid back-flushing air blowing into the oil. Back-flushing oil must be treated.

*10) Not connected on board - just for testbed

*11) All capacities and the given pipe diameters are valid for the mentioned engine rating, including the oil amount for integrated TC lubrication, but excluding additional required oil for applied damper and/or PTO gear and/or all other externally installed ancillaries which are fed by system oil. To make the project specific layout, under consideration of the actual required flow rates/capacities, the guideline as given within DG9730 - "Fluid velocities and flow rates, recommended values for pipework of diesel plants" has to be observed.

*12) Mesh size according to pump suppliers recommendation.

*13) The back-flushing pipe must not be connected to other drain pipes.
If the oil is returned to the LO drain tank it is recommended to connect the oil outlet
- as close as possible to the separator suction pipe
- opposite to the main LO pump, i.e.
  - on tanks' forward end if the main LO pump is on tanks' aft end
  - on tanks' aft end if the main LO pump is on tanks' forward end
  - on tanks' forward or aft end if the main LO pump is in the middle of the tank.

*14) The proposed cylinder LO services tank capacity takes into account a filling interval of 2 days based on the above mentioned feed rate.

Bearing LO pipes
Cylinder LO pipes
Cylinder LO pipes trace heated and insulated
Transfer/dirty LO pipes
Overflow/drain pipes
Air vent pipes
Pipes on engine
Pipe connections

Model	Number	Drawn date	Number	Drawn date	Number	Drawn date	Number	Drawn date
	B EAAD086020	04.11.2015	C EAAD086531	22.06.2016	D EAAD088812	08.05.2018	E EAAD089872	17.10.2018

Free space for Ic

Q-Code XXXXX
Standard ISO; JIS
Main Drw.

WIN GD Winterthur Gas & Diesel

Product: RT-flex48T-D

LUBRICATING OIL SYSTEM
MAIN CIRCUIT
Schmieroelsystem

Units mm kg	NX	Basic Material	Net Weight 0,001
Made 30.03.2011 mhu019 M.Hug		Scale -	Size A1 / Page 2/3 / Material ID PAAD038792
Chkd 02.05.2011 sfe006 Feuerstein		Design Group 9722	Drawing ID DAAD015999 / Rev. E
Appd 03.05.2011 dst009 Strödecke			

SURFACE PROTECTION SEE GROUP 0344
TOLERANCING PRINCIPLE ISO8015
GENERAL TOLERANCES ACCORDING TO ISO2768-mK

Approved

DO - DIMENSIONAL DRAWING - Confidential

Copyright Winterthur Gas & Diesel Ltd. All rights reserved. By taking possession of the drawing the recipient recognizes and honours these rights. Neither the whole nor any part of this drawing may be used in any way for construction, fabrication, marketing or any other purpose nor copied in any way nor made accessible to third parties without the previous written consent of Winterthur Gas & Diesel Ltd.

SYSTEM PROPOSAL - LO treatment system

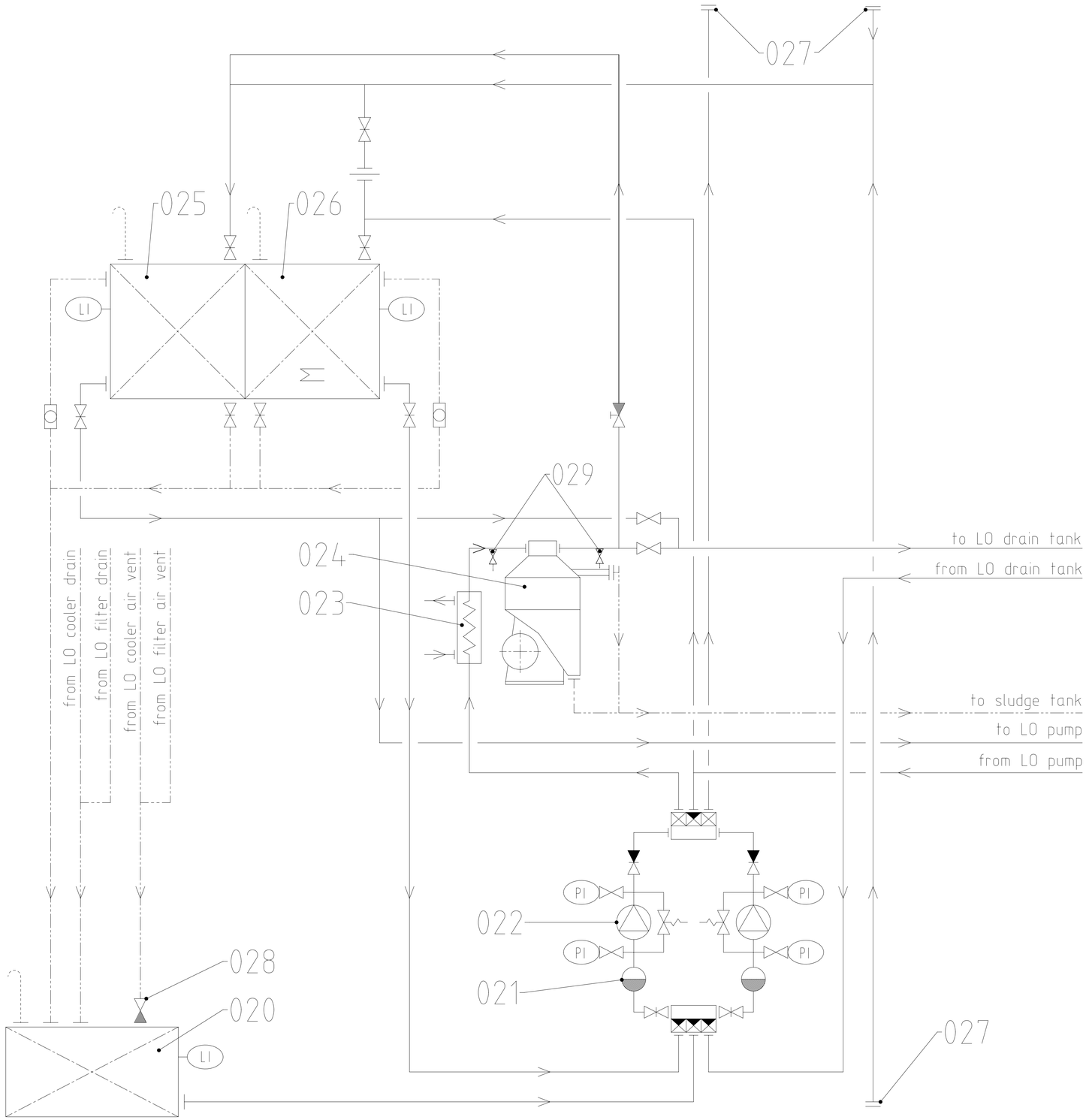

Pos.	SYSTEM COMPONENTS *1)	
020	Residue oil tank	
021	Suction strainer *12)	
022	Lubricating oil pump	one for transfer and separator service
		one for separator service
023	Lubricating oil heater with relief valve and temperature control	
024	Self-cleaning centrifugal separator	
025	Clean lubricating oil tank	
026	Dirty lubricating oil tank	
027	Deck connection	
028	Float non-return valve	
029	LO sampling cock *20)	

RT-flex48T-D			Number of cylinders			
			5	6	7	8
Clean LO tank	capacity	(m^3)	equal or bigger than LO drain tank volume			
Dirty LO tank	capacity	(m^3)	equal or bigger than LO drain tank volume			
LO separator	capacity	(l/h)	820	990	1150	1320
Residue oil tank	capacity	(m^3)				

Remarks:

- Air vents and drain valves where necessary
- Air vent and drain pipes must be fully functional at all inclination angles of the ship at which the engine must be operational (check Class rules)
- Pipe diameters to be designed according to shipyards' practice and component suppliers' recommendations

*1) To be delivered by external supplier and to be installed by the shipyard.

*12) Mesh size according to pump suppliers recommendation.

*20) Recommended position for LO sampling to check LO quality / treatment efficiency.

Main separating piping
Transfer/dirty LO pipes
Overflow/drain pipes
Air vent pipes

Modif.	Number	Drawn date	Number	Drawn date	Number	Drawn date	Number	Drawn date
B	EAAD086020	04.11.2015	C EAAD086531	22.06.2016	D EAAD088812	08.05.2018	E EAAD089872	17.10.2018

Free space for lic.

Q-Code: XXXXX
Standard: ISO; JIS
Main Drw.

WIN GD Winterthur Gas & Diesel

Product: RT-flex48T-D

LUBRICATING OIL SYSTEM
MAIN CIRCUIT
Schmieroelsystem

Units mm kg	NX	Basic Material	Net Weight 0,001
Made	30.03.2011 mhu019 M.Hug	Scale -	Size A1 / Page 3/3 / Material ID PAAD038792
Chkd	02.05.2011 sfe006 Feuerstein	Design Group 9722	
Appd	03.05.2011 dst009 Strödecke	Drawing ID DAAD015999	Rev. E

SURFACE PROTECTION SEE GROUP 0344
TOLERANCING PRINCIPLE ISO8015
GENERAL TOLERANCES ACCORDING TO ISO2768-mK

DD - DIMENSIONAL DRAWING - Confidential

Approved

Copyright Winterthur Gas & Diesel Ltd. All rights reserved. By taking possession of the drawing the recipient recognizes and honours these rights. Neither the whole nor any part of this drawing may be used in any way for construction, fabrication, marketing or any other purpose nor copied in any way nor made accessible to third parties without the previous written consent of Winterthur Gas & Diesel Ltd.

RT-flex48T-D

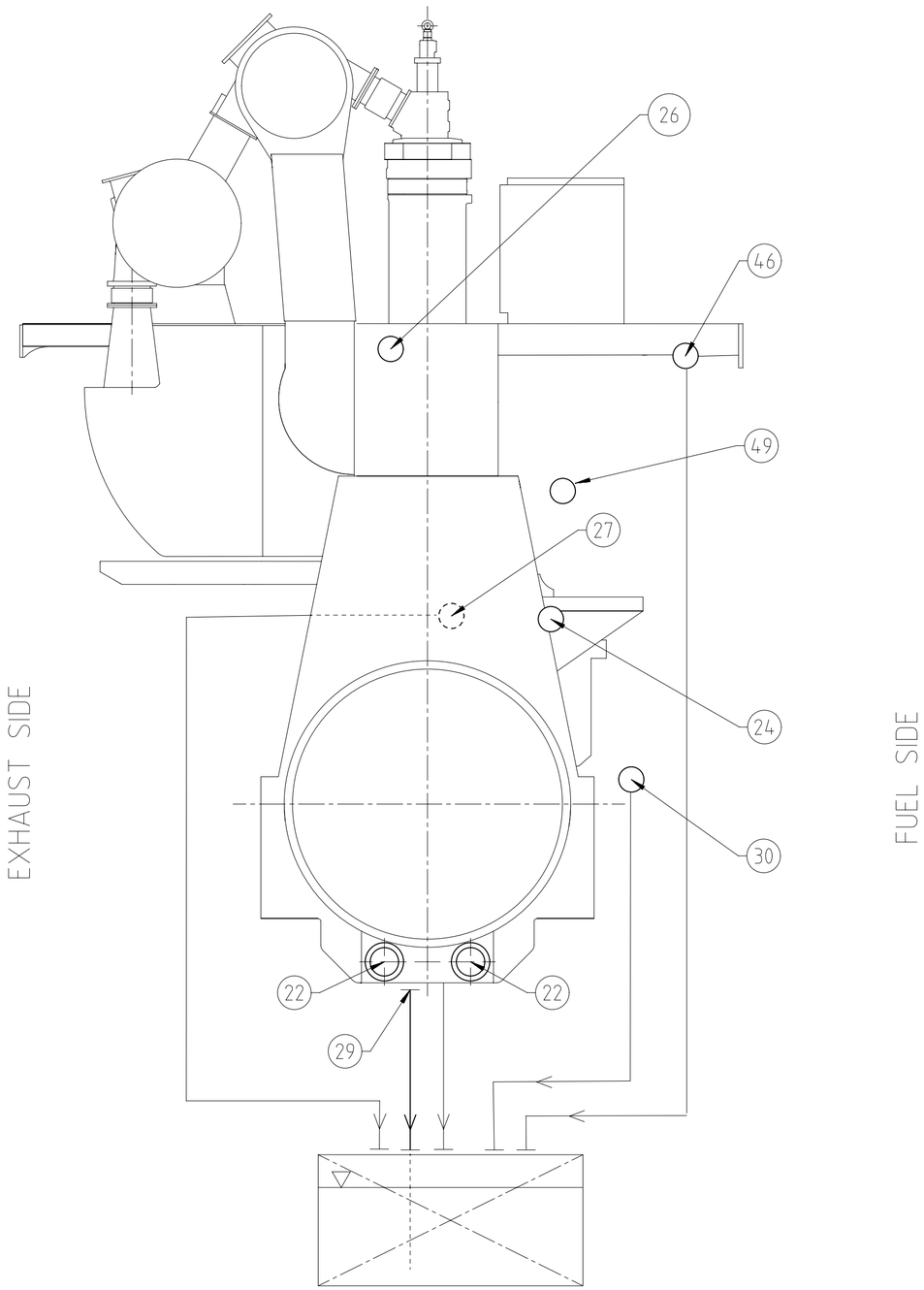

SPECIFICATION WHICH MUST BE MET

22	OUTLET - Lubricating oil from bedplate horizontal oil drain - For TESTBED ONLY. Not connected.

24	INLET - Lubricating oil
	- Lubricating oil temperature:
	  - Controller set-point: 45 °C (controller type: PI)
	  - Steady state conditions: 45 ± 2 °C
	  - Transient condition: 45 ± 4 °C
	- Lubricating oil pressure: 3.6-5.0 bar
	- Lubricating oil volume flow: according to GTD
	- Lubricating oil cleanliness:
	  - Full flow filtered by 50 micron filter (absolute sphere passing mesh).
	  - Bypass cleaning of lubricating oil in drain tank by self-cleaning centrifugal separator.

26	INLET - Cylinder lubricating oil - Cylinder lubricating oil temperature: 40 $^{+10}_{-5}$ °C. - Cylinder lubricating oil static pressure: min 0.4 bar.
27	OUTLET - Flushing pipe automatic filter - Back-flushing oil return to lubricating oil drain tank - Back-flushing pipe must not connected with other drain pipes
29	OUTLET - Lubricating oil from bedplate vertical oil drain - Drain to lubricating oil drain tank: Drain pipe position must within the permissible range as specified on the LO drain tank drawing Final position to be informed by the shipyard to the engine manufacturer.
30	OUTLET - Oil drain supply unit - Free flow by gravity to lubricating oil drain tank.
46	OUTLET - Oil drain servo system, oil return from engine free end - Free flow by gravity to lubricating oil drain tank.

49	INLET - Crosshead lubricating oil
	
	- Lubricating oil temperature:
	  - Controller set-point: 45 °C (controller type: PI)
	  - Steady state conditions: 45 ± 2 °C
	  - Transient condition: 45 ± 4 °C
	- Lubricating oil pressure: 10-12 bar
	- Lubricating oil volume flow: according to GTD
	- Lubricating oil cleanliness:
	  - Full flow filtered by 50 micron filter (absolute sphere passing mesh).
	  - Bypass cleaning of lubricating oil in drain tank by self-cleaning centrifugal separator.

Free space for lic.

Q-Code: XXXXX
Standard: ISO; JIS
Main Drw.

Modif.	Number	Drawn date	Number	Drawn date	Number	Drawn date	Number	Drawn date
A	EAAD088812	08.05.2018	B EAAD089872	05.10.2018				

WIN GD Winterthur Gas & Diesel

Product: RT-flex48T-D

LUBRICATING OIL SYSTEM

Schmieroelsystem

Units mm kg | NX | Basic Material | Net Weight 0,001

SURFACE PROTECTION SEE GROUP 0344
TOLERANCING PRINCIPLE ISO8015
GENERAL TOLERANCES ACCORDING TO ISO2768-mK

Made	17.01.2017	dki021	DH.Kim
Chkd	03.02.2017	wwa008	Wang
Appd	03.02.2017	mhu019	Hug

Scale -
Design Group 9722
Size A2 | Page 1/3 | Material ID PAAD235846
Drawing ID DAAD080720 | Rev. B

Approved

DID - DIMENSIONAL DRAWING - Confidential

Copyright Winterthur Gas & Diesel Ltd. All rights reserved. By taking possession of the drawing the recipient recognizes and honours these rights. Neither the whole nor any part of this drawing may be used in any way for construction, fabrication, marketing or any other purpose nor copied in any way nor made accessible to third parties without the previous written consent of Winterthur Gas & Diesel Ltd.

SYSTEM PROPOSAL
System oil and cylinder LO supply

Pos.	ENGINE COMPONENTS *3)
EC01	Automatic filter

Pos.	ENGINE CONNECTIONS *2)
22	OUTLET - Lubrication oil from bedplate horizontal oil drain *10)
24	INLET - Lubricating oil
26	INLET - Cylinder lubricating oil
27	OUTLET - Flushing oil from automatic filter *14)
29	OUTLET - Lubricating oil from bedplate vertical oil drain
30	OUTLET - Oil drain supply unit
46	OUTLET - Oil drain servo system, oil return from engine free end
49	INTLET - Crosshead lubricating oil

Number of cylinders			5	6	7	8
Main Engine RT-flex48T-D rated with CMCR speed 108rpm	power	(kW)	5999	7199	8399	9598
	speed	(rpm)	108			
Proposal for dimensioning *11)						
LO drain tank	capacity	(m^3)	For capacities refer to drawing "LO drain tank-Filling Guideline"			
Main LO pump	capacity	(m^3/h)	refer to GTD			
Cylinder LO storage tank	capacity	(m^3)	Based on a feed rate of 1g/kWh (pulse)			
Cylinder LO service tank *15)	capacity	(m^3)	0.40	0.45	0.55	0.60
Crosshead LO pump	capacity	(m^3/h)	refer to GTD			
Nominal pipe diameter	A	DN	200	200	200	250
	B	DN	150	200	200	200
	C	DN	65	80	80	80
	D	DN	80	80	80	80
	E	DN	50	50	65	65
	F	DN	32	32	32	32
	G	DN	150	150	200	200
	H	DN	32	32	32	32
	I	DN	40	40	40	40
	J	DN	20	20	20	20
	K	DN	50	50	50	50
	L	The pipe diameters for the LO separator are sized according to the effective throughput capacity of the separator and according to the separator manufacturer's recommendations.				
	M					

Pos.	SYSTEM COMPONENTS *1)
001	Lubricating oil drain tank (sump tank)
002	Heating device
003	Suction strainer *12)
004	Lubricating oil pump
005	Lubricating oil cooler
006	Autom. temperature control valve, constant temp. at engine inlet: 45°C
007	Automatic self-cleaning filter, 50 micron, with backflushing oil treatment *13) *14) (B)
008	Transition piece (adaptor) *8)
009	Deck connection
010	Low BN cylinder lubricating oil storage tank *5)
011	Low BN cylinder lubricating oil service tank *5)
012	Three-way valve, manually or remotely operated *7)
013	Pressure regulating *6)
014	High BN cylinder lubricating oil storage tank *5)
015	High BN cylinder lubricating oil service tank *5)
016	Crosshead lubricating oil pump *9)

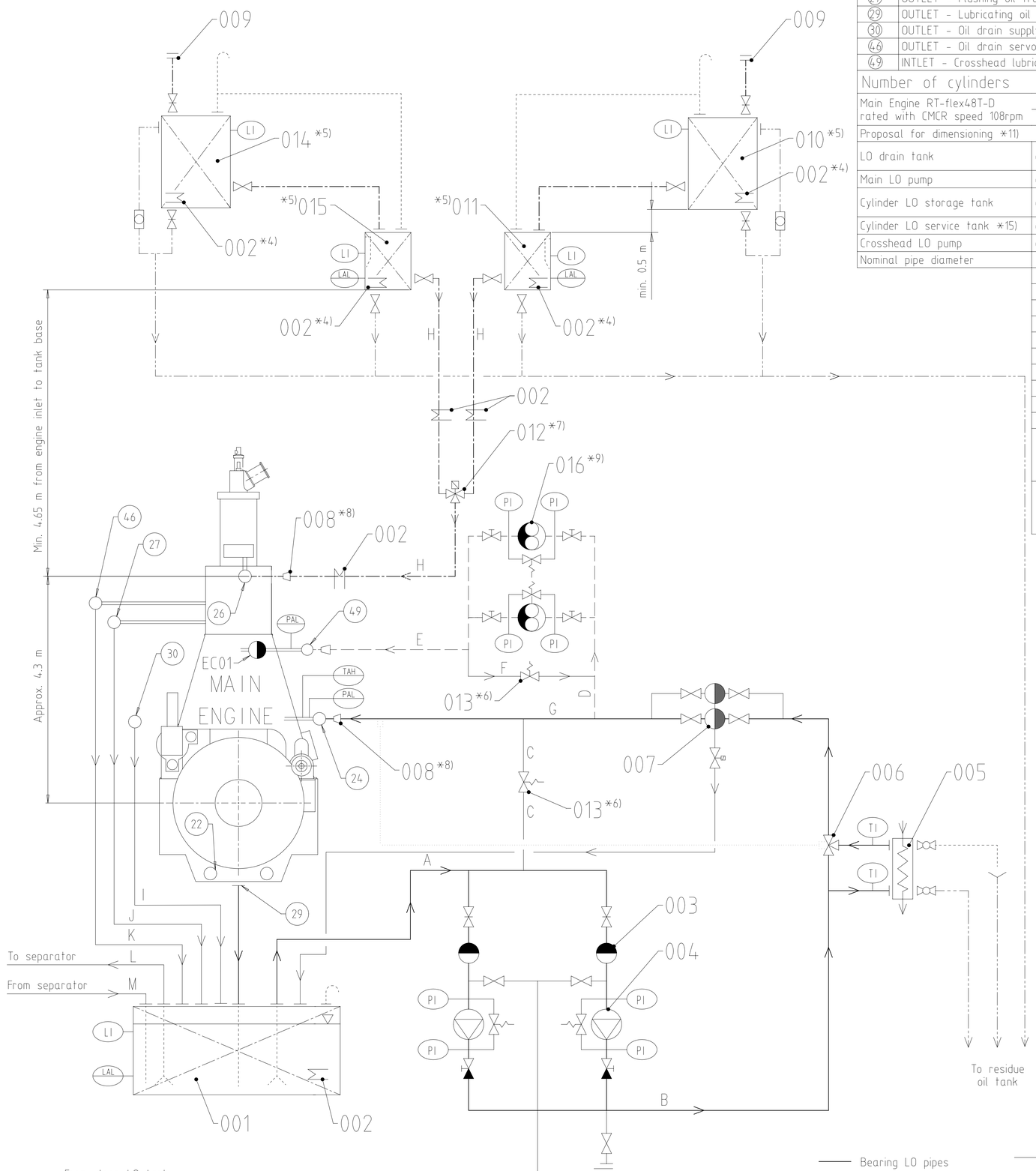

Remarks:

- Air vent pipes and drain valves where necessary.
- Air vent and drain pipes must be fully functional at all inclination angles of the ship at which the engine must be operational.

*1) To be delivered by external supplier and to be installed by the shipyard.

*2) Refer to "Pipe Connection Plan" for exact position and execution of the pipe connection.

*3) To be delivered by the engine manufacturer, i.e. already equipped on engine side.

*4) Optional heating coil

*5) The cylinder LO service tank with metering device provides the possibility to supervise the cylinder LO consumption of the engine. Alternatively, if the cylinder LO service tank is omitted, i.e. the engine is fed directly from the cylinder LO storage tank, the storage tank has to be located at the same minimum installation height as specified for the service tank, respectively a certain level higher if additional elements are installed in the supply line to the engine (e.g. a flowmeter) to compensate the pressure drop created.

*6) The bypass line with the pressure regulating valve can be omitted if one of the following conditions is fulfilled:
- The pump speed is adjusted according to the required pressure at engine inlet, e.g. by a frequency controller
- The pumps have built-in pressure regulating valves

The pump built-in safety valve is in any case mandatory and not to be used for pressure regulation (pure safety function).

*7) Three-way valve has to be fitted as close as possible to the engine inlet. The reason is that the oil volume after the change-over valve has to be kept small in order to allow a swift change-over between the cylinder oils of different BN.

*8) Installed as required (check with the "Pipe Connection Plan")

*9) The LO pumps (pos. 004) and the crosshead LO pumps (pos. 016) are to be interlocked so that the crosshead LO pumps never can run alone.

*10) Not connected on board - just for testbed

*11) All capacities and the given pipe diameters are valid for the mentioned engine rating, including the oil amount for integrated TC lubrication, but excluding additional required oil for applied damper and/or PTO gear and/or all other externally installed ancillaries which are fed by system oil. To make the project specific layout, under consideration of the actual required flow rates / capacities, the guideline as given within DG9730 - "Fluid velocities and flow rates, recommended values for pipework of diesel plants" has to be observed.

*12) Mesh size according to pump suppliers recommendation.

*13) If the back-flushing process is driven by compressed air and the back-flushing oil is returned to the LO drain tank the oil outlet must be above the max. oil level or as an alternative a drain pipe with venting holes above the max. oil level needs to be installed to avoid back-flushing air blowing into the oil. Back-flushing oil must be treated.

*14) The back-flushing oil pipe must not be connected to other drain pipes. If the oil is returned to the LO drain tank it is recommended to connect the oil outlet
- as close as possible to the separator suction pipe
- opposite to the main LO pump, i.e.
  - on tanks' forward end if the main LO pump is on tanks' aft end
  - on tanks' aft end if the main LO pump is on tanks' forward end
  - on tanks' forward or aft end if the main LO pump is in the middle of the tank.

*15) The proposed cylinder LO services tank capacity takes into account a filling interval of 2 days based on the above mentioned feed rate.

Modif.	Number	Drawn date	Number	Drawn date	Number	Drawn date	Number	Drawn date
A	EAAD088812	08.05.2018	B EAAD089872	05.10.2018				

Free space for lic.

Q-Code XXXXX

Standard ISO; JIS

Main Drw.

Product RT-flex48T-D

WIN GD Winterthur Gas & Diesel

LUBRICATING OIL SYSTEM

Schmieroelsystem

Units	mm kg	NX	Basic Material			Net Weight 0,001
Made	17.01.2017	dki021 DH.Kim	Scale -	Size A1	Page 2/3	Material ID PAAD235846
Chkd	03.02.2017	wwa008 Wang	Design Group 9722	Drawing ID DAAD080720		Rev. B
Appd	03.02.2017	mhu019 Hug				

SURFACE PROTECTION SEE GROUP 0344

TOLERANCING PRINCIPLE ISO8015

GENERAL TOLERANCES ACCORDING TO ISO2768-mK

DD - DIMENSIONAL DRAWING - Confidential

Approved

Copyright Winterthur Gas & Diesel Ltd All rights reserved. By taking possession of the drawing the recipient recognizes and honours these rights. Neither the whole nor any part of this drawing may be used in any way for construction, fabrication, marketing or any other purpose nor copied in any way nor made accessible to third parties without the previous written consent of Winterthur Gas & Diesel Ltd.

SYSTEM PROPOSAL - LO treatment system

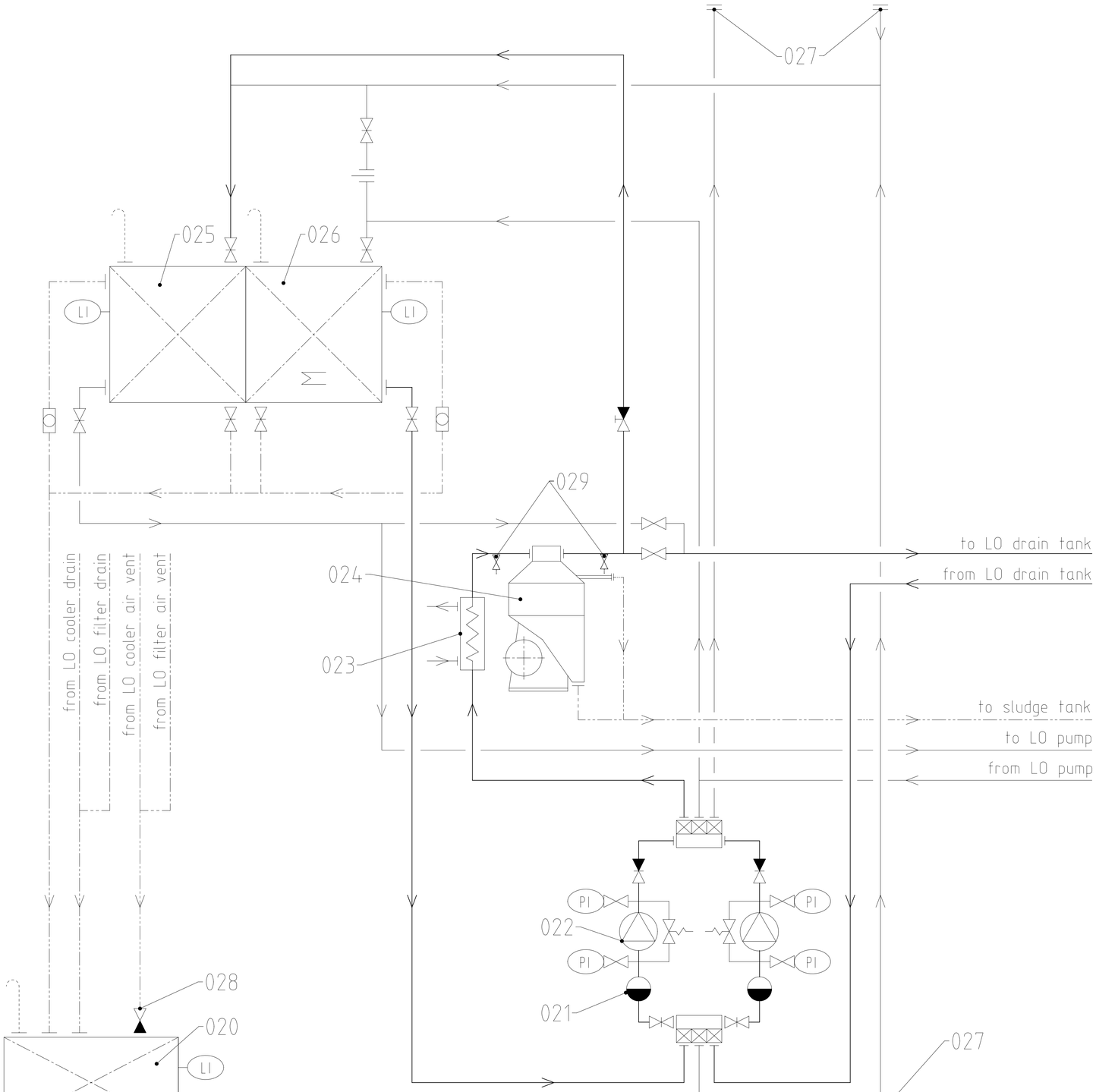

Pos.	SYSTEM COMPONENTS *1)
020	Residue oil tank
021	Suction strainer *12)
022	Lubricating oil pump for transfer and separator service
023	Lubricating oil pump for transfer and separator service
024	Self-cleaning centrifugal separator
025	Clean lubricating oil tank
026	Dirty lubricating oil tank
027	Deck connection
028	Float non-return valve
029	LO sampling cock *20)

RT-flex48T-D			Number of cylinder			
			5	6	7	8
Clean LO tank	capacity	(m^3)	equal or bigger than LO drain tank volume			
Dirty LO tank	capacity	(m^3)	equal or bigger than LO drain tank volume			
LO separator	capacity	(l/h)	820	990	1150	1320
Residue oil tank	capacity	(m^3)	Depending on ship's requirements			

Remarks:

- Air vents and drain valves where necessary
- Air vent and drain pipes must be fully functional at all inclination angles of the ship at which the engine must be operational (check Class rules)
- Pipe diameters to be designed according to shipyards' practice and component suppliers' recommendations

*1) To be delivered by external supplier and to be installed by the shipyard

*12) Mesh size according to pump suppliers recommendation.

*20) Recommended position for LO sampling to check LO quality / treatment efficiency.

Main separating piping
Main separating piping
Main separating piping
Main separating piping

Free space for lic.

Q-Code XXXXX
Standard ISO; JIS
Main Drw.

Modif.	Number	Drawn date	Number	Drawn date	Number	Drawn date	Number	Drawn date
A	EAAD088812	08.05.2018	B EAAD089872	05.10.2018				

WIN GD Winterthur Gas & Diesel

Product RT-flex48T-D

LUBRICATING OIL SYSTEM

Schmieroelsystem

Units mm kg NX | Basic Material | Net Weight 0,001

SURFACE PROTECTION SEE GROUP 0344	Made	17.01.2017	dki021	DH.Kim	Scale -
TOLERANCING PRINCIPLE ISO8015	Chkd	03.02.2017	wwa008	Wang	Design Group 9722
GENERAL TOLERANCES ACCORDING TO ISO2768-mK	Appd	03.02.2017	mhu019	Hug	

Size A1 | Page 3/3 | Material ID PAAD235846
Drawing ID DAAD080720 | Rev. B

Approved

DD - DIMENSIONAL DRAWING - Confidential

Copyright Winterthur Gas & Diesel Ltd All rights reserved. By taking possession of the drawing the recipient recognizes and honours these rights. Neither the whole nor any part of this drawing may be used in any way for construction, fabrication, marketing or any other purpose nor copied in any way nor made accessible to third parties without the previous written consent of Winterthur Gas & Diesel Ltd.

TANK PROPOSAL: EXECUTION FOR NORMAL TANK HEIGHT

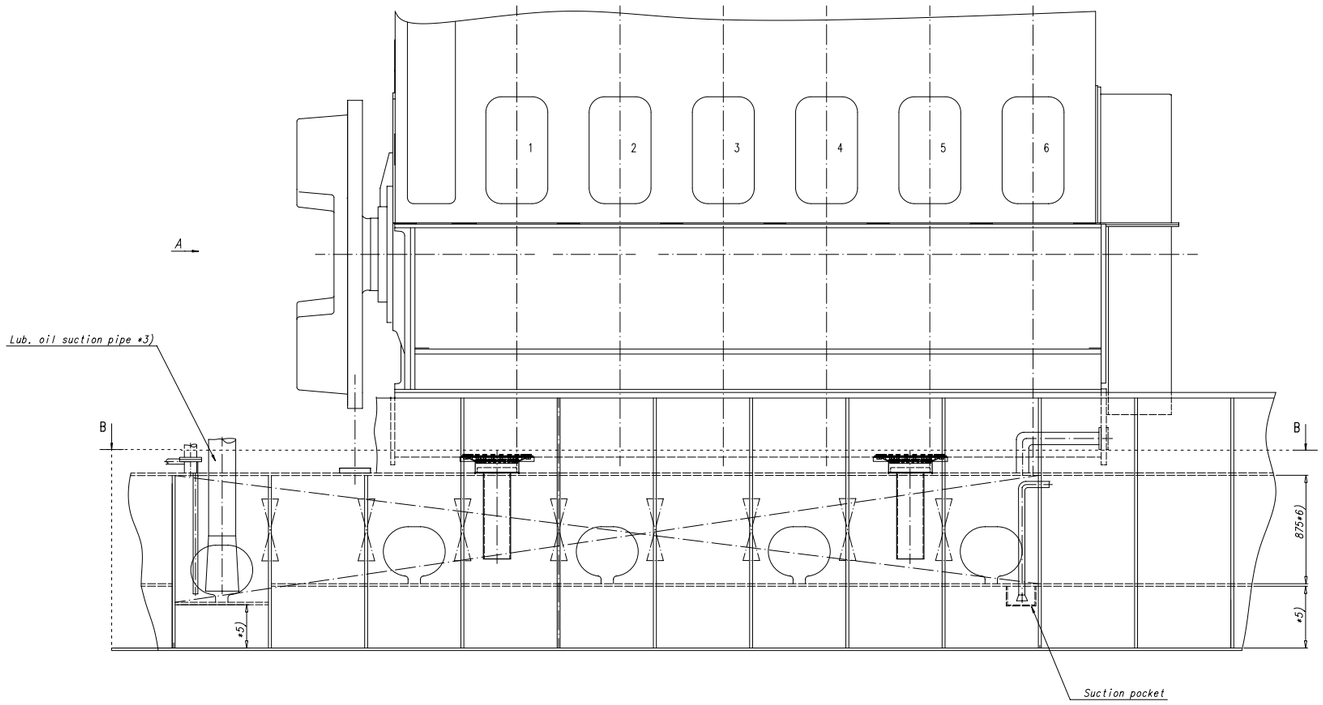

A (DRIVING END)

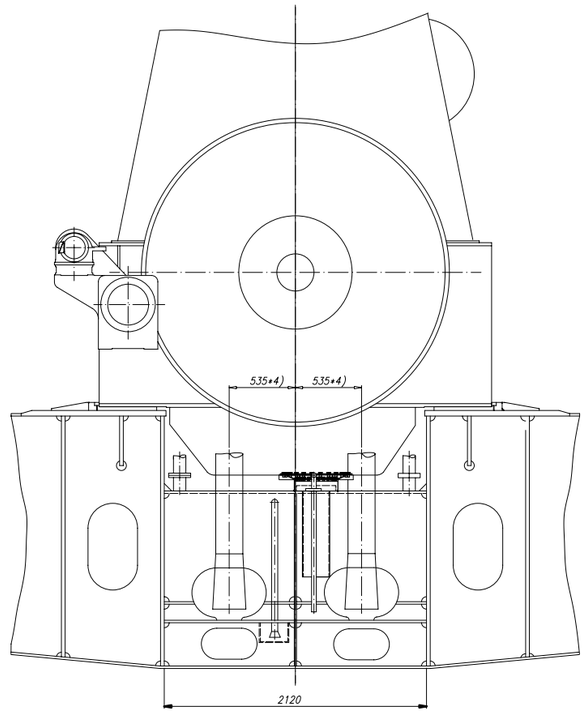

B-B

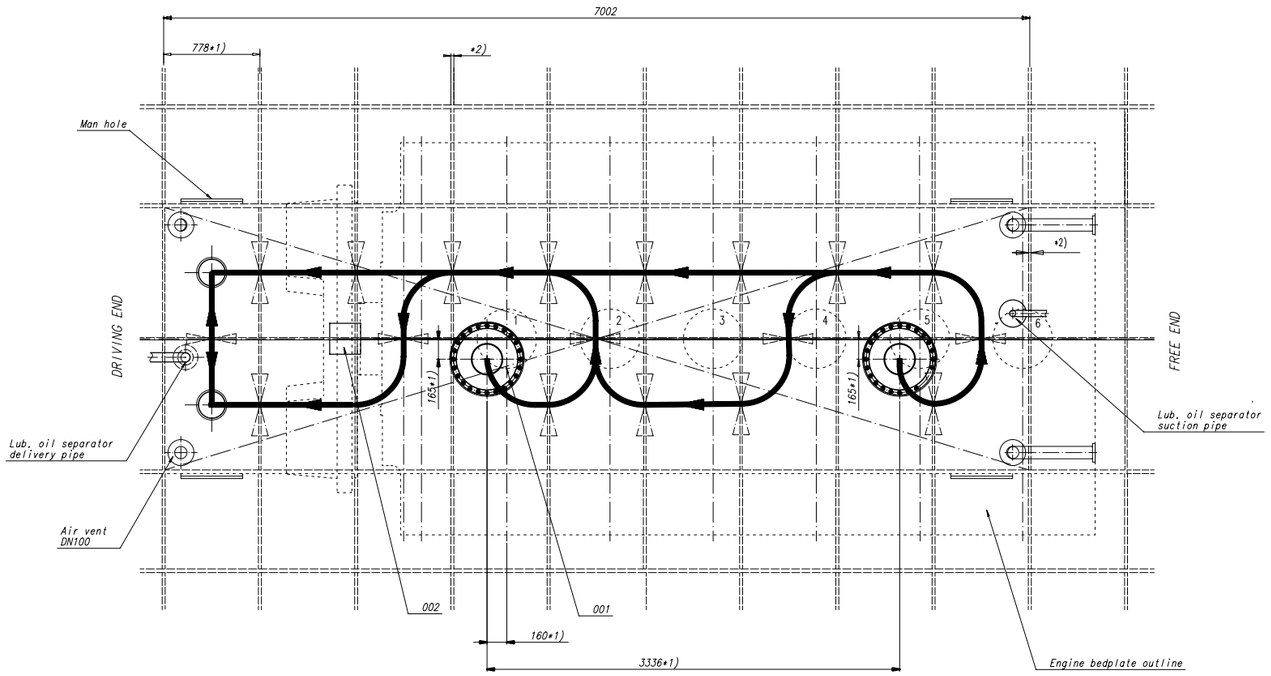

REMARKS:

*1) Proposal: final position to be determined by shipyard in accordance with engine builder (refer to design group 1110).

*2) For plate thickness refer to drawing "Engine foundation" design group 9710.

*3) Dimensions according to drawing "Lubricating oil system" main circuit.

*4) Proposal: dimension depends upon the size of the flywheel guard and oil pumps. Final dimension to be determined by shipyard.

*5) Distance according to the appropriate rules.

*6) Other tank heights / tank designs are possible. Refer to drawing "Lubricating oil drain tank, Filling guidelines" which contains appropriate design criteria for recommended oil filling volume, minimum oil retention volume and oil low level alarm height.

- The final layout of the drain tank has to comply with the rules of the relevant classification society.

QTY	SEQ NO	Material ID	Material Name	Dimension/Doc.Dimension	Standard or Drawing	Basic Material Material Standard	Weight GR/NET
1	002	107.246.799.200	PLATE		107.246.799		15.0
2	001	107.246.082.200	Vertical oil drain		107.246.082		52.6

Approved

Weld free space for JIS

Q-Code XXXXX

Standard ISO JIS

Work Dev.

Weld	Number	Drawn date	Number	Drawn date	Number	Drawn date	Number	Drawn date

WÄRTSILÄ

Product RT-flex48T-D

LUBRICATING OIL DRAIN TANK
WITH VERTICAL DRAINS

Units mm kg IDE

Basic Material

Net Weight 105

Made	19.04.2011 mhu019 M.Hug	Scale 1:16	Size A0	Page 1/1	Material ID	PAAD040057	
Chkd	02.05.2011 sfe006 Feuerstein	Design Group 9722					
Appd	03.05.2011 dst009 Stroedecke	Drawing ID	DAAD016403			Rev. –	

SURFACE PROTECTION SEE GROUP 0344
TOLERANCING PRINCIPLE ISO8015
GENERAL TOLERANCES ACCORDING TO ISO2768-mK

TP - PRODUCTION DRAWING - Confidential

Copyright Wärtsilä. All rights reserved. By taking possession of the drawing the recipient recognizes and honours these rights. Neither the whole nor any part of this drawing may be used in any way for construction, fabrication, marketing or any other purpose nor copied in any way nor made accessible to third parties without the previous written consent of Wärtsilä.

203
8 Cyls.

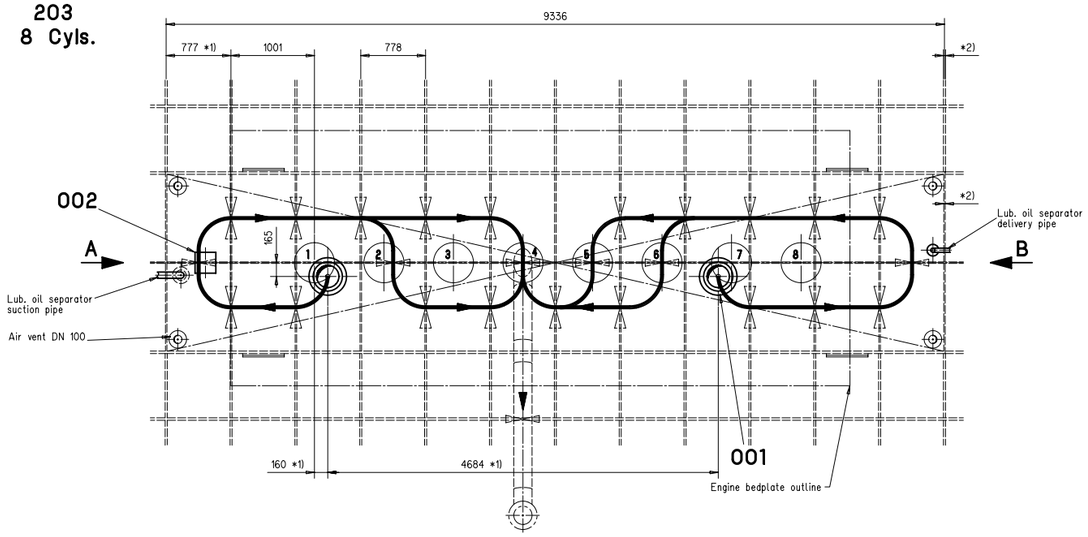

202
7 Cyls.

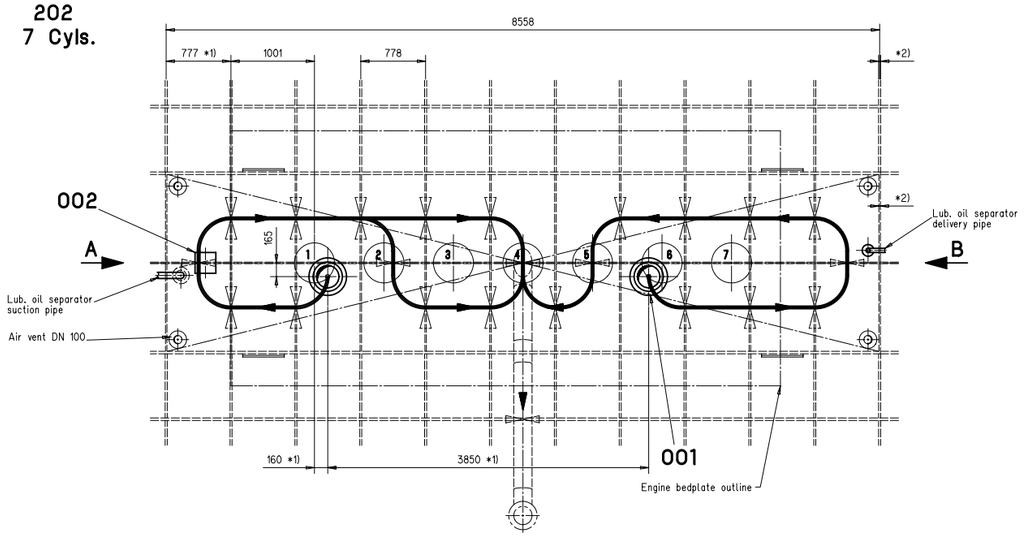

201
6 Cyls.

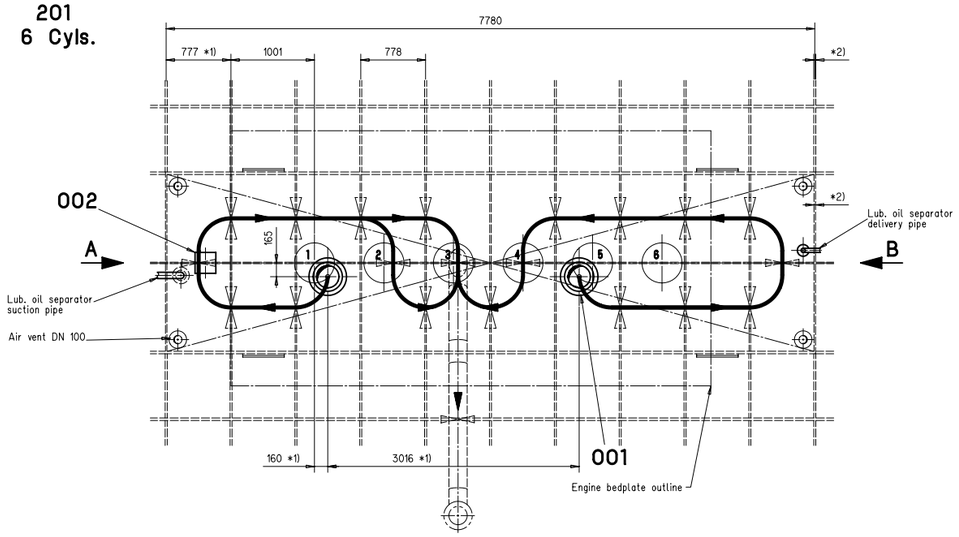

200
5 Cyls.

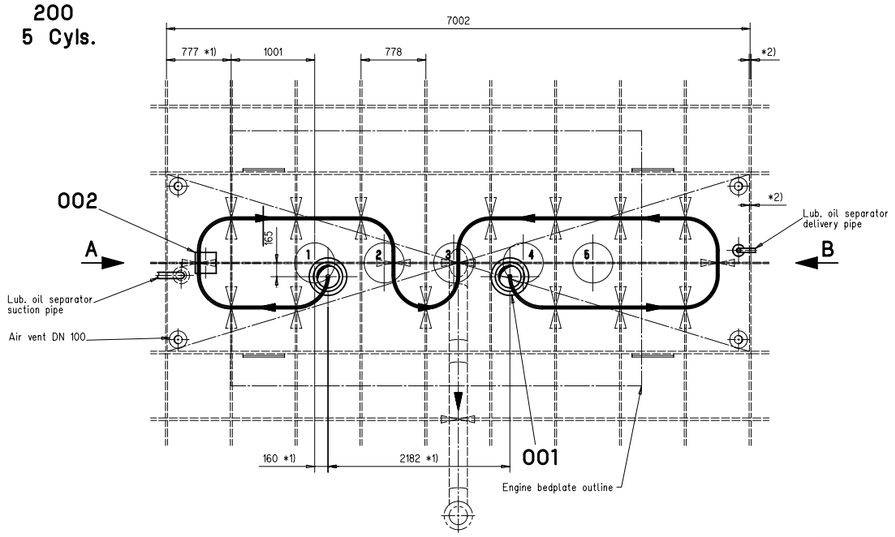

Dimensioning guidelines and capacities for tank design *4)

			No. of cylinders			
			5	6	7	8
h	Total tank height	(mm)	770	770	850	850
	Total tank volume:	(m3)	11.4	12.7	15.4	16.8
h1	Initial filling level	(mm)	670	730	770	810
	volume: 100%	(m3)	10	12	14	16
h2	Service level	(mm)	500	550	580	610
	volume: ≈ 75%	(m3)	7.5	9	10.5	12
h3	Low level alarm	(mm)	440	470	500	530
	volume: ≈ 65%	(m3)	6.5	7.8	9.1	10.4
(d) h4	Pipe immersion height (from lower oil level) min 1.5 x DN					
h5	Distance between suction pipe and bottom of tank = DN/3					
As	Suction Area min. 1.5x suction pipe area (DN)					
Vs	Velocity 2m/s					

Exec. code number 203, 202, 201, 200 — Number of 8Cyl	7Cyl	6Cyl	5Cyl	Pos. code no	Article number / Drawing number	Designation / Material and remarks	Source of supply – mass kg/piece	Modification letter
2	2	2	2	001	107.246.082.200			
					1-107.246.082	ASSEMBLY DRAWING		
						VERTICAL OIL DRAIN		
1	1	1	1	002	107.246.799.200			
					0-107.246.799	TO HYDRAULIC JACK		
						PLATE		

REMARKS:

*1) Proposal, final position to be determined by shipyard in accordance with engine builder (refer to design group 1110).

*2) Plate thickness refer to drawing "Engine foundation" design group 9710.

*3) Dimension according to drawing "lub. oil system" main circuit

*4) The values are based on a required lub. oil capacity of approx. 1.36l/kW at CMCR.

A (Driving end)

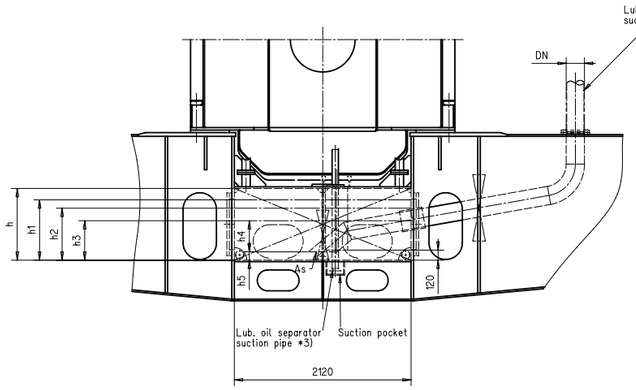

B (Free end)

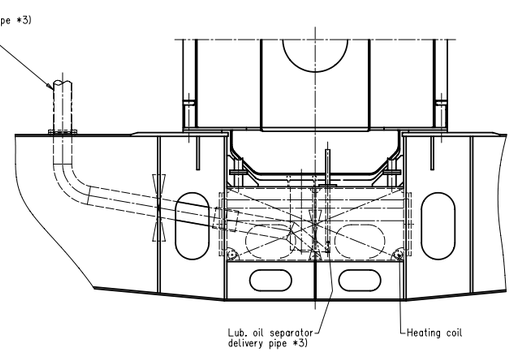

a	7-14.283	20.12.95	c	7-14.447	20.07.99		
b	7-14.446	01.07.99	d	7-14.480	20.11.00		
	Number	Date		Number	Date	Number	Date

Q-Code: X X X X X — Substitute for — Scale 1:25

Engine type: RT48T — Version

Drawn: A. Horsfjord 30.10.95; M. Luethi 29.01.96

Wartsila Switzerland Ltd

LUBRICATING OIL DRAIN TANK
WITH VERTICAL DRAINS

CAD

Design group: 9722 — ISO / JIS

O-107.246.097

Page:

WÄRTSILÄ

SURFACE PROTECTION SEE GROUP 0344

GENERAL TOLERANCES ACCORDING TO ISO/2768-m

This document is the property of Wärtsilä. It may not be copied, lent or disclosed to a third party without the written consent of Wärtsilä. The information contained in this document may not be used for any purpose other than that for which it is lent. Upon request all or part of this document must be returned to Wärtsilä.

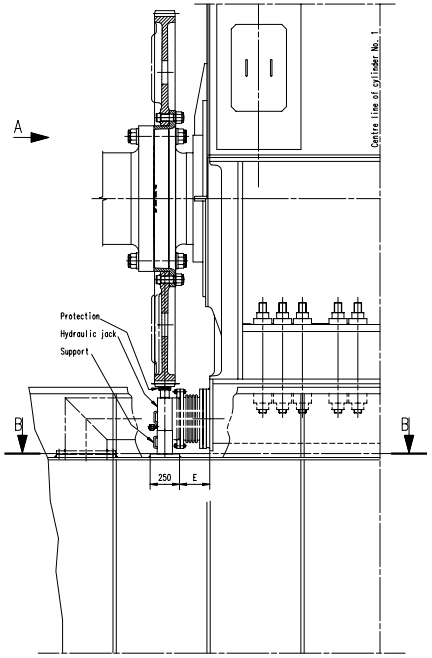

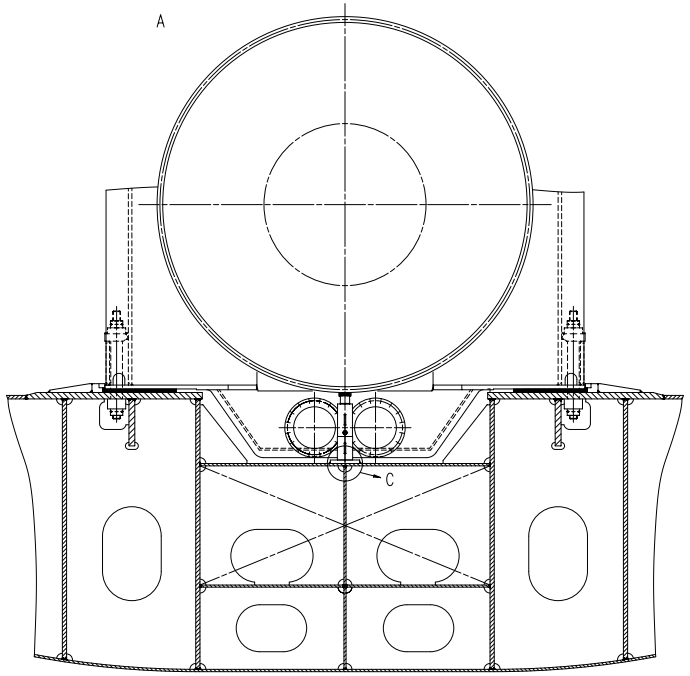

MOTOR TYPE	D	E approx.
RT48T/B/D	1307	196
RT-flex50/B/D/DF	1387	165
RT52U	1690	263
RT58T/B/D/flex	1538	218
RT-flex60C/B	1648	171
RT62U	1970	343
RT62U-B	1590	222
RT68T/B/D/flex	1838	288
RT72U	2262	412
RT72U-B	1832	257
RT82C/flex	2395	460
RT82T/flex	2395	460
RT84C/C-U	2603	501
RT84T/flex	2720	637
RT84T/B/D/flex	2510	590
RT96C/B/D/flex	2510	465
W-X35	1015	124
W-X40	1170	172
Ⓗ W-X52/-X52DF	1630	325
W-X62/-X62DF	1888	343
W-X72/-X72DF	2131	370
W-X82/-X82DF	2395	460
W-X92/-X92DF	2677	334

REMARKS:

*1) Access to the plate has to be kept clear for the hydraulic jack, to lift up the flywheel, during removal of lower main bearing shell.

B–B

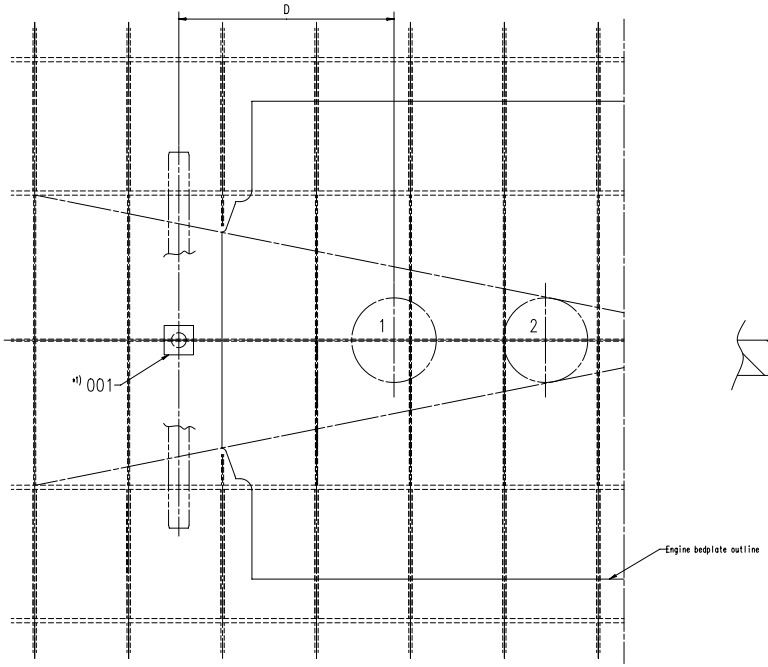

C 1 : 5

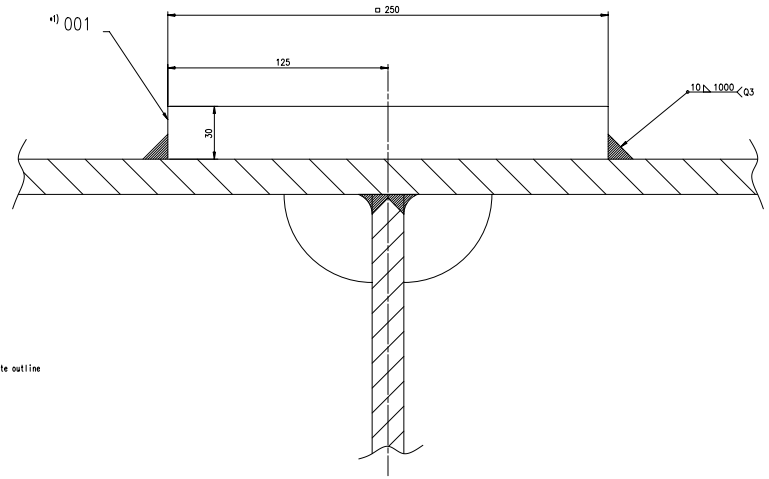

Pos.	Quantity	Part number	Material ID	Material name	Dimension/Sec.Dimension	Standard or Drawing	Basic Material Material Standard	Weight
1	001	107.246.799.001		FLAT BAR		107.246.799		15.0

Net Weight 15.0

Material ID 107.246.799.000 Part name

Shelf	Number	Drawn date	Number	Drawn date	Number	Drawn date	Number	Drawn date
C	EAN0002648	08.02.2011	C EAN0004725	23.07.2013	C EAN0004974	26.11.2013	H EAN0006107	27.08.2015

C-Code XXXXX Standard ISO JIS

WIN GD Winterthur Gas & Diesel

Product W-25

PLATE
TO HYDRAULIC JACK
Blech

Units mm kg 1DE Basic Material Net Weight

SURFACE PROTECTION SEE GROUP 0344
TOLERANCING PRINCIPLE ISO8015
GENERAL TOLERANCES ACCORDING TO ISO2768-mK

Made 09.11.2000 S.Styffansku
Checked
Approved 30.06.2009 mer007 Brabrewa7

Scale 1:14 Design Group 9722
Size A0 Page 1/1 Material
Drawing No. 107.246.799 Rev. H

Copyright Winterthur Gas & Diesel Ltd. All rights reserved. By taking possession of this drawing the recipient recognizes and honours these rights. Neither the whole nor any part of this drawing may be used in any way for construction, fabrication, marketing or any other purpose nor copied in any way nor made accessible to third parties without the previous written consent of Winterthur Gas & Diesel Ltd.

200

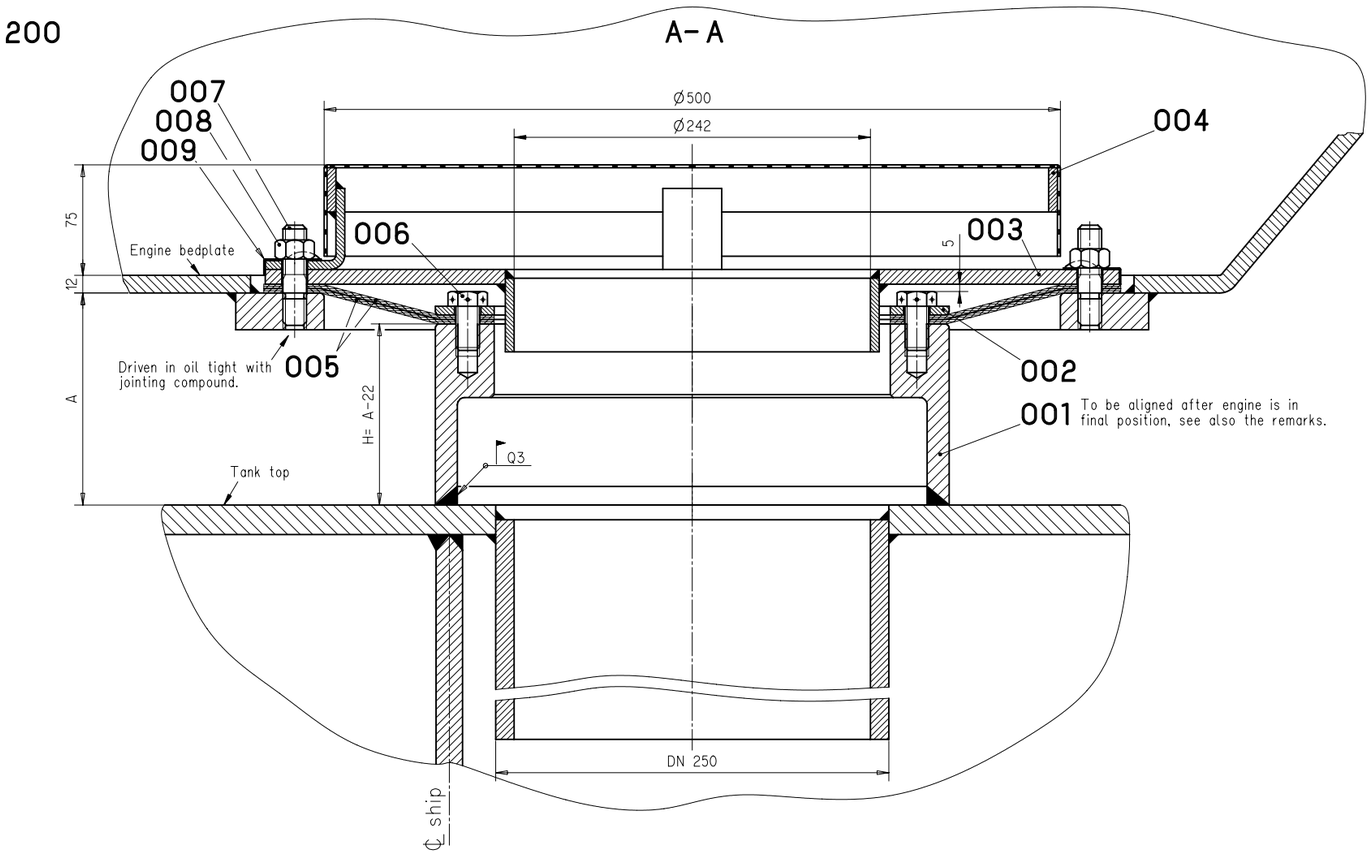

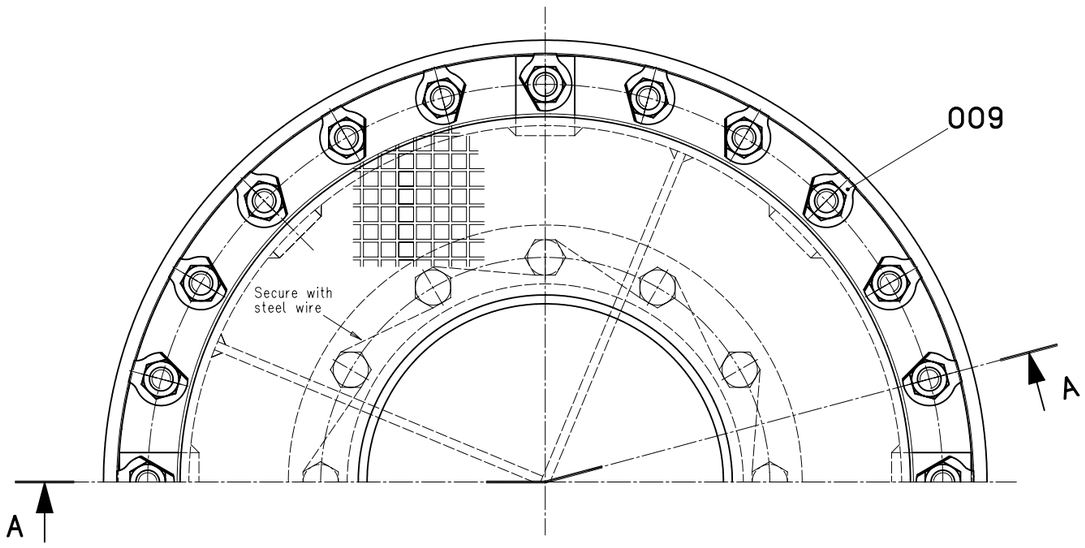

Exec. code number 200	Number of	Pos. code no	Article number / Drawing number	Designation / Material and remarks	Source of supply / ~ mass kg/piece	Modification letter
	1	001	107.246.083.200	Schweissflansch		
			2-107.246.083	St 37-2	20.4	
				WELDING FLANGE		
	1	002	107.246.086.001	Ring		
			2-107.246.086	St 37-2	1.7	
				RING		
	1	003	107.246.087.200	Deckel		
			2-107.246.087	St 37-2	18.1	
				COVER		
	1	004	107.144.369.200	Oelsieb		
			1-107.144.369	St 37-2	6.7	
				OIL STRAINER		
	2	005	107.246.090.000	Gummi Dichtung		
			2-107.246.090	Perbunan 70 Shore Mit Einlage	1	
				RUBBER GASKET		
				REINFORCED		
	12	006	015.151.372.201	6kt.Schraube M16x30		
				8.8 schwarz	0.071	
				HEXAGON HEAD SCREW		
	24	007	015.101.212.351	Stiftschraube M16x68		
				8.8 schwarz	0.14	
				STUD		
	24	008	015.201.012.210	6kt.-Mutter ISO 4032-M16		
				8 schwarz	0.03	
				HEXAGON NUT		
	24	009	015.507.360.810	Sicherungsblech	0.08	
				St-Zn 5B		
				LOCKING PLATE		
	kg 53.8					

REMARKS:

Welding flange, ring and rubber to be pre-assembled prior to alignment. After alignment the flange can be welded in place.

A = Distance between Engine bedplate and Tank top, to be measured after alignment of the Engine.

Items 001 to 009 are yard delivery

SURFACE PROTECTION SEE GROUP 0344

GENERAL TOLERANCES ACCORDING TO ISO/2768-m

Wärtsilä NSD Switzerland Ltd retains all rights to this drawing. By taking part-transfer of the drawing by recipient accepts and honours these rights. Neither the whole nor any part of this drawing may be reproduced, transmitted, made available to third parties or otherwise used without our prior written consent. Infringement of these rights obliges to compensation of damages. Wärtsilä NSD Switzerland Ltd. in case of violation. The recipient will be liable to damages.

Modifications / Free space for lic.

Number	Date	Number	Date	Number	Date	Number	Date
a 14.406	13.08.98						

X X X X X Substitute for

Scale 1:2

Engine type: RT48T, RT48T

Version: B

Design group: 9722

ISO / JIS

VERTICAL OIL DRAIN
ASSEMBLY DRAWING

E 1- 107.246.082

Page:

Drawn: A. Horsfjord 20.10.95

M. Luethi 05.02.96

Wärtsilä NSD Switzerland Ltd

CAD

WÄRTSILÄ NSD

Exec. code number	Pos. code no	Article number / Drawing number	Designation / Material and remarks	Source of supply / ~ mass kg/piece	Modification letter
Number of 1	001	107.246.083.001	Schweissflansch Ø349 x Ø269 x H		
		2-	St.37-2	20.4	
			WELDING FLANGE		

N10 (✓) Kanten gebrochen
SHARP EDGES REMOVED

*For dimension <H> see drawing 1-107.246.082

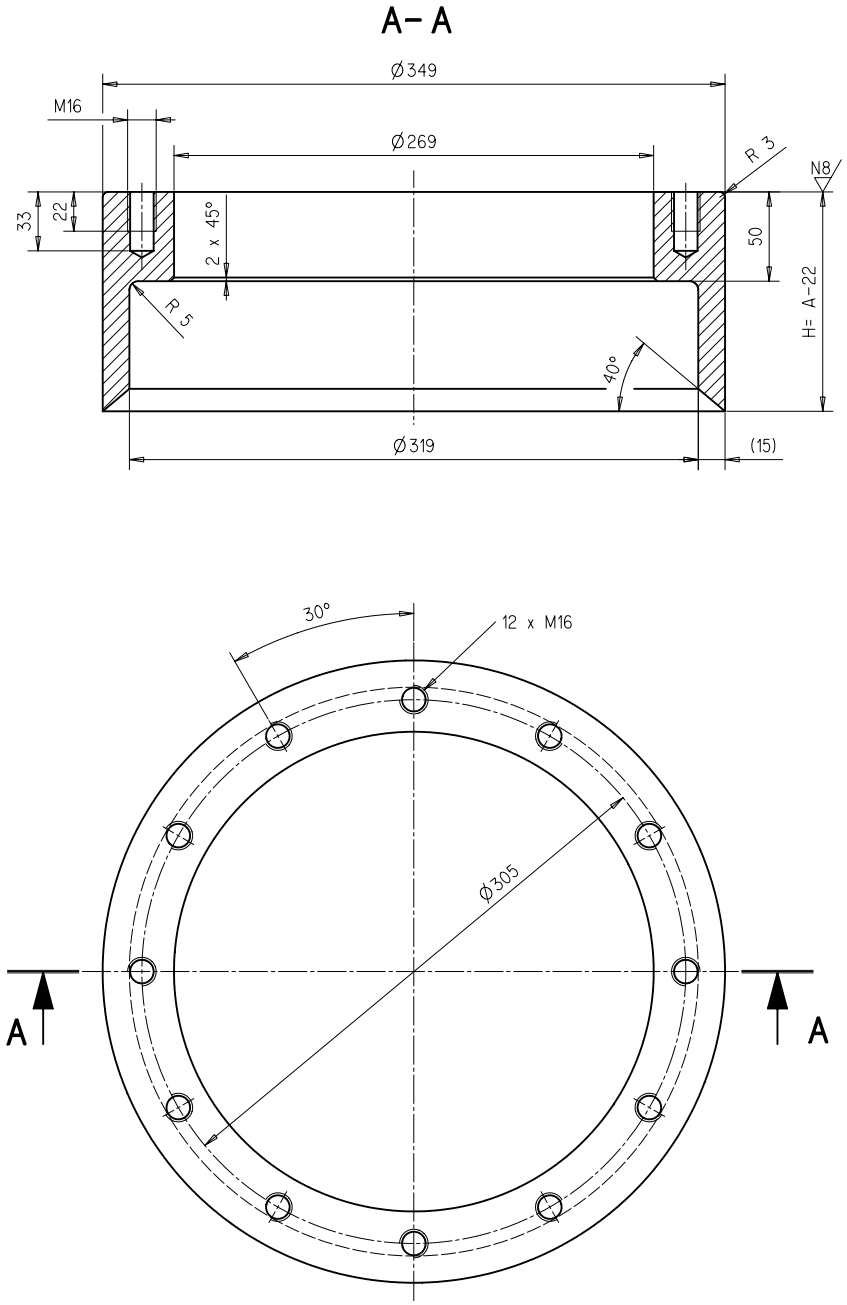

SURFACE PROTECTION SEE GROUP 0344

GENERAL TOLERANCES ACCORDING TO ISO/2768-m

Wärtsilä NSD Switzerland Ltd retains all rights to this drawing. By taking possession of this drawing, the recipient agrees that it will not use it for any purpose other than that for which it was expressly loaned, nor will he make it available to others, nor will he use it in any way for construction, fabrication or marketing or any other purpose nor copied in any way, nor made available to others, directly or indirectly, in whole or in part, without the express written consent of Wärtsilä NSD Switzerland Ltd. In case of violation, the recipient will be liable to damages.

Modifications | Free space for lic.

	Number	Date	Number	Date	Number	Date	Number	Date
a	14.283	20.12.95						
b	14.406	13.08.98						

X X X X X Substitute for

Scale 1 : 2

Engine type: RT48T, RT48T

Version: B

Schweissflansch

WELDING FLANGE

Drawn: A. Horsfjord 25.10.95
M. Luethi 23.02.96

Wärtsilä NSD Switzerland Ltd

CAD

Design group: 9722

ISO / JIS

2-107.246.083

Page: 1

WÄRTSILÄ NSD

Exec. code number	Pos. code no	Article number / Drawing number	Designation / Material and remarks	Source of supply / ~ mass kg/piece	Modification letter
Number of 1	001	107.246.086.001	Ring		
		3-	St.37-2	1.7	
			RING		

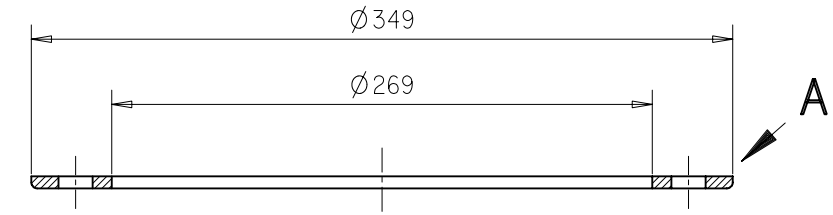

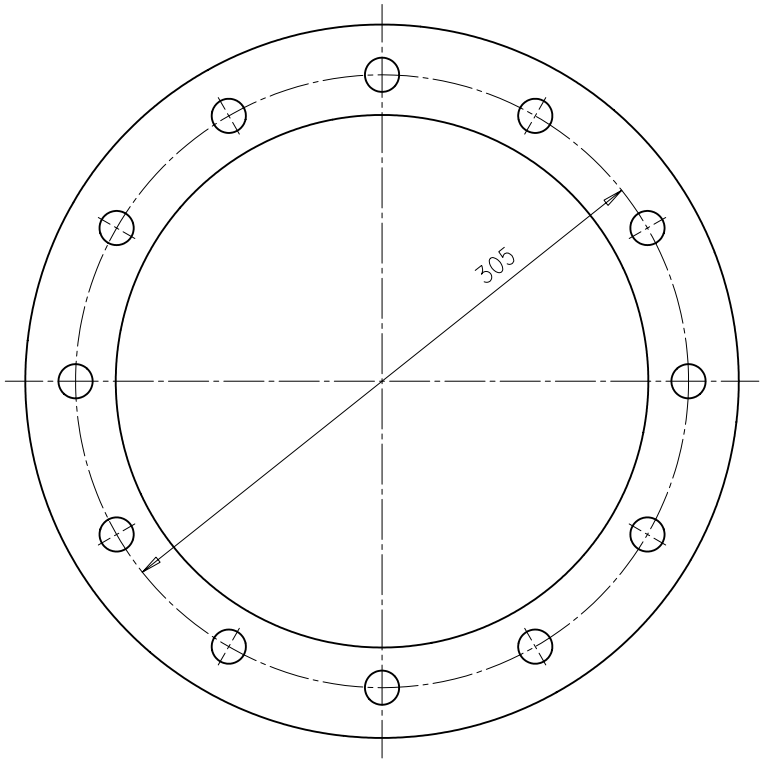

A 1:1

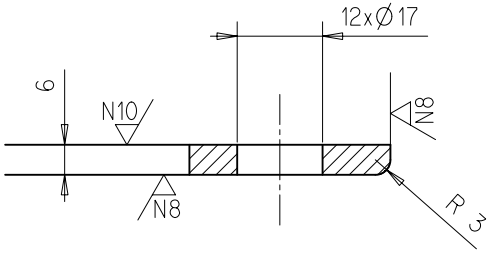

SURFACE PROTECTION SEE GROUP 0344

GENERAL TOLERANCES ACCORDING TO ISO/2768-m

Wärtsilä NSD Switzerland Ltd retains all rights to this drawing. By taking possession of the drawing the recipient recognizes and honours these rights. Neither the whole nor any part of this drawing may be used in any way for construction, fabrication or manufacture or any other purpose nor copied in any way nor made accessible to third parties without the previous written consent of Wärtsilä NSD Switzerland Ltd. In case of violation, the recipient will be liable to damages.

Free space for lic.

Modifications	Number	Date	Number	Date	Number	Date	Number	Date
a	14.283	22.12.95						

~~Ex Code~~ | Substitute for | Scale 1:2.5 ; 1:1

Engine type: RT48T | Version

Ring
zu Oelablauf

RING
TO OIL DRAIN

Drawn: A. Horsfjord 25.10.95
M. Luethi 27.10.95

Wärtsilä NSD Switzerland Ltd

CAD

Design group: 9722

3-107.246.086

Page: 1

WÄRTSILÄ NSD CORPORATION

Exec. code number	Pos. code no	Article number / Drawing number	Designation / Material and remarks	Source of supply / ~ mass kg/piece	Modification letter
200					
Number of 1	001	107.246.088.001	Platte		
		2-	St.37-2	16.3	
			PLATE		
Number of 1	002	107.246.089.001	Ring		
		3-	St. 37-2	1.8	
			RING		

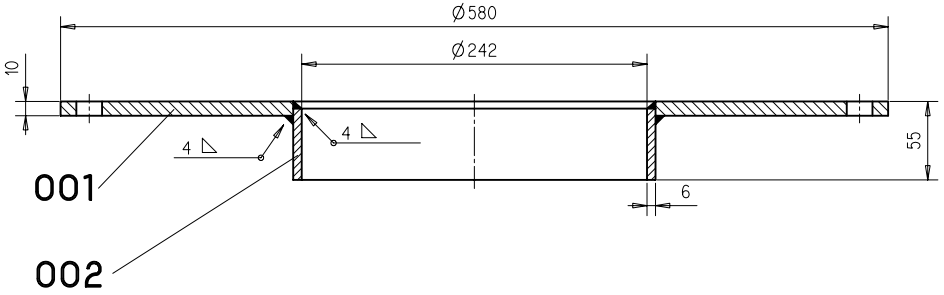

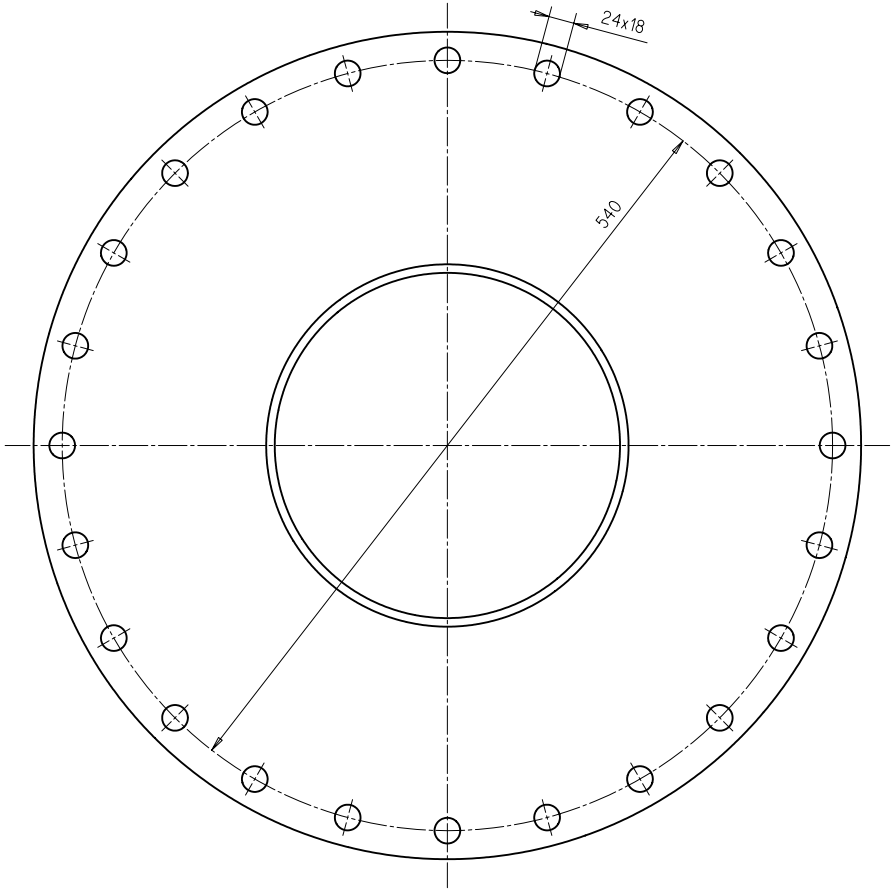

WELD QUALITY CLASS Q3

SURFACE PROTECTION SEE GROUP 0344

GENERAL TOLERANCES ACCORDING TO ISO/2768-m

Wärtsilä NSD Switzerland Ltd retains all rights to this drawing. By taking possession of this drawing, the recipient agrees that it will not reproduce, lend, sell or otherwise make available to third parties the drawing nor any copy thereof nor any information contained therein nor any other information relating to the design, construction, fabrication or marketing or any other purpose nor copied in any way nor made available to third parties without the previous written consent of Wärtsilä NSD Switzerland Ltd. In case of violation, the recipient will be liable to damages.

Modifications	Number	Date	Number	Date	Number	Date	Number	Date
a	14.283	22.12.95						

Free space for lic.

Substitute for

Scale 1 : 2.5

Engine type: RT48T

Version

Design group: 9722

Deckel
zu Oelablauf

COVER
TO OIL DRAIN

2-107.246.087

Page: 1

Drawn: A. Horsfjord 25.10.95
M. Luethi 23.02.96

Wärtsilä NSD Switzerland Ltd

CAD

WÄRTSILÄ NSD

Exec. code number	Pos. code no	Article number / Drawing number	Designation / Material and remarks	Source of supply / ~ mass kg/piece	Modification letter
Number of 1	001	107.246.088.001	Platte		
	2-		St.37-2	16.3	
			PLATE		

A-A

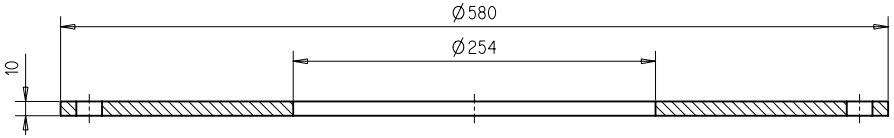

001

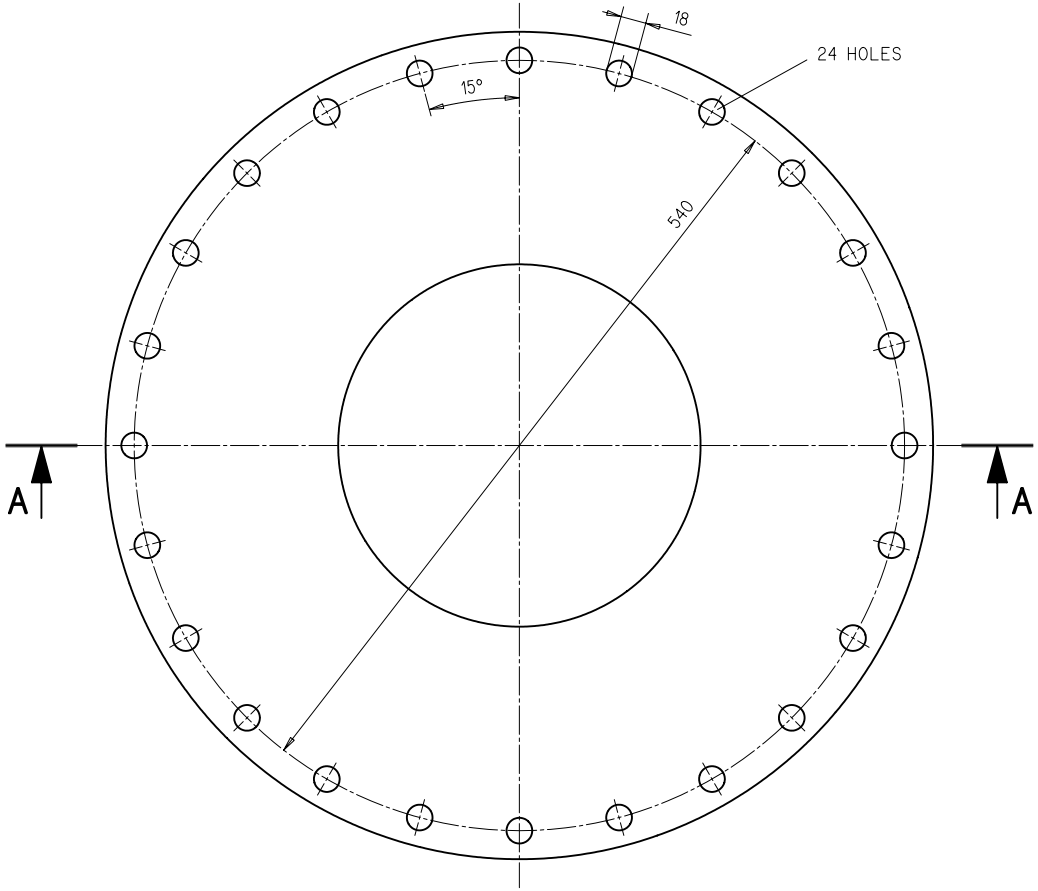

SURFACE PROTECTION SEE GROUP 0344

GENERAL TOLERANCES ACCORDING TO ISO/2768-m

Wärtsilä NSD Switzerland Ltd retains all rights to this drawing. By taking possession of this drawing the recipient agrees that it will not reproduce, lend, sell or otherwise make available to third parties, nor use for construction, fabrication or marketing or any other purpose nor copied in any way, nor made accessible to third parties, directly or indirectly, by means of any medium without the previous written consent of Wärtsilä NSD Switzerland Ltd. In case of violation, the recipient will be liable to damages.

Modifications | Free space for lic.

Number	Date	Number	Date	Number	Date	Number	Date

Substitute for | Scale 1:2.5

Engine type: RTA48T | Version

Drawn: A. Horsfjord 25.10.95

M. Luethi 27.10.95

Wärtsilä NSD Switzerland Ltd

PLATE

CAD

Design group: 9720

E 2-107.246.088

Page:

WÄRTSILÄ NSD

Exec. code number	Pos. code no	Article number / Drawing number	Designation / Material and remarks	Source of supply / ~ mass kg/piece	Modification letter
Number of 1	001	107.246.089.001	Ring		
		3-	St.37-2	1.8	
			RING		

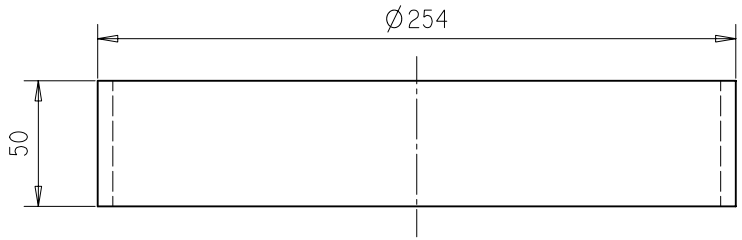

001

WELD QUALITY CLASS Q3

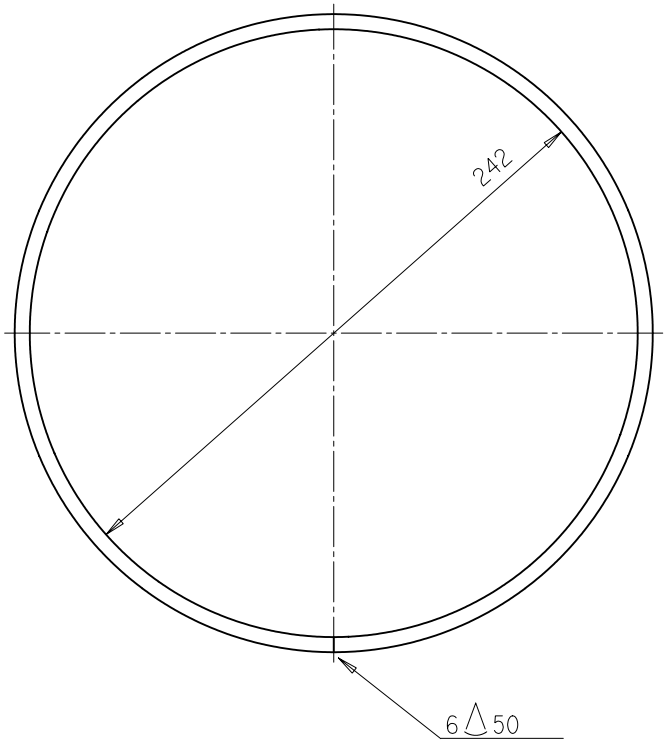

STRAIGHT LENGTH 779

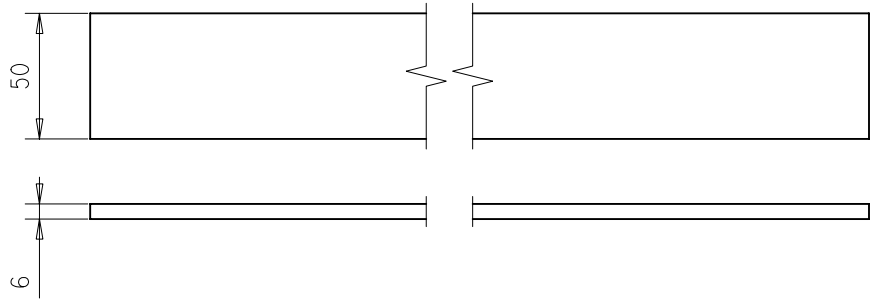

SURFACE PROTECTION SEE GROUP 0344

GENERAL TOLERANCES ACCORDING TO ISO/2768-m

Wärtsilä NSD Switzerland Ltd retains all rights to this drawing. By taking possession of the drawing the recipient recognizes and honours these rights. Neither the whole nor any part of this drawing may be used in any way for construction, fabrication or manufacture or any other purpose nor copied in any way nor made accessible to third parties without the previous written consent of Wärtsilä NSD Switzerland Ltd. In case of violation, the recipient will be liable to damages.

Free space for lic.

Modifications

Number	Date	Number	Date	Number	Date	Number	Date

~~Code~~

Substitute for

Scale 1:2,5

Engine type: RTA48T

Version

Drawn: A. Horsfjord 25.10.95

M. Luethi 27.10.95

Wärtsilä NSD Switzerland Ltd

RING

CAD

Design group: 9720

E 3-107.246.089

Page:

WÄRTSILÄ NSD CORPORATION

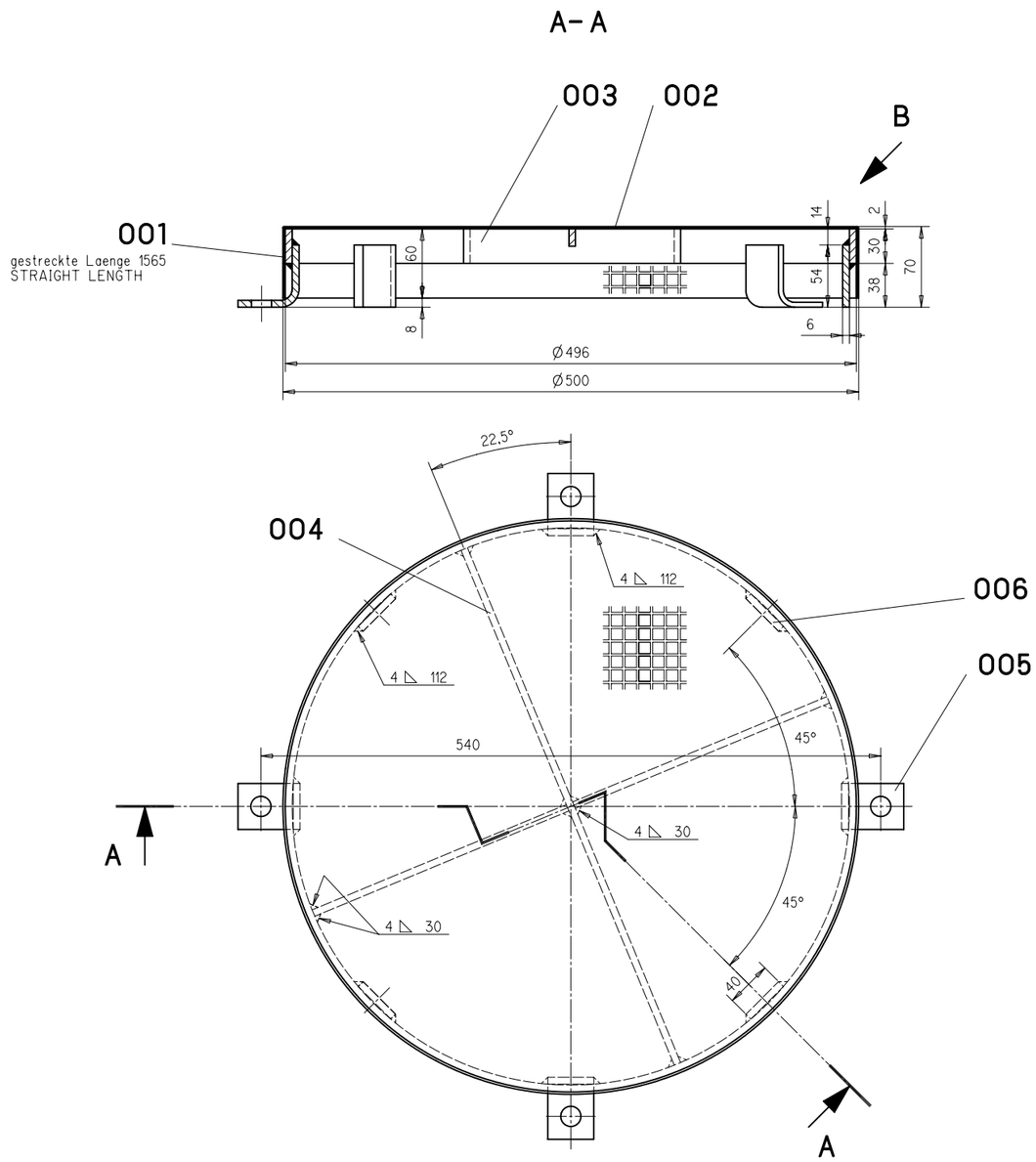

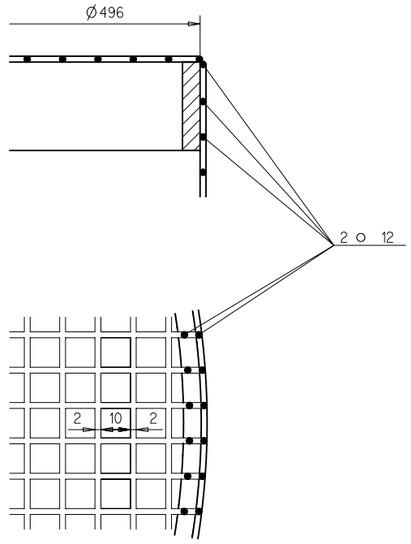

Exec. code number 200	Pos. code no	Article number / Drawing number	Designation / Material and remarks	Source of supply / ~ mass kg/piece	Modification letter
Number of 1	001	107.144.369.001	Gelochtes Blech 60x1565 gestr. Lg.		
		1-	St nicht verzinkt	0.5	
			PERFORATED PLATE		
			NO ZINC PLATED		
1	002	107.144.369.002	Gelochtes Blech Ø496		
		1-	St nicht verzinkt	0.9	
			PERFORATED PLATE		
			NO ZINC PLATED		
1	003	107.128.204.001	Ring		
		3-107.128.204	R St 37-2	2.5	
			RING		
2	004	107.128.205.001	Flachstahl		
		4-107.128.205	R St 37-2	0.68	
			FLAT BAR		
4	005	107.128.206.001	Halter		
		4-107.128.206	R St 37-2	0.18	
			HOLDER		
4	006	107.144.369.006	Flachstahl		
		1-	R St 37-2	0.18	
			FLAT BAR		
kg 6.1					

Qualitaetsstufe Q3
WELD QUALITY CLASS

rohverputzt
ROUGH CLEANED

SURFACE PROTECTION SEE GROUP 0344
GENERAL TOLERANCES ACCORDING TO ISO/2768-m

Wärtsilä NSD Switzerland Ltd retains all rights to this drawing. By taking possession of the drawing, the recipient recognizes and shows respect for the copyright and other property rights of Wärtsilä NSD Switzerland Ltd. Reproduction or disclosure to third parties without express authority is strictly forbidden. In case of violation, the recipient will be liable to damages.

Modifications Free space for inc.

Number	Date	Number	Date	Number	Date	Number	Date

G-Code X X X X X | Substitute for Zchng. gl. Nr. vom 27.10.81 | Scale 1 : 2.5 1:1

Engine type: RT52 | Version

Oelsieb
zum Oelablauf in der Grundplatte

OIL STRAINER
FOR OIL DRAIN IN BEDPLATE

Drawn: M. Winiger 21.03.95

Wärtsilä NSD Switzerland Ltd

CAD

Design group: 1110

1- 107.144.369

Page:

WÄRTSILÄ NSD

Exec. code number	Pos. code no	Article number / Drawing number	Designation / Material and remarks	Source of supply / ~ mass kg/piece	Modification letter
Number of 1	001	107.128.204.001	Ring		
		3-	R St 37-2	2.2	
			RING		

Qualitaetsstufe Q3
WELD QUALITY CLASS

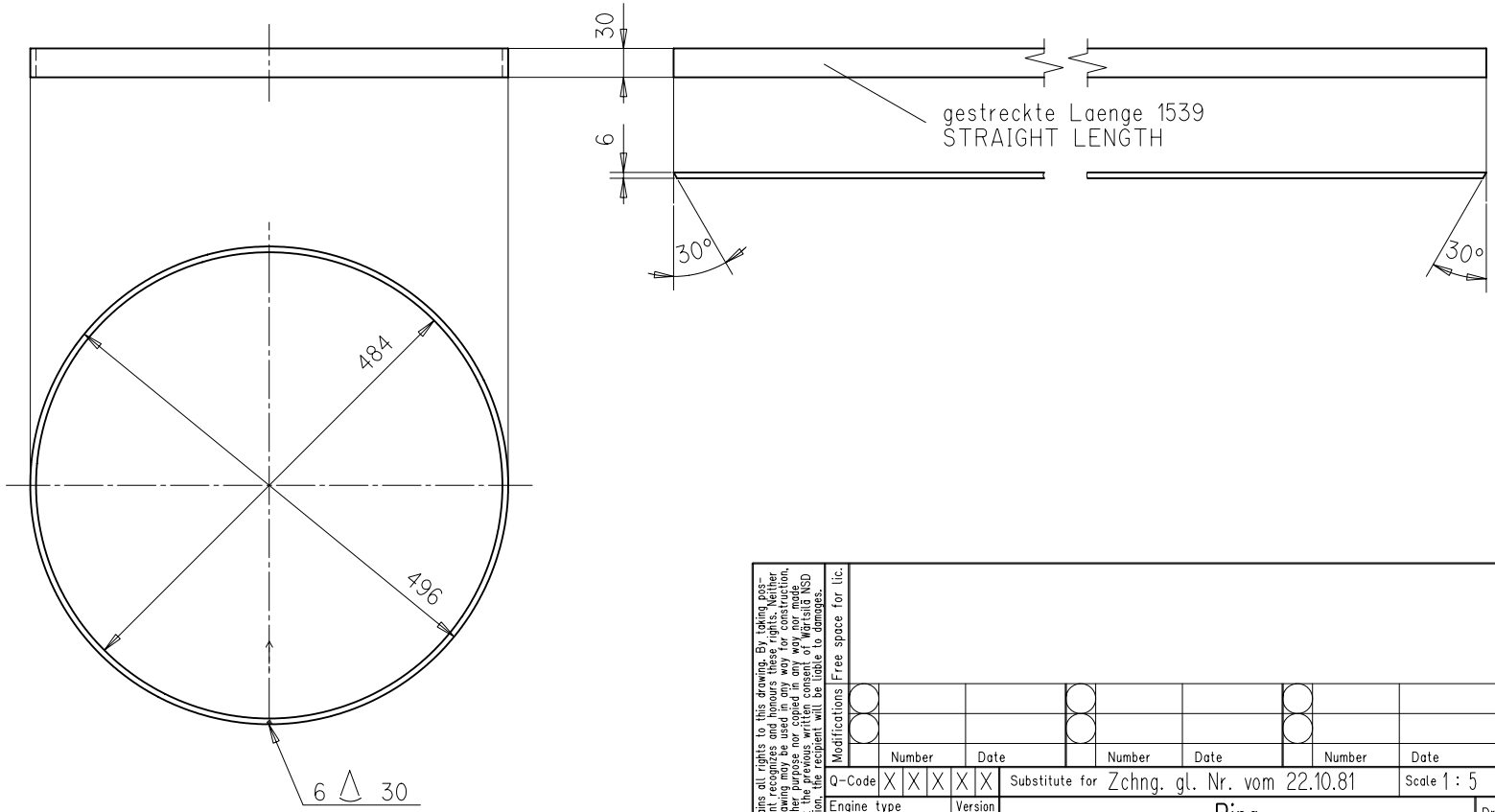

SURFACE PROTECTION SEE GROUP 0344

GENERAL TOLERANCES ACCORDING TO ISO/2768-m

Wärtsilä NSD Switzerland Ltd retains all rights to this drawing. By taking possession of the drawing the recipient recognizes and honours these rights. Neither the whole nor any part of this drawing may be used in any way for construction, fabrication or production or any other purpose nor copied in any way nor made accessible to third parties without the previous written consent of Wärtsilä NSD Switzerland Ltd. In case of violation, the recipient will be liable to damages.

Free space for lic.

Modifications	Number	Date	Number	Date	Number	Date	Number	Date

Q-Code X X X X X — Substitute for Zchng. gl. Nr. vom 22.10.81 — Scale 1 : 5

Engine type: RT52 — Version

Ring
zum Rahmen des Oelsiebes

RING
ON FRAME FOR OIL STRAINER

Drawn: M. Winiger 20.03.95

Wärtsilä NSD Switzerland Ltd

CAD

Design group: 1110

3-107.128.204

Page:

WÄRTSILÄ NSD CORPORATION

SURFACE PROTECTION SEE GROUP 0344

GENERAL TOLERANCES ACCORDING TO ISO/2768-m

Exec. code no	Pos. code no		Article number	Designation	Source of supply	Modification letter
Number of 1			Drawing number	Material and remarks	~ mass kg/piece	
	001		107.128.205.001	Flachstahl		
		4-		R St 37-2	0.68	
				FLAT BAR		

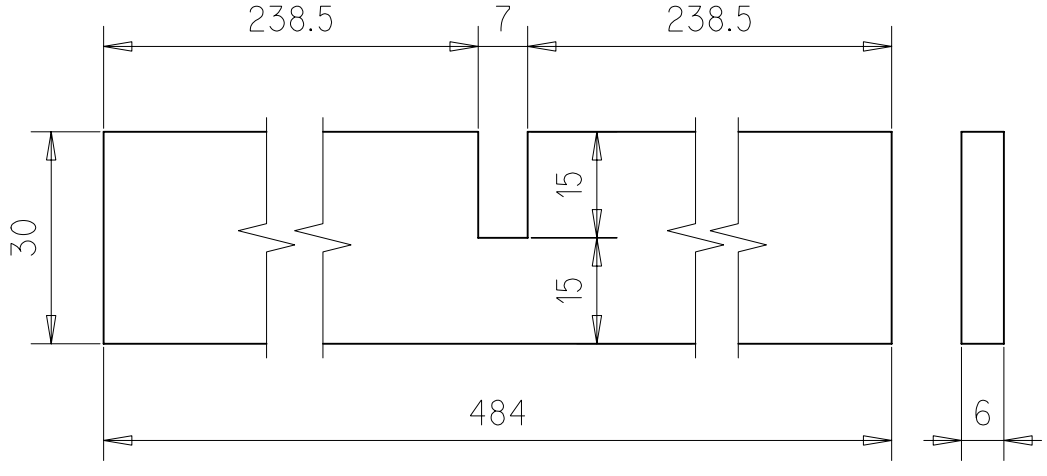

Wärtsilä NSD Switzerland Ltd retains all rights to this drawing. By taking possession of the drawing the recipient recognizes and honours these rights. Neither the whole nor any part of this drawing may be used in any way for construction, fabrication or marketing or any other purpose nor copied in any way nor made accessible to third parties without the previous written consent of Wärtsilä NSD Switzerland Ltd. In case of violation, the recipient will be liable to damages.

Free space for lic.

Modifications

Number	Date	Number	Date	Number	Date	Number	Date

Q-Code X X X X X

Substitute for Zchng. gl. Nr. vom 22.10.81

Scale 1 : 1

Engine type: RT52

Version:

Flachstahl
zum Rahmen des Oelsiebes

FLAT BAR
ON FRAME FOR OIL STRAINER

Drawn: M. Winiger 20.03.95

Wärtsilä NSD Switzerland Ltd

CAD

WÄRTSILÄ NSD CORPORATION

Design group: 1110

4-107.128.205

Page:

SURFACE PROTECTION SEE GROUP 0344

GENERAL TOLERANCES ACCORDING TO ISO/2768-m

Exec. code no	Pos. code no		Article number	Designation	Source of supply	Modification letter
Number of 1			Drawing number	Material and remarks	~ mass kg/piece	
	001		107.128.206.001	Halter		
		4-		R St 37-2	0.18	
				HOLDER		

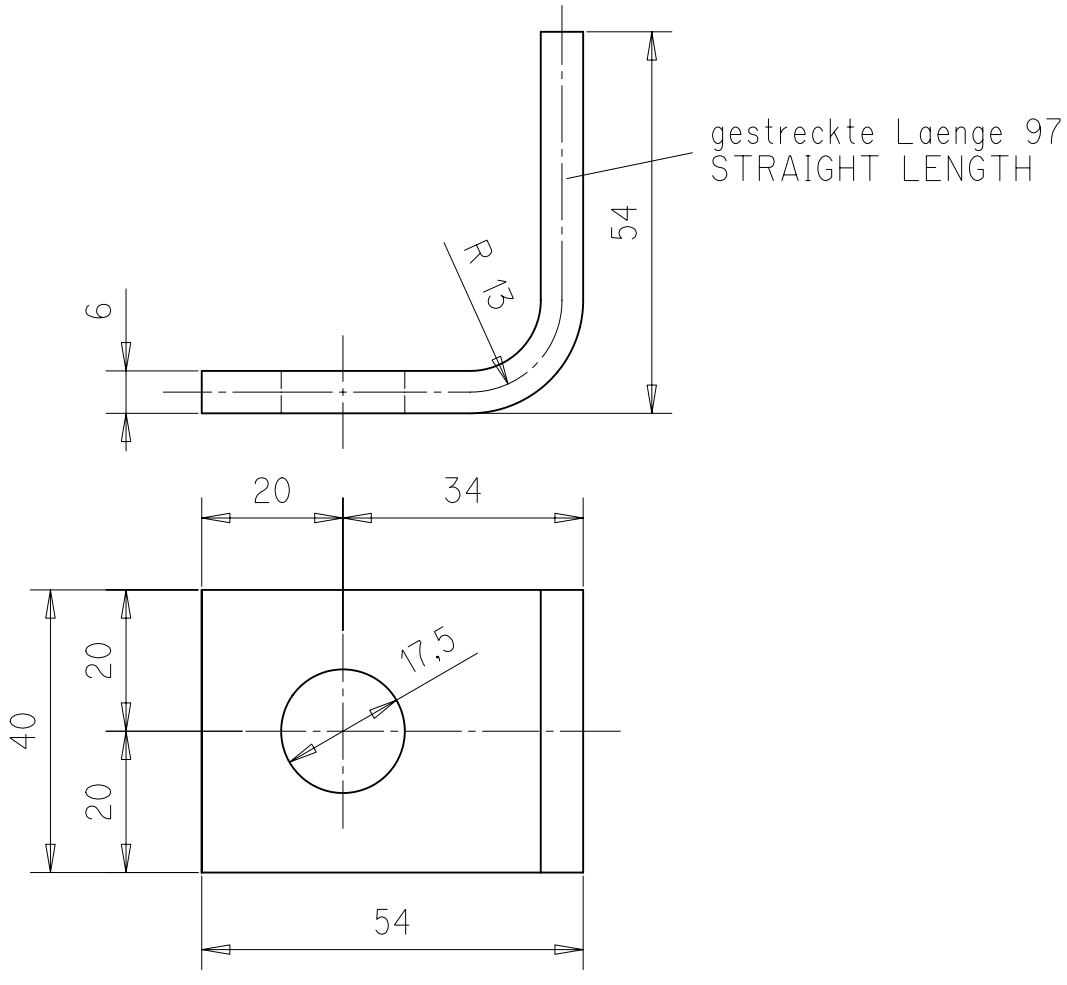

Wärtsilä NSD Switzerland Ltd retains all rights to this drawing. By taking possession of the drawing the recipient recognizes and honours these rights. Neither the whole nor any part of this drawing may be used in any way for construction, fabrication or marketing or any other purpose nor copied in any way nor made accessible to third parties without the previous written consent of Wärtsilä NSD Switzerland Ltd. In case of violation, the recipient will be liable to damages.

Free space for lic.

Modifications

Number	Date	Number	Date	Number	Date	Number	Date

Q-Code X X X X X

Substitute for Zchng. gl. Nr. vom 22.10.81

Scale 1 : 1

Engine type RT52

Version

Halter

zum Rahmen des Oelsiebes

Drawn: M. Winiger 20.03.95

HOLDER

ON FRAME FOR OIL STRAINER

Wärtsilä NSD Switzerland Ltd

CAD

Design group 1110

4-107.128.206

Page:

WÄRTSILÄ NSD CORPORATION

Exec. code number	Pos. code no	Article number / Drawing number	Designation / Material and remarks	Source of supply / ~ mass kg/piece	Modification letter
Number of 1	001	107.246.090.001	Gummi Dichtung		
	2-		Perbunan 70 Shore Mit Einlage	1	
			RUBBER GASKET		
			REINFORCED		

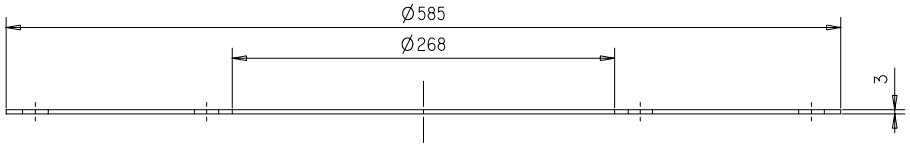

001

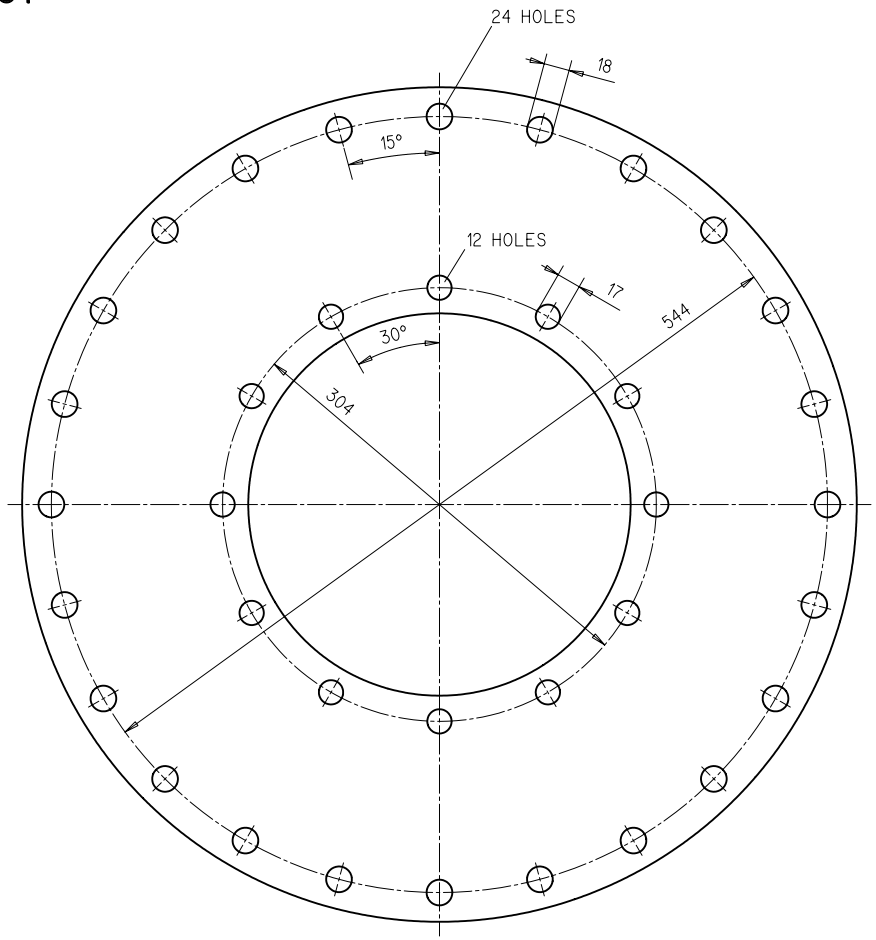

SURFACE PROTECTION SEE GROUP 0344

GENERAL TOLERANCES ACCORDING TO ISO/2768-m

Wärtsilä NSD Switzerland Ltd retains all rights to this drawing. By taking possession of this drawing the recipient undertakes not to make, have made or offer for sale any copies of this drawing nor to use it in any way for construction, fabrication or marketing or any other purpose nor copied in any way nor made available to third parties without the previous written consent of Wärtsilä NSD Switzerland Ltd. In case of violation, the recipient will be liable to damages.

Modifications: Free space for lic.

Number	Date	Number	Date	Number	Date	Number	Date
a 14.283	22.12.96						

Substitute for

Scale 1 :2.5

Engine type: RT48T

Version

Design group: 9722

Gummidichtung
zu Oelablauf

RUBBER GASKET
TO OIL DRAIN

2-107.246.090

Page: 1

Drawn: A. Horsfjord 25.10.95
M. Luethi 22.02.96

Wärtsilä NSD Switzerland Ltd

CAD

WÄRTSILÄ NSD

Specifications that need to be met:

RT-flex48T-D

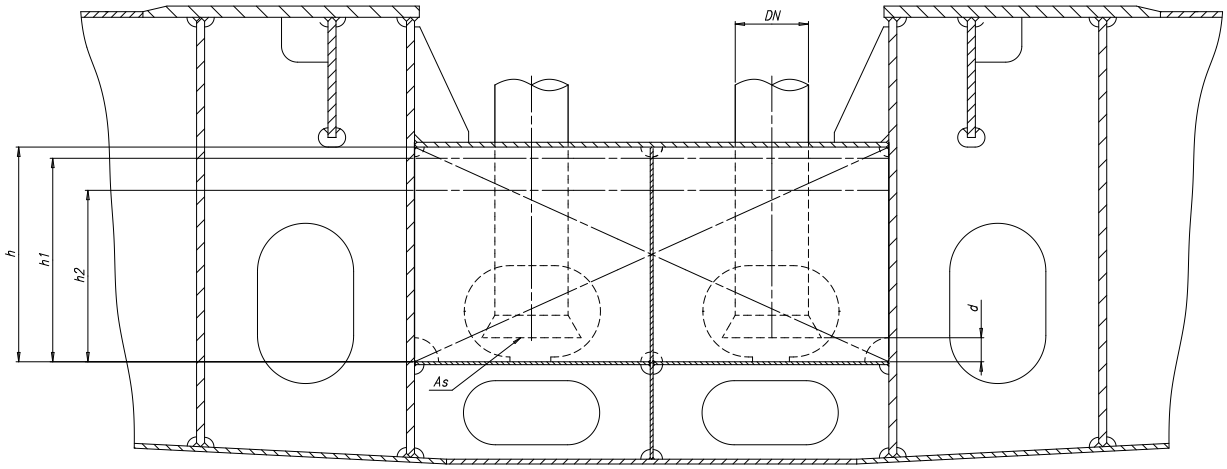

Dimensioning guidelines and capacities for tank design

		No. of cylinders		5	6	7	8
(B)	h	Recommended total tank height	(mm)	acc. to installation requirements			
		Recommended total tank volume: 105% *5)	(m3)	8	9	10	11
(B)	h1	Recommended filling level	(mm)	acc. to installation requirements			
		Recommended volume: 100% *5)	(m3)	8	9	10	11
	h2	Low-level alarm	(mm)	*2)			
		Volume	(m3)				
(B)	Vr	Min. retention volume *3)	(m3)	6	6	7	8
	d	Distance between suction pipe and bottom of tank	(mm)	*4)			
	As	Suction area	(m2)	min. 1.5 x suction pipe area (DN)			

REMARKS:

*1) Level after filling of external system. Volume and level in the LO drain tank depend on capacity of pipes, coolers, filters, etc. The oil volume in tank contains a part of the oil quantity, which drains back when the pumps are stopped.

*2) The low-level alarm (h2) has to be positioned in such a way that a proper pump suction is ensured under the conditions defined by the classification societies.

Minimum inclination angles comply with the rules of classification societies:

Heel to each side	15°
Rolling to each side	±22.5°
Trim	500/L, max. 5° L: ship length in meter Example L = 250 m Trim = 500/250 = 2°
Pitching	± 7.5°

Additionally this level has to be above or equal to the minimum retention volume (Vr) for M/E operation.

*3) To be maintained during engine operation (LO pump suction without LO drain back-flow (emergency case) is ensured for at least 3 minutes).

*4) Distance (d) between suction pipe inlet of main LO pumps and LO drain tank bottom has to be in accordance with the requirements of the pump manufacturer. As guideline the following formula can be applied: d = DN/4 + 40, d = min. 80 mm.

(B) *5) The stated tank volume represent the min. requirement. Final tank dimensions have to be aligned in regard to dimensional restricions by ship and engine structure and the pump suction requirement.

LO DRAIN TANK - FILLING PROCESS

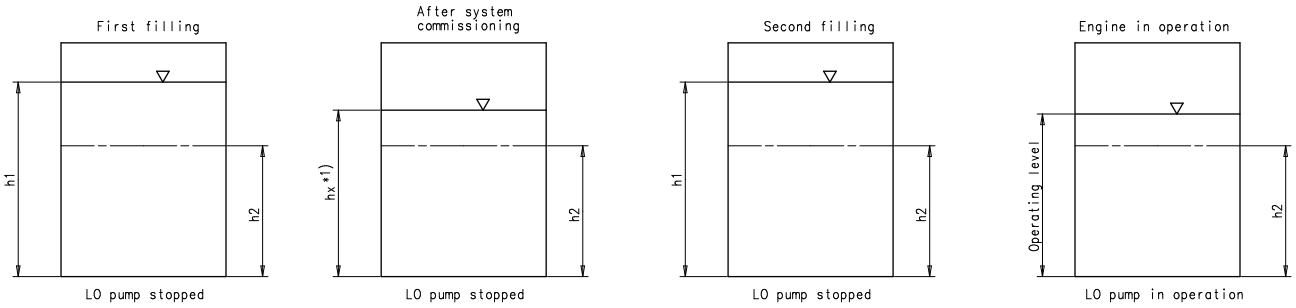

Free space for i.c.										O-Code XXXXX	Main Dra.
										Standard ISO JIS	
Mod I	-	EAAD082835	07.04.2011	A	EAAD086020	15.07.2015	B	EAAD086531	25.03.2016		
		Number	Drawn date		Number	Drawn date		Number	Drawn date	Number	Drawn date

WIN GD Winterthur Gas & Diesel

Product W-48

LUBRICATING OIL DRAIN TANK
FILLING GUIDELINE

Units mm kg | IDE | Basic Material | Net Weight 0.001

SURFACE PROTECTION SEE GROUP 0344	Mode	08.04.2011 mhu019 M.Hug	Scale 1:25	Size A1	Page 1/1	Material ID PAAD039570	
TOLERANCING PRINCIPLE ISO8015	Chkd	02.05.2011 sfe006 Feuerstein	Design Group 9722				
GENERAL TOLERANCES ACCORDING TO ISO2768-mK	Appd	03.05.2011 dst009 Strödecke		Drawing ID DAAD016269			Rev. B

Approved

RG - PRODUCTION DRAWING - Confidential

Copyright Winterthur Gas & Diesel Ltd. All rights reserved. By taking possession of the drawing the recipient recognizes and honours these rights. Neither the whole nor any part of this drawing may be used in any way for construction, fabrication, marketing or any other purpose nor copied in any way nor made accessible to third parties without the previous written consent of Winterthur Gas & Diesel Ltd.

Pos.	Description
001	ABB-Turbocharger
002	Lubricating oil drain tank
003	Heating coil
004	Suction filter
005	Lubricating oil pump
006	Lubricating oil cooler
007	Automatic temperature control valve
008	Lubricating oil filter
009	Pressure regulating valve
(I)	Lubricating oil inlet *5)
(II)	Lubricating oil outlet *5)
(III)	Air vent *5)

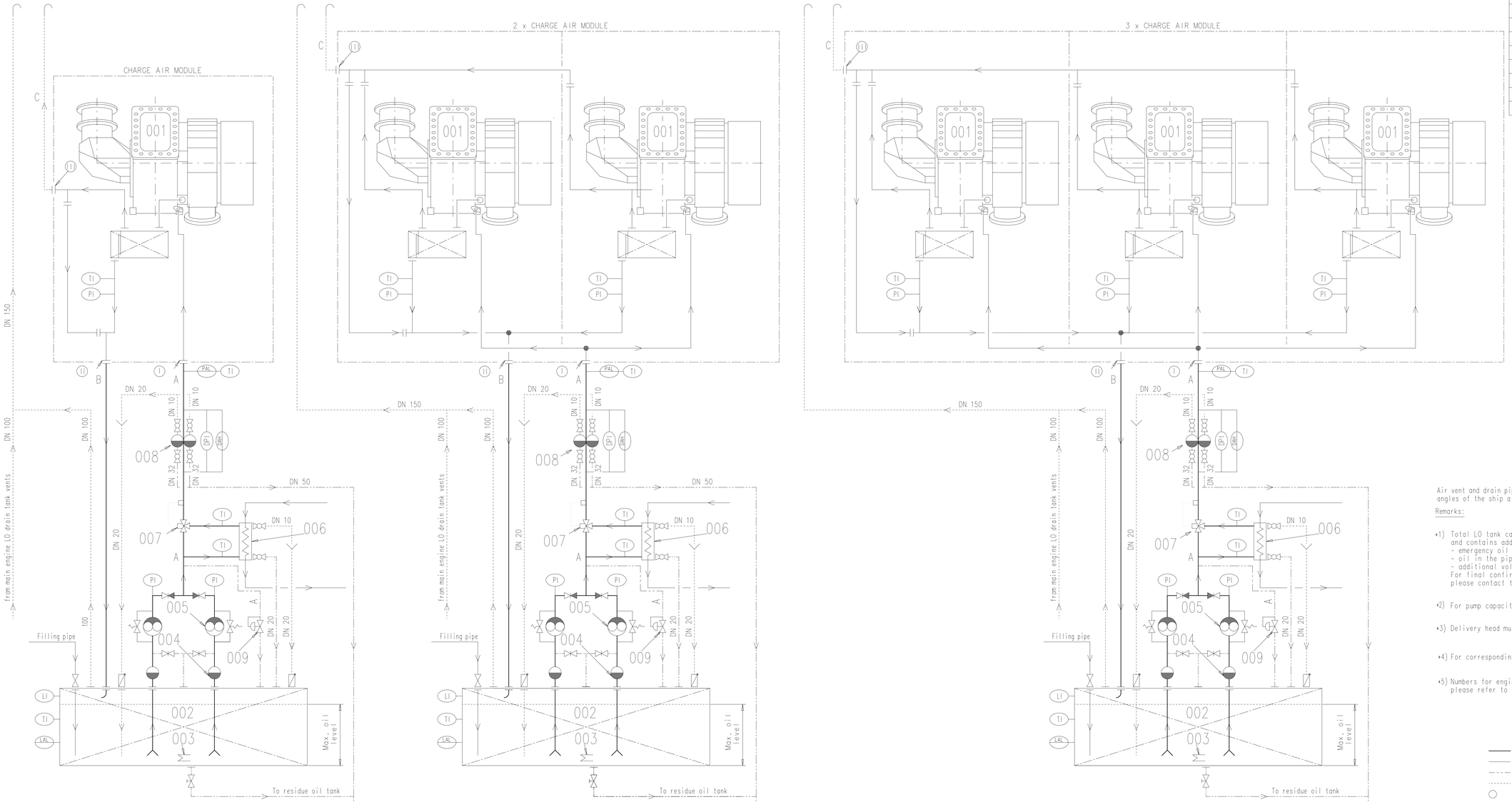

Air vent and drain pipes must be fully functional at all inclination angles of the ship at which the engine must be operational.

Remarks:

*1) Total LO tank capacity is higher than min. residual volume and contains additional volumes:
- emergency oil in the integrated head tank
- oil in the pipeline which drains back, when pump is stopped
- additional volume for air
For final confirmation of total capacity, please contact the turbocharger manufacturer.

*2) For pump capacity, temperature and oil viscosity, please refer to the GTD program.

*3) Delivery head must be according to the actual piping layout.

*4) For corresponding data, please refer to manufacturer of turbocharger.

*5) Numbers for engine pipe connections, please refer to the pipe connection plan for specific engine.

- Bearing LO pipes
- Transfer/dirty LO pipes
- Overflow/drain pipes
- Air vent pipes
- Pipe connections
- Pipes on engine

1 SET OF TURBOCHARGER			A165-L A265-L	A170-L A270-L	A175-L A275-L	A180-L A280-L	A185-L A285-L	A190-L
LO tank	min. residual capacity	m^3	*4)					
	total capacity	m^3	*1)					
LO pump *2)	capacity	m^3/h	Refer to GTD					
	capacity	l/min						
	*3) delivery	bar	4,0					
	min. pre-lubrication time	min	5,0					
	min. post-lubrication time	min	10,0					
Blow-By	capacity	m^3/h	*4)					
	capacity	l/min						
Nominal pipe diameter	A	DN	32	32	32	40	40	40
		dia mm	ø42,4x2,6	ø42,4x2,6	ø42,4x2,6	ø48,3x2,6	ø48,3x2,6	ø48,3x2,6
	B	DN	65	65	65	80	80	80
		dia mm	ø76,1x2,9	ø76,1x2,9	ø76,1x2,9	ø88,9x3,2	ø88,9x3,2	ø88,9x3,2
	C	DN	65	65	65	80	80	80
		dia mm	ø76,1x2,9	ø76,1x2,9	ø76,1x2,9	ø88,9x3,2	ø88,9x3,2	ø88,9x3,2

2 SETS OF TURBOCHARGER			A165-L A265-L	A170-L A270-L	A175-L A275-L	A180-L A280-L	A185-L A285-L	A190-L
LO tank	min. residual capacity	m^3	*4)					
	total capacity	m^3	*1)					
LO pump *2)	capacity	m^3/h	Refer to GTD					
	capacity	l/min						
	*3) delivery	bar	4,0					
	min. pre-lubrication time	min	5,0					
	min. post-lubrication time	min	10,0					
Blow-By	capacity	m^3/h	*4)					
	capacity	l/min						
Nominal pipe diameter	A	DN	40	50	50	50	65	65
		dia mm	ø48,3x2,6	ø60,3x2,9	ø60,3x2,9	ø60,3x2,9	ø76,1x2,9	ø76,1x2,9
	B	DN	80	100	100	100	125	125
		dia mm	ø88,9x3,2	ø114,3x3,6	ø114,3x3,6	ø114,3x3,6	ø139,7x4	ø139,7x4
	C	DN	80	100	100	100	125	125
		dia mm	ø88,9x3,2	ø114,3x3,6	ø114,3x3,6	ø114,3x3,6	ø139,7x4	ø139,7x4

3 SETS OF TURBOCHARGER			A180-L A280-L	A185-L A285-L	A190-L
LO tank	min. residual capacity	m^3	*4)		
	total capacity	m^3	*1)		
LO pump *2)	capacity	m^3/h	Refer to GTD		
	capacity	l/min			
	*3) delivery	bar	4,0		
	min. pre-lubrication time	min	5,0		
	min. post-lubrication time	min	10,0		
Blow-By	capacity	m^3/h	*4)		
	capacity	l/min			
Nominal pipe diameter	A	DN	65	65	80
		dia mm	ø76,1x2,9	ø76,1x2,9	ø88,9x3,2
	B	DN	125	150	150
		dia mm	ø139,7x4	ø168,3x4,5	ø168,3x4,5
	C	DN	125	150	150
		dia mm	ø139,7x4	ø168,3x4,5	ø168,3x4,5

Free edges for fit

Q-Code: XXXXX
Standard: ISO; JIS
Main Drw.

Weld | Number | Drawn date | Number | Drawn date | Number | Drawn date | Number | Drawn date

WIN GD Winterthur Gas & Diesel

Product: W-2S

LUBRICATING OIL SYSTEM
Separated TC lubricating
Schmieroelsystem

Units: mm kg | NX | Basic Material | Net Weight 0,001

SURFACE PROTECTION SEE GROUP 0344	Made	05.12.2016 dki021 DH Kim	Scale -	Size A0	Page 1/3
TOLERANCING PRINCIPLE ISO8015	Chkd	16.12.2016 wwa008 Wang	Design Group 9722	Material ID PAAD245338	
GENERAL TOLERANCES ACCORDING TO ISO2768-mK	Appd	16.12.2016 bha009 Haag		Drawing ID DAAD083642	Rev. -

Approved

Copyright Winterthur Gas & Diesel Ltd. All rights reserved. By taking possession of the drawing, the recipient recognizes and honours these rights. Neither the whole nor any part of this drawing may be used in any way for construction, fabrication, marketing or any other purpose nor copied in any way nor made accessible to third parties without the previous written consent of Winterthur Gas & Diesel Ltd.

Pos.	Description
001	MHI-Turbocharger (MET-MA)
002	Lubricating oil drain tank
003	Heating coil
004	Suction filter
005	Lubricating oil pump
006	Lubricating oil cooler
007	Automatic temperature control valve
008	Lubricating oil filter
009	Pressure regulating valve
(I)	Lubricating oil inlet *5)
(II)	Lubricating oil outlet *5)
(ii)	Air vent *5)

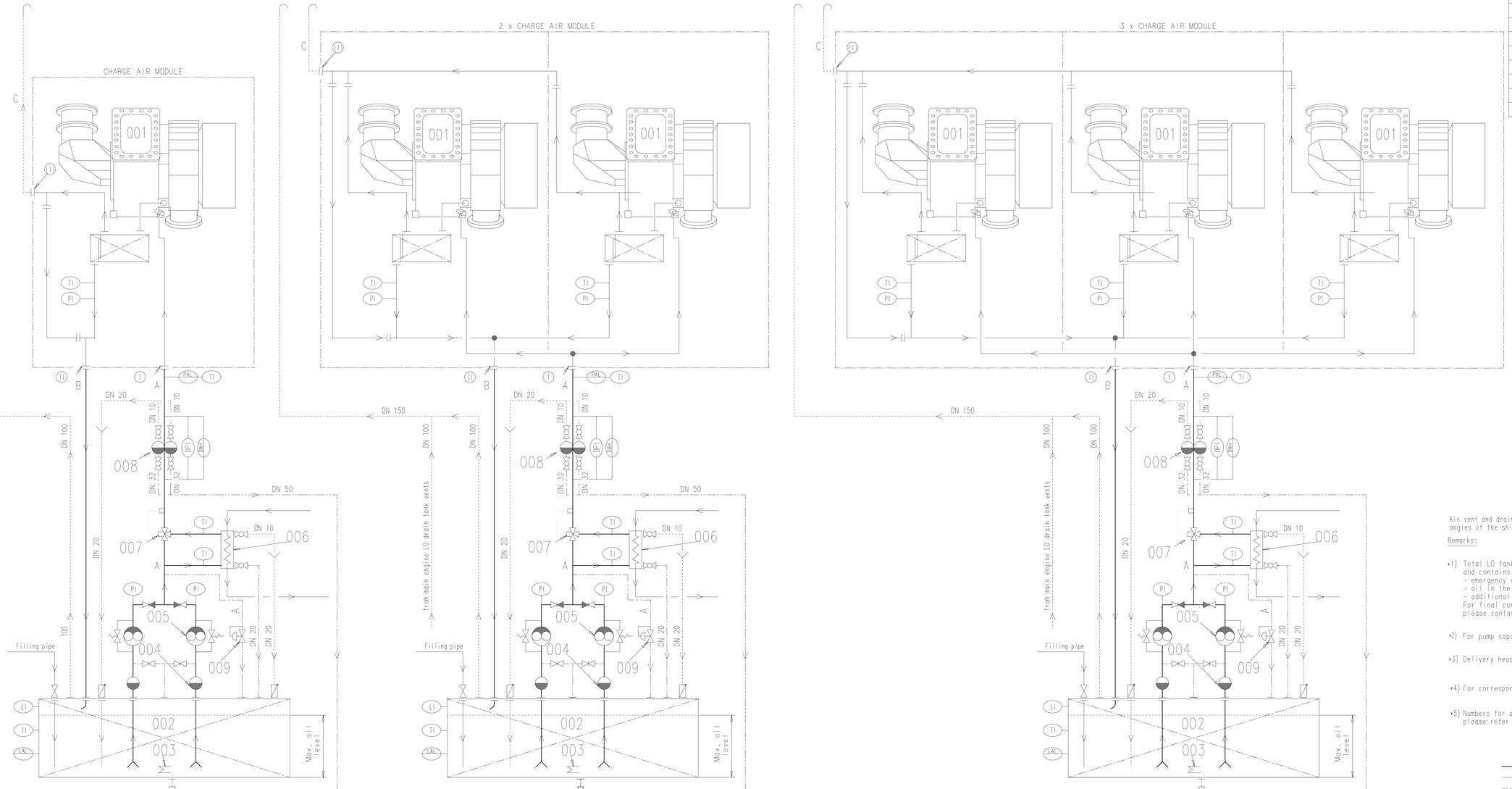

Air vent and drain pipes must be fully functional at all inclination angles of the ship at which the engine must be operational.

Remarks:

*1) Total LO tank capacity is higher than min. residual volume and contains additional volumes:
- emergency oil in the integrated head tank
- oil in the pipeline which drains back, when pump is stopped
- additional volume for air
For final confirmation of total capacity, please contact the turbocharger manufacturer.

*2) For pump capacity, temperature and oil viscosity, please refer to the GTD program.

*3) Delivery head must be according to the actual piping layout.

*4) For corresponding data, please refer to manufacturer of turbocharger.

*5) Numbers for engine pipe connections, please refer to the pipe connection plan for specific engine.

Bearing LO pipes
Transfer/dirty LO pipes
Overflow/drain pipes
Air vent pipes
Pipe connections
Pipes on engine

1 SET OF TURBOCHARGER			MET33MA	MET42MA	MET53MA	MET60MA	MET66MA	MET71MA	MET83MA	MET90MA
LO tank	min. residual capacity	m^3	0.18	0.27	0.43	0.53	0.67	0.88	1.07	1.30
	total capacity	m^3	*1)							
LO pump *2)	capacity	m^3/h	Refer to GTD							
	capacity	l/min								
	*3) delivery	bar	4.0							
	min. pre-lubrication time	min	-							
	min. post-lubrication time	min	30							
Blow-By	capacity	m^3/h	*4)							
	capacity	l/min								
Nominal pipe diameter	A	DN	25	32	40	50	50	50	50	65
		dia mm	ø 33.7x2.6	ø 42.4x2.6	ø 48.3x2.6	ø 60.3x2.9	ø 60.3x2.9	ø 60.3x2.9	ø 60.3x2.9	ø 76.1x2.9
	B	DN	65	80	100	100	100	125	125	125
		dia mm	ø 76.1x2.9	ø 88.9x3.2	ø 114.3x3.6	ø 114.3x3.6	ø 114.3x3.6	ø 139.7x4	ø 139.7x4	ø 139.7x4
	C	DN	40	50	65	80	80	80	100	100
		dia mm	ø 48.3x2.6	ø 60.3x2.9	ø 76.1x2.9	ø 88.9x3.2	ø 88.9x3.2	ø 88.9x3.2	ø 114.3x3.6	ø 114.3x3.6

2 SETS OF TURBOCHARGER			MET33MA	MET42MA	MET53MA	MET60MA	MET66MA	MET71MA	MET83MA	MET90MA
LO tank	min. residual capacity	m^3	0.36	0.54	0.86	1.06	1.33	1.76	2.14	2.60
	total capacity	m^3	*1)							
LO pump *2)	capacity	m^3/h	Refer to GTD							
	capacity	l/min								
	*3) delivery	bar	4.0							
	min. pre-lubrication time	min	-							
	min. post-lubrication time	min	30							
Blow-By	capacity	m^3/h	*4)							
	capacity	l/min								
Nominal pipe diameter	A	DN	32	40	50	65	65	65	80	100
		dia mm	ø 42.4x2.6	ø 48.3x2.6	ø 60.3x2.9	ø 76.1x2.9	ø 76.1x2.9	ø 76.1x2.9	ø 60.3x2.9	ø 114.3x3.6
	B	DN	100	125	125	150	150	200	200	200
		dia mm	ø114.3x3.6	ø 139.7x4	ø 139.7x4	ø 168.3x4.5	ø 168.3x4.5	ø219.1x6.3	ø 219.1x6.3	ø 219.1x6.3
	C	DN	50	65	80	100	100	100	125	125
		dia mm	ø 60.3x2.9	ø 76.1x2.9	ø 88.9x3.2	ø114.3x3.6	ø114.3x3.6	ø114.3x3.6	ø 139.7x4	ø 139.7x4

3 SETS OF TURBOCHARGER			MET53MA	MET60MA	MET66MA	MET71MA	MET83MA	MET90MA
LO tank	min. residual capacity	m^3	1.29	1.59	2.00	2.64	3.21	3.90
	total capacity	m^3	*1)					
LO pump *2)	capacity	m^3/h	Refer to GTD					
	capacity	l/min						
	*3) delivery	bar	4.0					
	min. pre-lubrication time	min	-					
	min. post-lubrication time	min	30					
Blow-By	capacity	m^3/h	*4)					
	capacity	l/min						
Nominal pipe diameter	A	DN	65	80	80	80	100	100
		dia mm	ø 76.1x2.9	ø 88.9x3.2	ø 88.9x3.2	ø 88.9x3.2	ø 114.3x3.6	ø 114.3x3.6
	B	DN	150	200	200	250	250	250
		dia mm	ø 168.3x4.5	ø219.1x6.3	ø219.1x6.3	ø 273x6.3	ø273x6.3	ø273x6.3
	C	DN	100	125	125	125	150	150
		dia mm	ø114.3x3.6	ø139.7x4	ø139.7x4	ø 139.7x4	ø168.3x4.5	ø168.3x4.5

Approved

Next	Free space for ...	Number	Drawn date	Number	Drawn date	Number	Drawn date	Number	Drawn date

Q-Code XXXXX
Standard ISO; JIS
Main Drw.

WIN GD Winterthur Gas & Diesel

Product W-2S

LUBRICATING OIL SYSTEM
Separated TC lubricating
Schmieroelsystem

Units	mm kg	NX	Basic Material					Net Weight 0.001
Made	05.12.2016	dki021 DH Kim	Scale -	Size A0	Page 2/3	Material ID	PAAD245338	
Chkd	16.12.2016	wwa008 Wang	Design Group 9722	Drawing ID	DAAD083642	Rev. -		
Appd	16.12.2016	bha009 Haag						

SURFACE PROTECTION SEE GROUP 0344
TOLERANCING PRINCIPLE ISO8015
GENERAL TOLERANCES ACCORDING TO ISO2768-mK

Copyright Winterthur Gas & Diesel Ltd. All rights reserved. By taking possession of the drawing the recipient recognizes and honours these rights. Neither the whole nor any part of this drawing may be used in any way for construction, fabrication, marketing or any other purpose nor copied in any way nor made accessible to third parties without the previous written consent of Winterthur Gas & Diesel Ltd.

ORIGINAL DRAWING - COPYRIGHT

Pos.	Description
001	MHI-Turbocharger (MET-MB)
002	Lubricating oil drain tank
003	Heating coil
004	Suction filter
005	Lubricating oil pump
006	Lubricating oil cooler
007	Automatic temperature control valve
008	Lubricating oil filter
009	Pressure regulating valve
I	Lubricating oil inlet *5)
II	Lubricating oil outlet *5)
III	Air vent *5)

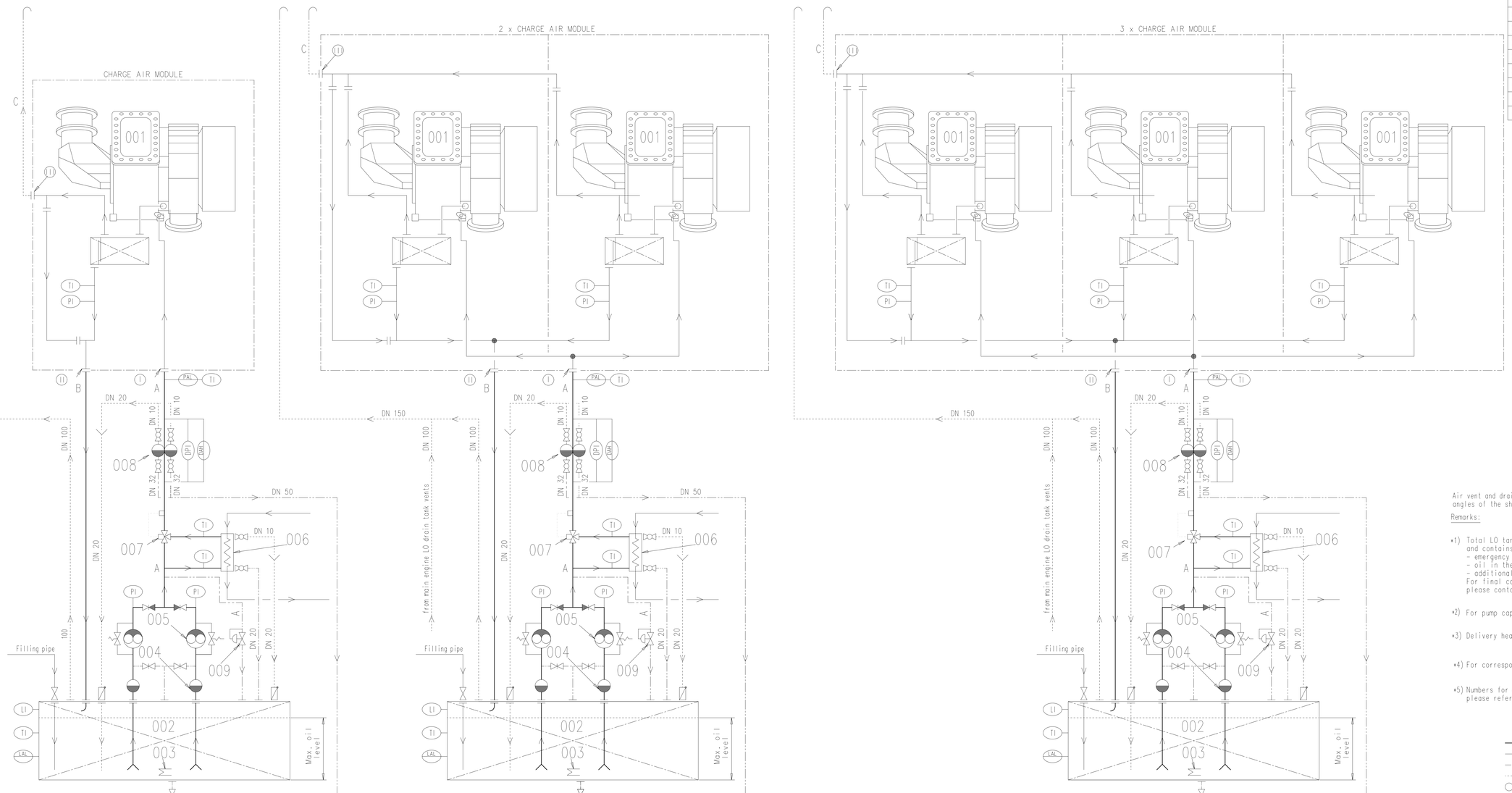

Air vent and drain pipes must be fully functional at all inclination angles of the ship at which the engine must be operational.

Remarks:

*1) Total LO tank capacity is higher than min. residual volume and contains additional volumes:
- emergency oil in the integrated head tank
- oil in the pipeline which drains back, when pump is stopped
- additional volume for air
For final confirmation of total capacity, please contact the turbocharger manufacturer.

*2) For pump capacity, temperature and oil viscosity, please refer to the GTD program.

*3) Delivery head must be according to the actual piping layout.

*4) For corresponding data, please refer to manufacturer of turbocharger.

*5) Numbers for engine pipe connections, please refer to the pipe connection plan for specific engine.

- Bearing LO pipes
- Transfer/dirty LO pipes
- Overflow/drain pipes
- Air vent pipes
- Pipe connections
- Pipes on engine

1 SET OF TURBOCHARGER			MET33MB	MET42MB	MET48MB	MET53MB	MET60MB	MET66MB	MET71MB	MET83MB	MET90MB
LO tank	min. residual capacity	m^3	0,21	0,31	0,41	0,49	0,61	0,77	1,01	1,23	1,50
	total capacity	m^3	*1)								
LO pump *2)	capacity	m^3/h	Refer to GTD								
	capacity	l/min									
	*3) delivery	bar	4,0								
	min. pre-lubrication time	min	-								
	min. post-lubrication time	min	30								
Blow-By	capacity	m^3/h	*4)								
	capacity	l/min									
Nominal pipe diameter	A	DN	20	25	32	32	32	32	32	40	50
		dia mm	ø 25x2	ø 33,7x2,6	ø 42,4x2,6	ø 42,4x2,6	ø 42,4x2,6	ø 42,4x2,6	ø 42,4x2,6	ø 48,3x2,6	ø 60,3x2,9
	B	DN	50	65	80	80	100	100	125	125	150
		dia mm	ø 60,3x2,9	ø 76,1x2,9	ø 88,9x3,2	ø 88,9x3,2	ø 114,3x3,6	ø 114,3x3,6	ø 139,7x4	ø 139,7x4	ø 168,3x4,5
	C	DN	40	50	65	65	80	80	80	100	100
		dia mm	ø 48,3x2,6	ø 60,3x2,9	ø 76,1x2,9	ø 76,1x2,9	ø 88,9x3,2	ø 88,9x3,2	ø 88,9x3,2	ø114,3x3,6	ø 114,3x3,6

2 SETS OF TURBOCHARGER			MET33MB	MET42MB	MET48MB	MET53MB	MET60MB	MET66MB	MET71MB	MET83MB	MET90MB
LO tank	min. residual capacity	m^3	0,41	0,62	0,82	0,99	1,22	1,53	2,02	2,46	2,99
	total capacity	m^3	*1)								
LO pump *2)	capacity	m^3/h	Refer to GTD								
	capacity	l/min									
	*3) delivery	bar	4,0								
	min. pre-lubrication time	min	-								
	min. post-lubrication time	min	30								
Blow-By	capacity	m^3/h	*4)								
	capacity	l/min									
Nominal pipe diameter	A	DN	32	40	40	50	50	50	50	65	80
		dia mm	ø 42,4x2,6	ø 48,3x2,6	ø 48,3x2,6	ø 60,3x2,9	ø 60,3x2,9	ø 60,3x2,9	ø 60,3x2,9	ø 76,1x2,9	ø 88,9x3,2
	B	DN	80	100	125	125	125	150	200	200	200
		dia mm	ø 88,9x3,2	ø 114,3x3,6	ø 139,7x4	ø 139,7x4	ø139,7x4	ø 168,3x4,5	ø 219,1x6,3	ø 219,1x6,3	ø 219,1x6,3
	C	DN	50	65	80	80	100	100	100	125	125
		dia mm	ø 60,3x2,9	ø 76,1x2,9	ø 88,9x3,2	ø 88,9x3,2	ø114,3x3,6	ø 114,3x3,6	ø 114,3x3,6	ø 139,7x4	ø 139,7x4

3 SETS OF TURBOCHARGER			MET53MB	MET60MB	MET66MB	MET71MB	MET83MB	MET90MB
LO tank	min. residual capacity	m^3	1,48	1,83	2,30	3,04	3,69	4,49
	total capacity	m^3	*1)					
LO pump *2)	capacity	m^3/h	Refer to GTD					
	capacity	l/min						
	*3) delivery	bar	4,0					
	min. pre-lubrication time	min	-					
	min. post-lubrication time	min	30					
Blow-By	capacity	m^3/h	*4)					
	capacity	l/min						
Nominal pipe diameter	A	DN	65	65	65	65	80	100
		dia mm	ø 76,1x2,9	ø 76,1x2,9	ø 76,1x2,9	ø 76,1x2,9	ø 88,9x3,2	ø 114,3x3,6
	B	DN	150	150	200	200	250	250
		dia mm	ø 168,3x4,5	ø168,3x4,5	ø 219,1x6,3	ø 219,1x6,3	ø273x6,3	ø273x6,3
	C	DN	100	125	125	125	150	150
		dia mm	ø114,3x3,6	ø139,7x4	ø 139,7x4	ø 139,7x4	ø168,3x4,5	ø168,3x4,5

Free sheet for Notes

Main Dw.

Q-Code XXXXX

Standard ISO; JIS

Mod	Number	Drawn date	Number	Drawn date	Number	Drawn date	Number	Drawn date

WIN GD Winterthur Gas & Diesel

Product W-25

LUBRICATING OIL SYSTEM
Separated TC lubricating
Schmieroelsystem

Units mm kg | NX | Basic Material | Net Weight 0,001

SURFACE PROTECTION SEE GROUP 0344	Made	05.12.2016	dki021	DH Kim	Scale –	Size A0	Page 3/3
TOLERANCING PRINCIPLE ISO8015	Chkd	16.12.2016	wwa008	Wang	Design Group 9722	Drawing ID DAAD083642	Material ID PAAD245338
GENERAL TOLERANCES ACCORDING TO ISO2768-mK	Appd	16.12.2016	bha009	Haag			Rev. –

Approved

PROFESSIONAL DRAWING - confidential

Copyright Winterthur Gas & Diesel Ltd. All rights reserved. By taking possession of the drawing the recipient recognizes and honours these rights. Neither the whole nor any part of this drawing may be used in any way for construction, fabrication, marketing or any other purpose nor copied in any way nor made accessible to third parties without the previous written consent of Winterthur Gas & Diesel Ltd.

MIDS_WinGD-RT-flex48T-D_LUBRICATING-OIL-SYSTEM (DG9722)

TRACK CHANGES

DATE	SUBJECT	DESCRIPTION
2017-08-21	DRAWING SET	First web upload
2018-05-23	DAAD015999 DAAD080720	System drgs – new revision
2018-10-18	DAAD015999 DAAD080720	System drgs – new revision

DISCLAIMER

© Copyright by Winterthur Gas & Diesel Ltd.
All rights reserved. No part of this document may be reproduced or copied in any form or by any means (electronic, mechanical, graphic, photocopying, recording, taping or other information retrieval systems) without the prior written permission of the copyright owner.

THIS PUBLICATION IS DESIGNED TO PROVIDE AN ACCURATE AND AUTHORITATIVE INFORMATION WITH REGARD TO THE SUBJECT-MATTER COVERED AS WAS AVAILABLE AT THE TIME OF PRINTING. HOWEVER, THE PUBLICATION DEALS WITH COMPLICATED TECHNICAL MATTERS SUITED ONLY FOR SPECIALISTS IN THE AREA, AND THE DESIGN OF THE SUBJECT-PRODUCTS IS SUBJECT TO REGULAR IMPROVEMENTS, MODIFICATIONS AND CHANGES. CONSEQUENTLY, THE PUBLISHER AND COPYRIGHT OWNER OF THIS PUBLICATION CAN NOT ACCEPT ANY RESPONSIBILITY OR LIABILITY FOR ANY EVENTUAL ERRORS OR OMISSIONS IN THIS BOOKLET OR FOR DISCREPANCIES ARISING FROM THE FEATURES OF ANY ACTUAL ITEM IN THE RESPECTIVE PRODUCT BEING DIFFERENT FROM THOSE SHOWN IN THIS PUBLICATION. THE PUBLISHER AND COPYRIGHT OWNER SHALL UNDER NO CIRCUMSTANCES BE HELD LIABLE FOR ANY FINANCIAL CONSEQUENTIAL DAMAGES OR OTHER LOSS, OR ANY OTHER DAMAGE OR INJURY, SUFFERED BY ANY PARTY MAKING USE OF THIS PUBLICATION OR THE INFORMATION CONTAINED HEREIN.

Winterthur Gas & Diesel Ltd.
Winterthur Gas & Diesel AG.
Winterthur Gas & Diesel S.A.

Schützenstrasse 3
PO Box 414, CH-8401
Winterthur, Switzerland

Tel. +41 (0)52 264 8844
Fax +41 (0)52 264 8866

www.wingd.com