107.433.085.200	Central cooling water system with separated HT circuit.
107.433.085.201	Central cooling water system with integrated HT circuit.

Net Weight							
0,002	0,003						
1	1	003	107.429.532.500	CONCEPT GUIDANCE Freshwater generation	107.429.532		0,001
1	–	002	107.433.087.200	COOLING WATER SYSTEMS	107.433.087		0,001
–	1	001	107.433.086.200	COOLING WATER SYSTEMS	107.433.086		0,002
Quantity PER ENGINE		SEQ NO	Material ID	Material Name Dimension, Occ	Standard or Drawing	Basic Material Material Standard	Weight GR./NET

107.433.085.201 / 107.433.085.200 Material ID

Free space for lic.

Q-Code XXXXX

Standard ISO; JIS

Main Drw. H

Modif.		Number	Drawn date		Number	Drawn date		Number	Drawn date		Number	Drawn date
	A	EAAD089971	29.10.2018									

WIN GD Winterthur Gas & Diesel

Product 5-8RT-flex48T-D

COOLING WATER SYSTEMS

Kuehlwassersystem

Units mm kg | NX | Basic Material | Net Weight

SURFACE PROTECTION SEE GROUP 0344

TOLERANCING PRINCIPLE ISO8015

GENERAL TOLERANCES ACCORDING TO ISO2768-mK

Made 19.03.2010 J.BAUMANN

Chkd

Appd 24.03.2010 JBA029 Baumann

Scale –

Design Group 9721

Size A3 | Page 1/1 | Material ID

Drawing ID 107.433.085 | Rev. A

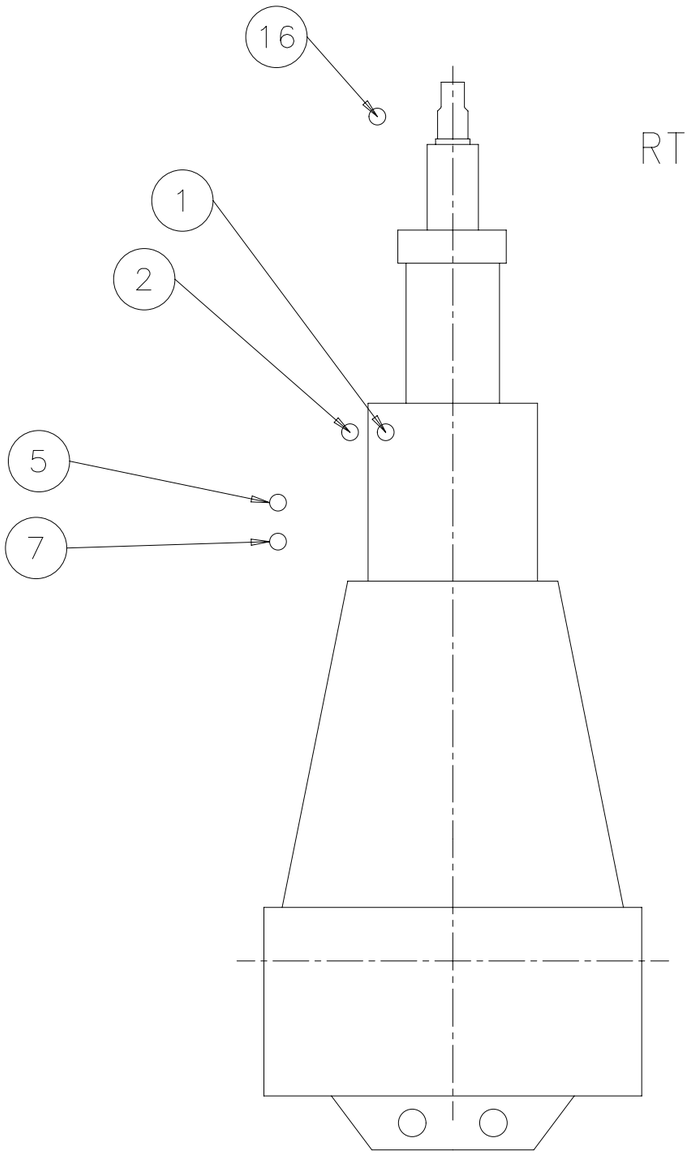
Approved

ASD - ASSEMBLY DRAWING - Internal

Copyright Winterthur Gas & Diesel Ltd. All rights reserved. By taking possession of the drawing the recipient recognizes and honours these rights. Neither the whole nor any part of this drawing may be used in any way for construction, fabrication, marketing or any other purpose nor copied in any way nor made accessible to third parties without the previous written consent of Winterthur Gas & Diesel Ltd.

SPECIFICATION which must be met: (C)

(16)	OUTLET - Cylinder cooling water air vent - Vented throught expansion tank - Water flow restricted by orifice
(1)	INLET - Cylinder cooling water - Cooling water pressure: 3.0 - 5.0 bar - Cooling water volume flow: according to GTD specification. - Cooling water (freshwater) must be treated according to WinGD's specification.
(2)	OUTLET - Cylinder cooling water - Cooling water temperature set-point: 90 °C - Steady state condition: 90 ± 2 °C - Transient condition: 90 ± 4 °C
(5)	INLET - SAC LT cooling water - Cooling water pressure: 2.0 - 4.0 bar - Cooling water temperature: 10 - 36 °C - Cooling water volume flow: according to GTD specification. - Cooling water (freshwater) must be treated according to WinGD's specification
(7)	OUTLET - SAC LT cooling water and air vent - Cooling water volume flow: according to GTD specification, adjusted by orifice in outlet pipe on plant side.



RT-flex48T-D

QTY	SEQ NO	Material ID	Material Name / Dimension, Occ	Standard or Drawing	Basic Material / Material Standard	Weight GR./NET
1	016	107.245.419.500	EXPANSION TANK	107.245.419		0,001
1	015	107.362.179.500	EXPANSION TANK 1	107.362.179		0,001

Free space for lic.

Q-Code: XXXXX

Standard: ISO; JIS

Main Drw.

Modif.	Number	Drawn date	Number	Drawn date	Number	Drawn date	Number	Drawn date
(A)	EAAD085793	01.06.2015						
(B)	EAAD086766	15.09.2016						
(C)	EAAD089971	14.11.2018						

WIN GD Winterthur Gas & Diesel

Product: 5-8RT-flex48T-D

COOLING WATER SYSTEMS WITH SEPARATED HT CIRCUIT

Kuehlwassersystem

Units mm kg	NX	Basic Material			Net Weight 0,002
SURFACE PROTECTION SEE GROUP 0344	Made 02.08.2007 M.PRSTEC	Scale -	Size A3	Page 1/2	Material ID 107.433.086.200
TOLERANCING PRINCIPLE ISO8015	Chkd	Design Group 9721	Drawing ID 107.433.086		Rev. C
GENERAL TOLERANCES ACCORDING TO ISO2768-mK	Appd 24.03.2010 JBA029 Baumann				

Approved

ASD - ASSEMBLY DRAWING - Internal

Copyright Winterthur Gas & Diesel Ltd. All rights reserved. By taking possession of the drawing the recipient recognizes and honours these rights. Neither the whole nor any part of this drawing may be used in any way for construction, fabrication, marketing or any other purpose nor copied in any way nor made accessible to third parties without the previous written consent of Winterthur Gas & Diesel Ltd.

SYSTEM PROPOSAL

Pos.	ENGINE COMPONENTS *3) Ⓒ
EC01	Air vent pipe CCW system
EC02	Scavenge air cooler (SAC)

Pos.	ENGINE CONNECTIONS *2) Ⓒ
(1)	INLET - HT cooling water (free or driving end)
(2)	OUTLET - HT cooling water (free or driving end)
(5)	INLET - Scavenge air cooler, LT cooling water *7)
(7)	OUTLET - Scavenge air cooler, LT cooling water and air vent *7)
(16)	OUTLET - Cylinder cooling water air vent (free or driving end) *12)

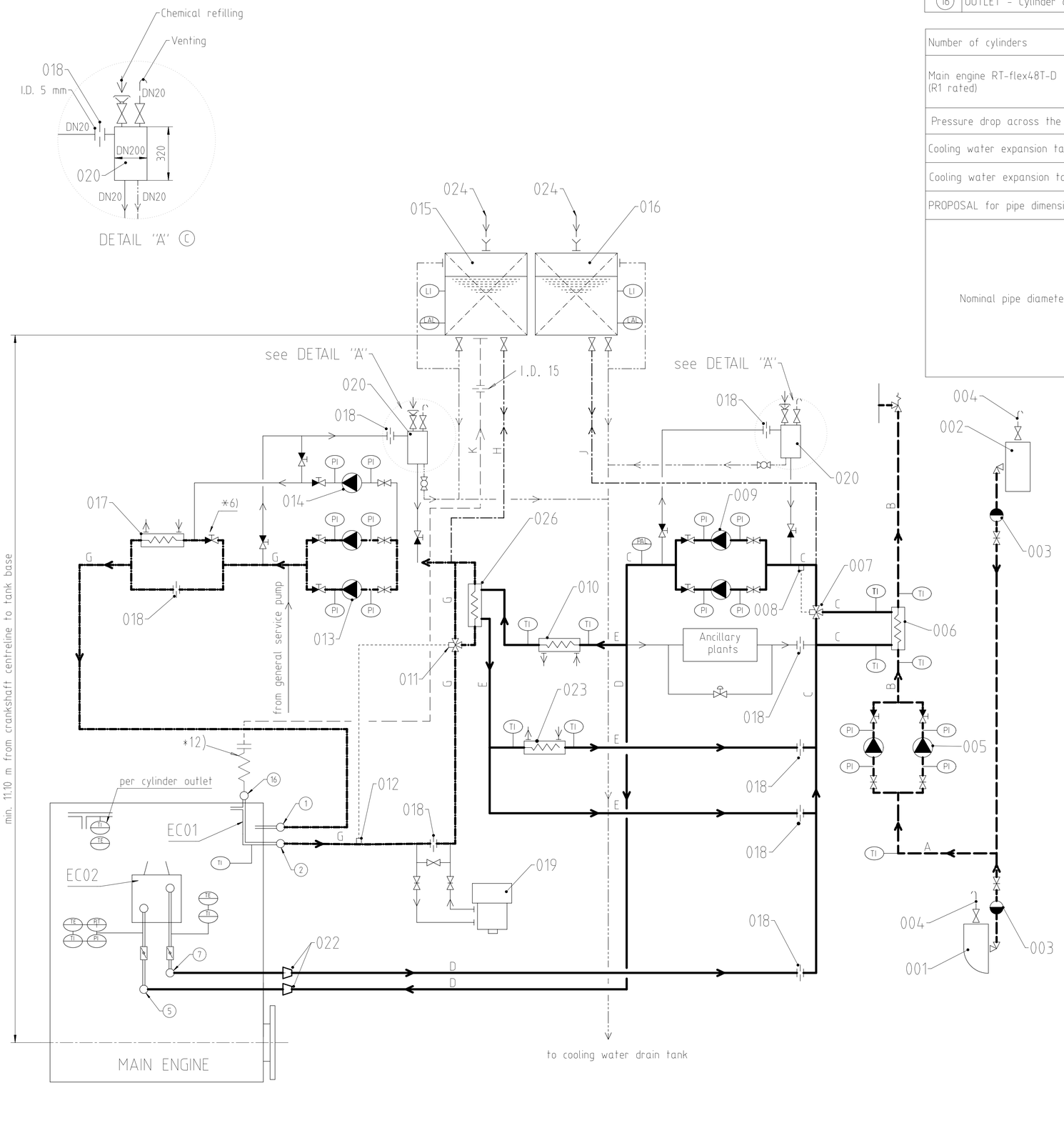
Number of cylinders			5	6	7	8
Main engine RT-flex48T-D (R1 rated)	power	(kW)	7275	8730	10185	11640
	speed	(rpm)	127			
Pressure drop across the engine		(bar)	1.3			
Cooling water expansion tank (HT)	Cap.	(m^3)	0.5	0.5	0.5	0.5
Cooling water expansion tank (LT)	Cap.	(m^3)	Depending on ancillary plants min. 10% of LT cooling water			
PROPOSAL for pipe dimensioning *11) Ⓒ						
Nominal pipe diameter	A	DN	Yard determination, suitable for main engine and ancillary plants			
	B	DN				
	C	DN				
	D	DN	125	125	125	125
	E	DN	100	100	125	125
	G	DN	100	125	125	125
	H	DN	65	65	65	65
	J	DN	80	80	80	80
	K	DN	40	40	40	40

Pos.	SYSTEM COMPONENTS *1) Ⓒ
001	Low sea chest
002	High sea chest
003	Seawater strainer
004	Air vent (air vent pipe or equal venting system acc. to shipyard's design)
005	Seawater circulating pump
006	Central seawater cooler
007	Automatic temperature control valve for LT circuit *13)
008	LT water temperature sensor *13)
009	Cooling water pump for LT circuit
010	Lubricating oil cooler
011	Automatic temperature control valve for HT circuit *14)
012	HT water temperature sensor *14)
013	Cylinder cooling water pump for HT circuit
014	Pre-heating circulating pump (optional), cap. 10% from cylinder cooling pump *8)
015	HT water expansion tank (link to detail drawing on page 1)
016	LT water expansion tank (link to detail drawing on page 1)
017	Pre-heater for main engine (HT circuit)
018	Throttling disc *5)
019	Freshwater generator
020	Chemical treatment refill unit *4)
021	HT cooling water cooler
022	Transition piece (adapter) *9)
023	MDO/MGO cooler
024	Filling pipe / inlet chemical treatment

Remarks: Ⓒ

- Air vent and drain pipes not shown on drawing. Shall be installed where required.
- Air vent and drain pipes must be fully functional at all inclination angles of the ship at which the engine must be operational.

*1) To be delivered by external supplier and to be installed by the shipyard.
*2) Refer to the "Pipe Conection Plan" for the execution and location of the engine pipe connection.
*3) To be delivered by the engine manufacturer, i.e. already equipped on engine side.
*4) To be installed for cooling water after-treatment during regular engine operation. Convenient dimensions are provided in view "A". Other designs are possible.
*5) When using a valve, lock in proper position to avoid mishandling.
*6) Only when pos. 014 is installed.
*7) The inlet and outlet pipes to SAC must be designed to allow engine thermal expansion, or be fitted with expansion pieces.
*8) For guidance only, final layout according to actual engine pre-heating requirements.
*9) Installed as required (check with "Pipe Connection Plan")
*11) All given diameters are valid for the mentioned rating and serve just as an example. To make the layout for the project specific rating please refer to DG9730 "Fluid velocities and flow rates, recommended values for pipework of diesel plants" for selecting the approriate pipe diameter. Rating specific flow rates are provided by GTD.
*12) Depending on vibration a flexible hose connection may be recommendable
*13) A constant temperature at engine inlet must be maintained. Temperature set-point can be selected between 10 - 36 °C. WinGD recommends a set-point of 25 °C. A lower LT water temperature assists the main engine to reach lower BSFC . If the ancillary plants require a lower or greater LT water temperature a separate water supply system with different temperature set-point has to be installed (please refer to the system proposal in MIM)
*14) A constant temperature at engine outlet must be maintained. Required controller set-point for main engine operation is 90 °C.



Seawater pipes
LT freshwater pipes
HT freshwater pipes
Balance pipes
Ancillary equipment pipes
Drain/overflow pipes
Air vent pipes
Control/feed back
Pipes on Engine
Pipe connections

Approved

Free space for ic.								Q-Code XXXXX	Main Drw.
								Standard ISO; JIS	
Modif.	A EAAD085793	01.06.2015	B EAAD086766	15.09.2016	C EAAD089971	14.11.2018			
	Number	Drawn date	Number	Drawn date	Number	Drawn date	Number	Drawn date	

WIN GD Winterthur Gas & Diesel

Product 5-8RT-flex48T-D

COOLING WATER SYSTEMS WITH SEPARATED HT CIRCUIT

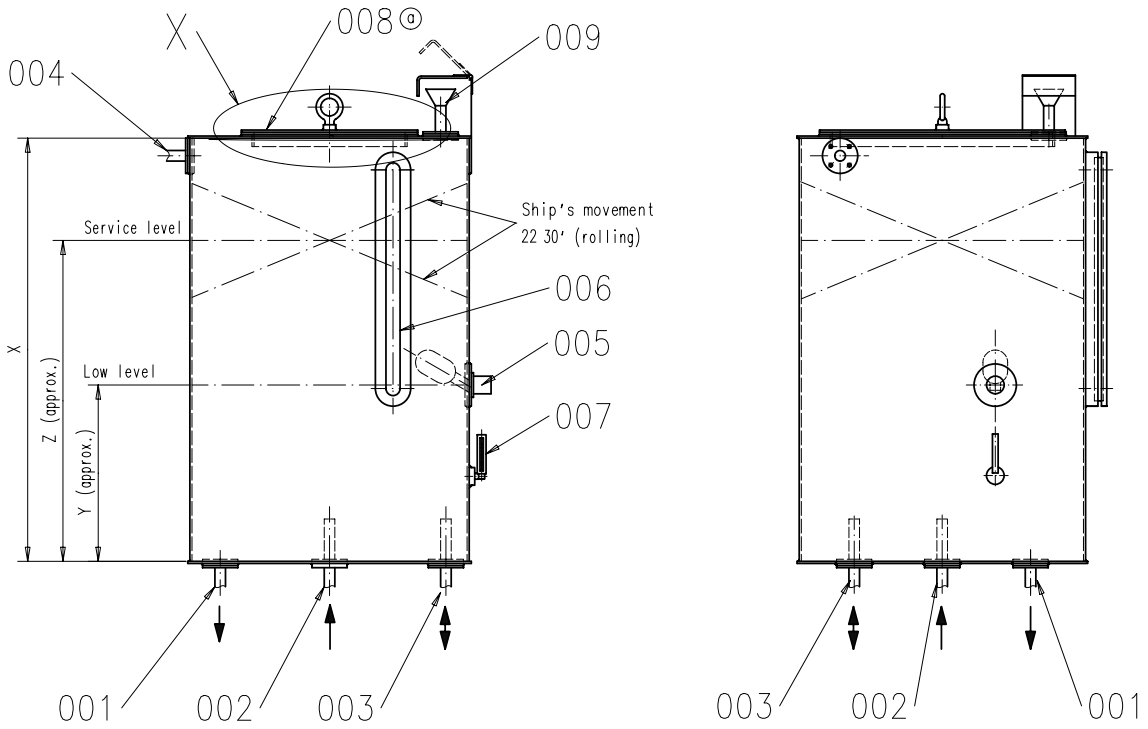
Kuehlwassersystem

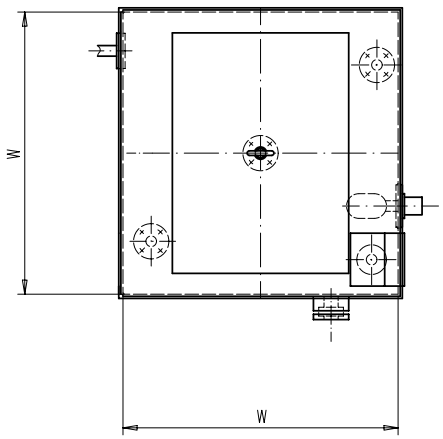
Units	mm kg	NX	Basic Material	Net Weight 0,002

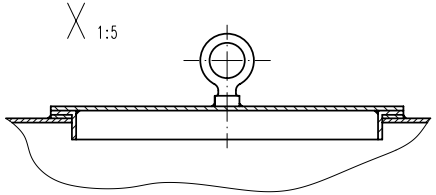
SURFACE PROTECTION SEE GROUP 0344	Made	02.08.2007 M.PRSTEC	Scale -	Size A1	Page 2/2	Material ID 107.433.086.200
TOLERANCING PRINCIPLE ISO8015	Chkd		Design Group 9721	Drawing ID 107.433.086		Rev. C
GENERAL TOLERANCES ACCORDING TO ISO2768-mK	Appd	24.03.2010 JBA029 Baumann				

ASD - ASSEMBLY DRAWING - internal

Copyright Winterthur Gas & Diesel Ltd. All rights reserved. By taking possession of the drawing the recipient recognizes and honours these rights. Neither the whole nor any part of this drawing may be used in any way for construction, fabrication, marketing or any other purpose nor copied in any way nor made accessible to third parties without the previous written consent of Winterthur Gas & Diesel Ltd.







drawn for 0.75 m^3 capacity

Pos.	Description
001	Drain from HT circuit
002	Air vent from HT circuit
003	Balance pipe from HT circuit
004	Overflow/air vent
005	Low level alarm
006	Level indicator *1)
007	Thermometer
008	Inspection cover *2)
009	Filling pipe/inlet chemical treatment *2)
010	
011	

Remarks:

*1) Level indicator can be omitted if an alternative is fitted.

*2) Other designs like hinged covers, etc. are also possible

- For reapacity and pipe diameters refer to drawing 'Central cooling water system' and 'Jacket cooling water system'

Table 1: Tank dimensions

HT Tank capacity	W	X	Y	Z
(m^3)	(mm)	(mm)	(mm)	(mm)
0.5	800	800	330	640
0.75	800	1200	500	960
1.0	800	1600	670	1280
1.25	1000	1250	530	1000
1.5	1000	1500	630	1200
1.75	1000	1750	730	1400
2.0	1000	2000	830	1600

Wärtsilä Switzerland Ltd retains all rights to this drawing. By taking possession of the drawing, the recipient recognizes these rights and undertakes not to reproduce the drawing in whole or parts, neither to communicate it to third parties, nor to make use of it himself or through third parties for any purpose not explicitly authorized by Wärtsilä Switzerland Ltd. In case of violation, the recipient will be liable to damages.

Free space for lic.

First introduced at: RT-flex

Modifications

	Number	Drawn date	Number	Drawn date	Number	Drawn date
a	7-67.959	28.04.09				

Q-Code: X X X X Substitute for

Scale 1:10; 1:5

Ausgleichstank
Zentralkuehlwassersystem HT circuit

Drawn: S. Natali 26.10.05

Wärtsilä Switzerland Ltd

EXPANSION TANK
CENTRAL COOLING WATER HT CIRCUIT

CAD

WÄRTSILÄ

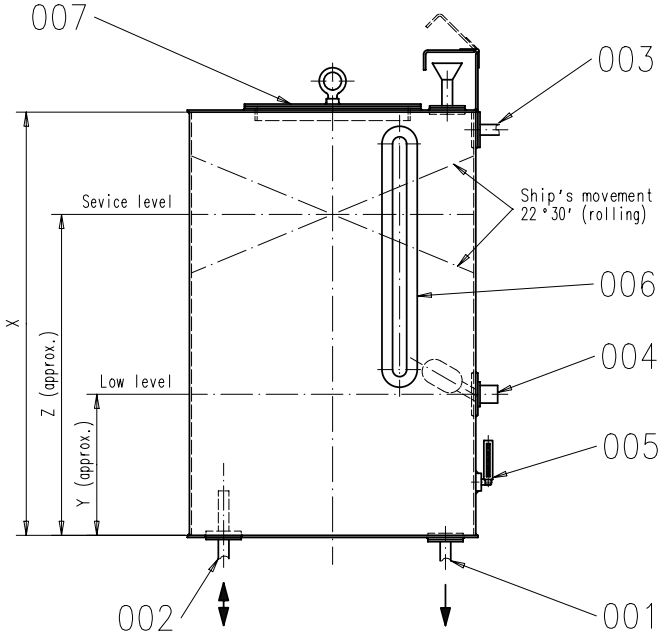
SURFACE PROTECTION SEE GROUP 0344

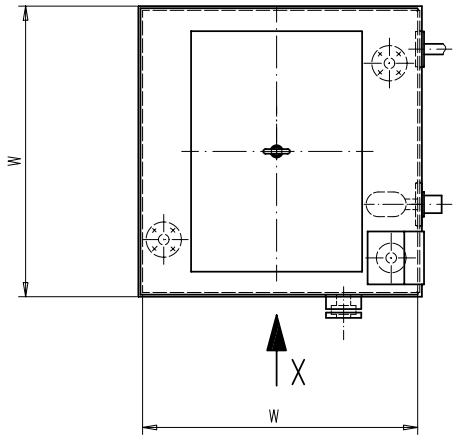
GENERAL TOLERANCES ACCORDING TO ISO/2768-m

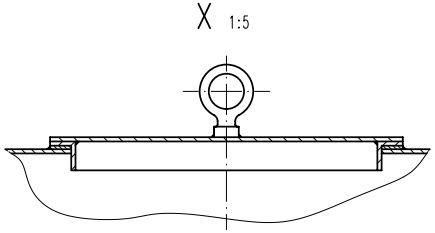
Design group: 9721 ISO JIS

2-107.362.179

Page:







Drawn for 0.75 m^3 capacity

Pos.	Description
001	Drain
002	Balance pipe from LT circuit
003	Overflow/air vent
004	Low level alarm
005	Thermometer
006	Level indicator *1)
007	Inspection cover *2)
008	Filling pipe/inlet chemical treatment *2)
009	

Remarks:

*1) Level indicator can be omitted if an alternative is fitted.
*2) Other designs like hinged covers, etc. are also possible

- For required tank capacity and pipe diameters refer to drawing 'Central cooling water system'

Table 1: Tank dimensions

LT tank capacity	W	X	Y	Z
(m^3)	(mm)	(mm)	(mm)	(mm)
0.5	800	800	330	640
0.75	800	1200	500	960
1.0	800	1600	670	1280
1.25	1000	1250	530	1000
1.5	1000	1500	630	1200
1.75	1000	1750	730	1400
2.0	1000	2000	830	1600

Free space for lic.

Q-Code XXXXX Standard ISO JIS Main Drw.

Modif: A 7-14.356 11.06.1997 | B 7-37.090 26.09.2005 | C EAAD083145 14.09.2011

WÄRTSILÄ

Product RTMOT RT-flex

EXPANSION TANK
CENTRAL COOLING WATER LT CIRCUIT
Ausgleichstank
Zentralkuehlwassersystem LT

Units mm kg | IDE | Basic Material | Net Weight 0.001

SURFACE PROTECTION SEE GROUP 0344
TOLERANCING PRINCIPLE ISO8015
GENERAL TOLERANCES ACCORDING TO ISO2768-mK

Made 11.06.1997 T.LANDERT | Chkd | Appd 16.06.1997 wdms2 Administrator

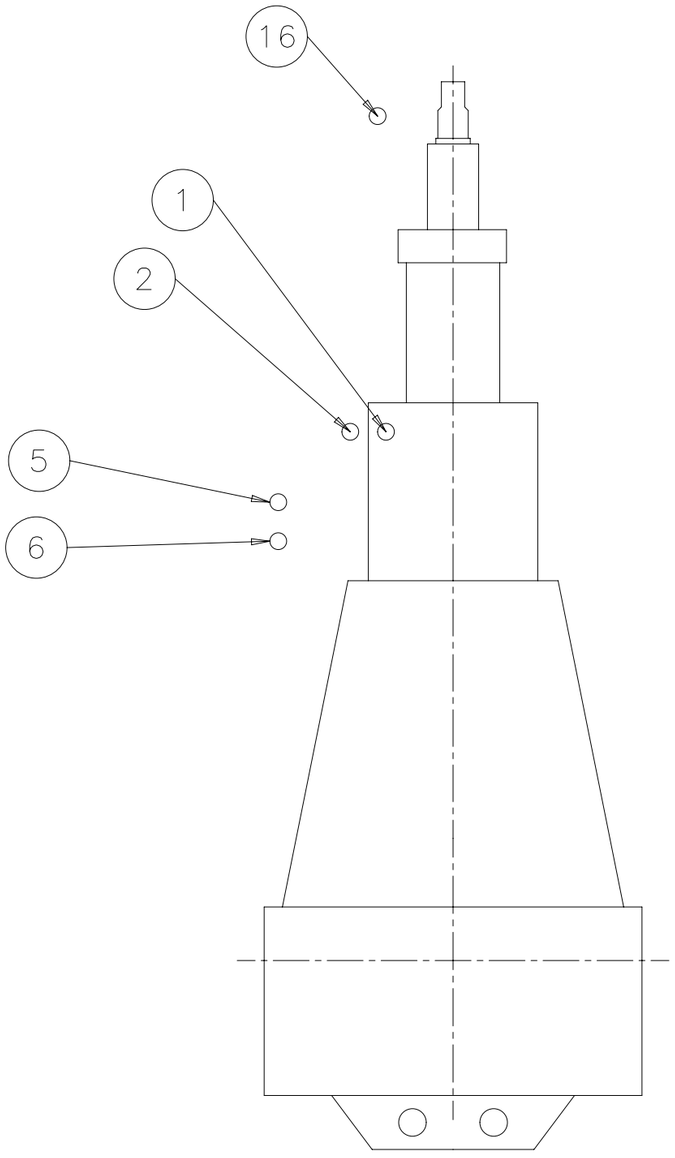
Scale 1:10 | Design Group 9721 | Size A2 | Page 1/1 | Material ID 107.245.419.500 | Drawing ID 107.245.419 | Rev. C

Approved

DID - DIMENSIONAL DRAWING - Confidential

Copyright Wärtsilä. All rights reserved. By taking possession of the drawing the recipient recognizes and honours these rights. Neither the whole nor any part of this drawing may be used in any way for construction, fabrication, marketing or any other purpose nor copied in any way nor made accessible to third parties without the previous written consent of Wärtsilä.

RT-flex48T-D



SPECIFICATION which must be met: Ⓒ

1	INLET - Cylinder cooling water - Cooling water pressure: 3.0 - 5.0 bar - Cooling water volume flow: according to GTD specification. - Cooling water (freshwater) must be treated according to WinGD's specification.
2	OUTLET - Cylinder cooling water - Cooling water temperature set-point: 90 °C - Steady state condition: 90 ± 2 °C - Transient condition: 90 ± 4 °C
5	INLET - SAC LT cooling water - Cooling water pressure: 2.0 - 4.0 bar - Cooling water temperature: 10 - 36 °C - Cooling water volume flow: according to GTD specification. - Cooling water (freshwater) must be treated according to WinGD's specification.
6	OUTLET - SAC LT cooling water and air vent - Cooling water volume flow: according to GTD specification, adjusted by orifice in outlet pipe on plant side.
16	OUTLET - Cylinder cooling water air vent - vented throught expansion tank - water flow restricted by orifice

1	017	107.362.343.500	EXPANSION TANK	107.362.343		0,001
QTY	SEQ NO	Material ID	Material Name / Dimension, Occ	Standard or Drawing	Basic Material / Material Standard	Weight GR./NET

Free space for lic.

Q-Code: XXXXX

Standard: ISO; JIS

Main Drw.

Modif.		Number	Drawn date
	A	EAAD085793	01.06.2015
	B	EAAD086766	15.09.2016
	C	EAAD089971	14.11.2018

WIN GD Winterthur Gas & Diesel

Product: 5-8RT-flex48T-D

COOLING WATER SYSTEMS WITH INTEGRATED HT CIRCUIT

Kuehlwassersystem

Units mm kg	NX		Basic Material			Net Weight 0,001
SURFACE PROTECTION SEE GROUP 0344	Made	19.03.2010 J.BAUMANN	Scale -	Size A3	Page 1/2	Material ID 107.433.087.200
TOLERANCING PRINCIPLE ISO8015	Chkd		Design Group 9721	Drawing ID 107.433.087		Rev. C
GENERAL TOLERANCES ACCORDING TO ISO2768-mK	Appd	24.03.2010 JBA029 Baumann				

Approved

ASD - ASSEMBLY DRAWING - Internal

Copyright Winterthur Gas & Diesel Ltd. All rights reserved. By taking possession of the drawing the recipient recognizes and honours these rights. Neither the whole nor any part of this drawing may be used in any way for construction, fabrication, marketing or any other purpose nor copied in any way nor made accessible to third parties without the previous written consent of Winterthur Gas & Diesel Ltd.

SYSTEM PROPOSAL

Pos.	ENGINE COMPONENTS *3) Ⓒ
EC01	Scavenge air cooler (SAC)
EC02	Throttling disc (adjustable, on engine free or driving end)
EC03	Air vent pipe (on engine free or driving end)

Pos.	ENGINE CONNECTIONS *2) Ⓒ
1	INLET - Cylinder cooling water (free or driving end)
2	OUTLET - Cylinder cooling water (free or driving end)
5	INLET - SAC LT cooling water *7)
6	OUTLET - SAC LT cooling water *7)
16	OUTLET - Cylinder cooling water air vent (free or driving end) *12)

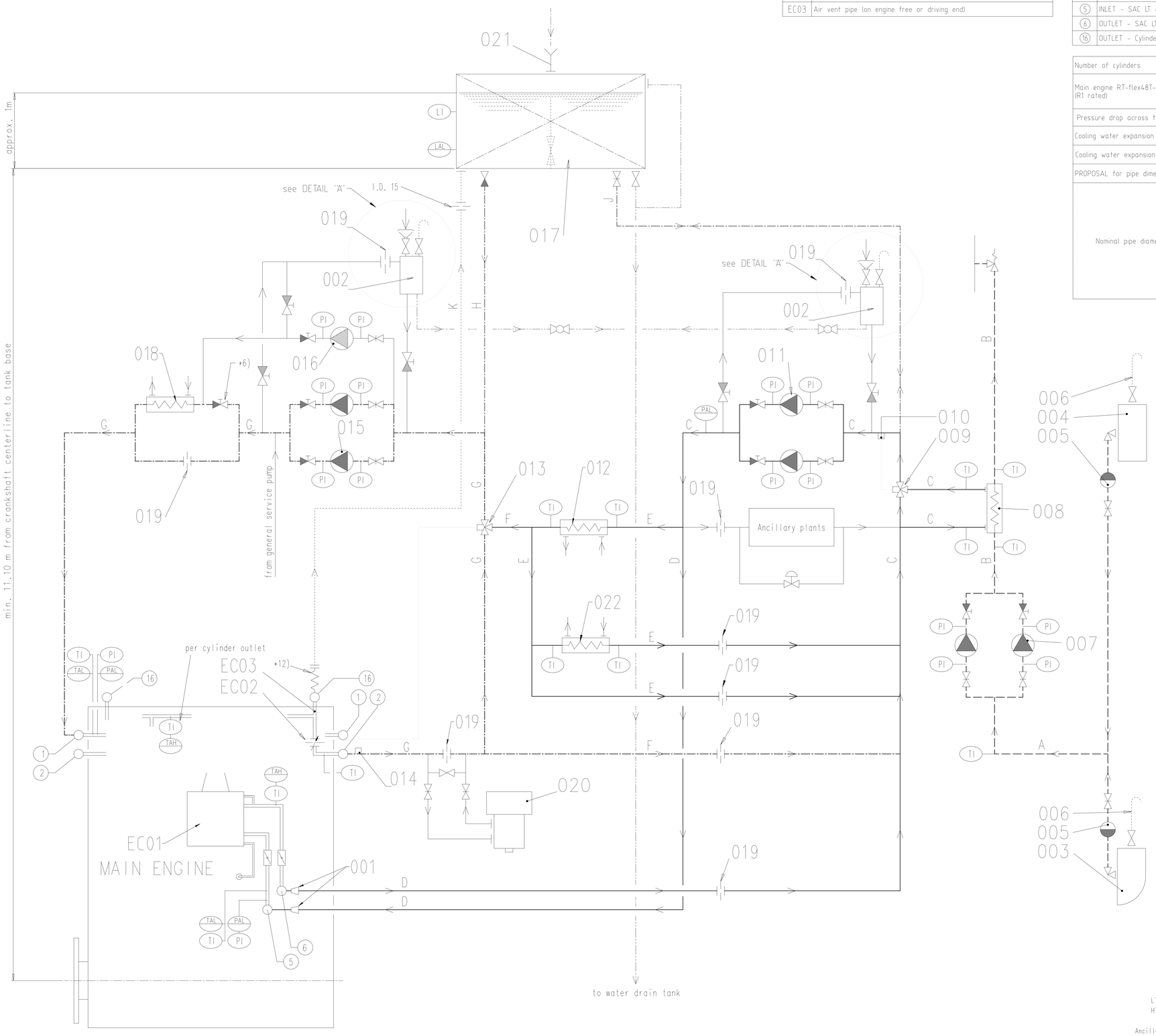
Number of cylinders			5	6	7	8
Main engine RT-flex48T-D (R1 rated)	power (kW)		7275	8730	10185	11640
	speed	(rpm)	127			
Pressure drop across the engine		(bar)	1.3			
Cooling water expansion tank (HT)	Cap.	(m^3)	Recommended: 0.5 m^3 min. 10% of HT cooling water			
Cooling water expansion tank (LT)	Cap.	(m^3)	Depending on ancillary plants min. 10% of LT cooling water			
PROPOSAL for pipe dimensioning *11) Ⓒ						
Nominal pipe diameter	A	DN	Yard determination, suitable for main engine and ancillary plants			
	B	DN				
	C	DN				
	D	DN	150	200	200	250
	E	DN	100	125	125	125
	F	DN	80	80	80	100
	G	DN	125	125	125	150
	H	DN	65	65	65	80
	J	DN	80	80	100	100
	K	DN	40	40	40	40

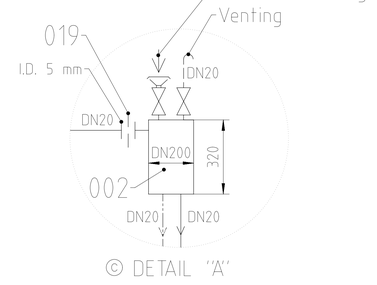
Pos.	SYSTEM COMPONENTS *1) Ⓒ
001	Transition piece (adapter) *9)
002	Chemical treatment refill unit *4)
003	Low sea chest
004	High sea chest
005	Seawater strainer
006	Air vent (air vent pipe or equal venting system acc. to shipyard's design)
007	Seawater circulating pump
008	Central seawater cooler
009	Automatic temperature control valve for LT circuit *13)
010	LT water temperature sensor *13)
011	Cooling water pump for LT circuit
012	Lubricating oil cooler
013	Automatic temperature control valve for HT circuit *14)
014	HT water temperature sensor *14)
015	Cylinder cooling water pump for HT circuit
016	Pre-heating circulating pump (optional), cap. 10% from cylinder cooling pump *8)
017	HT / LT water expansion tank (link to detail drawing on page 1)
018	Heater for main engine (HT circuit)
019	Throttling disc *5)
020	Freshwater generator
021	Filling pipe/inlet chemical treatment
022	MDO/MGO cooler

Remarks: Ⓒ

- Air vent and drain pipes not shown on drawing. Shall be installed where required.
- Air vent and drain pipes must be fully functional at all inclination angles of the ship at which the engine must be operational.

*1) To be delivered by external supplier and to be installed by the shipyard.
*2) Refer to the "Pipe Conection Plan" for the execution and location of the engine pipe connection.
*3) To be delivered by the engine manufacturer, i.e. already equipped on engine side.
*4) To be installed for cooling water after-treatment during regular engine operation. Convenient dimensions are provided in view "A". Other designs are possible.
*5) When using a valve, lock in proper position to avoid mishandling.
*6) Only when pos. 016 is installed.
*7) The inlet and outlet pipes to SAC must be designed to allow engine thermal expansion, or be fitted with expansion pieces.
*8) For guidance only, final layout according to actual engine pre-heating requirements.
*9) Installed as required (check with "Pipe Connection Plan")
*11) All given diameters are valid for the mentioned rating and serve just as an example. To make the layout for the project specific rating please refer to DG9730 "Fluid velocities and flow rates, recommended values for pipework of diesel plants" for selecting the approriate pipe diameter. Rating specific flow rates are provided by GTD.
*12) Depending on vibration a flexible hose connection may be recommendable.
*13) A constant temperature at engine inlet must be maintained. Temperature set-point can be selected between 10 - 36 °C. WinGD recommends a set-point of 25 °C. A lower LT water temperature assists the main engine to reach lower BSFC . If the ancillary plants require a lower or greater LT water temperature a separate water supply system with different temperature set-point has to be installed (please refer to the system proposal in MIM)
*14) A constant temperature at engine outlet must be maintained. Required controller set-point for main engine operation is 90 °C.





Seawater pipes
LT freshwater pipes
HT freshwater pipes
Balance pipe
Ancillary equipment pipes
Drain/overflow pipes
Control / feed back
Air vent pipes
Pipes on engine
pipe connections

Work	A EAD085793 01.06.2015	B EAD086766 15.09.2016	C EAD089971 14.11.2018					
	Number / Drawn date	Number / Drawn date	Number / Drawn date	Number / Drawn date				

Free issues for IC

Q-Code XXXXX
Standard ISO; JIS
Main Drw.

WIN GD Winterthur Gas & Diesel

Product 5-8RT-flex48T-D

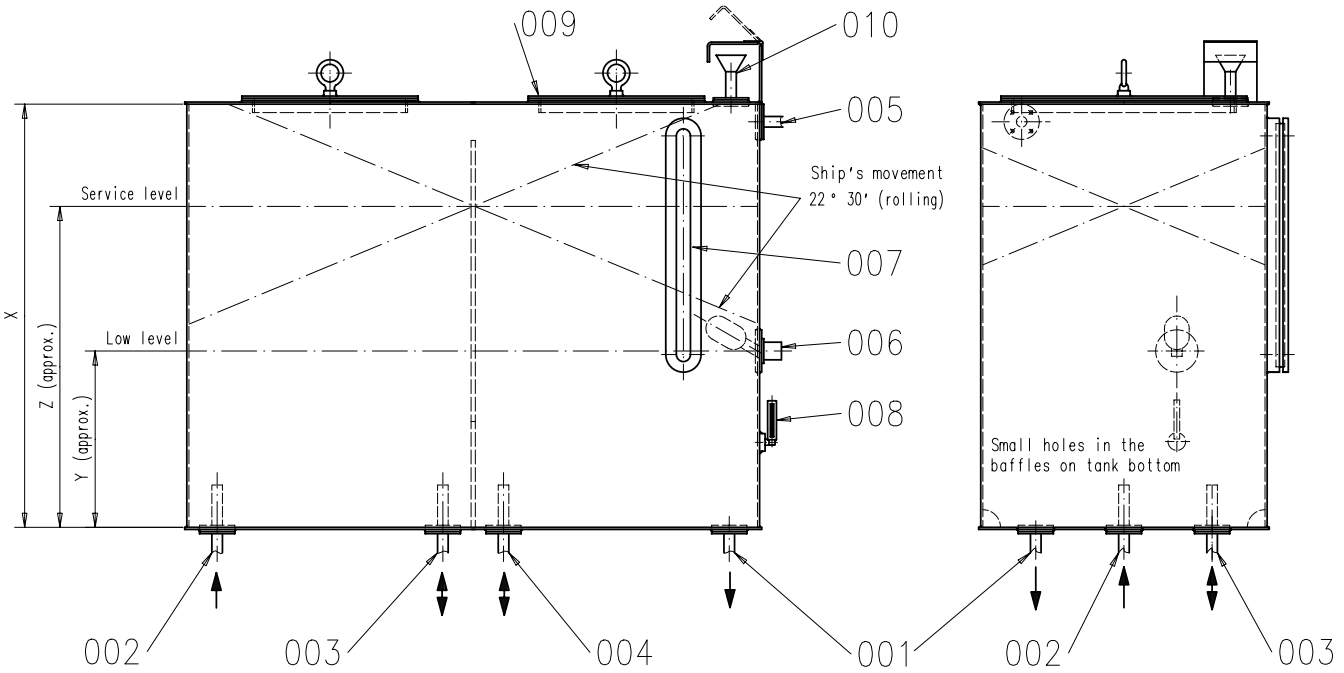
COOLING WATER SYSTEMS WITH INTEGRATED HT CIRCUIT
Kuehlwassersystem

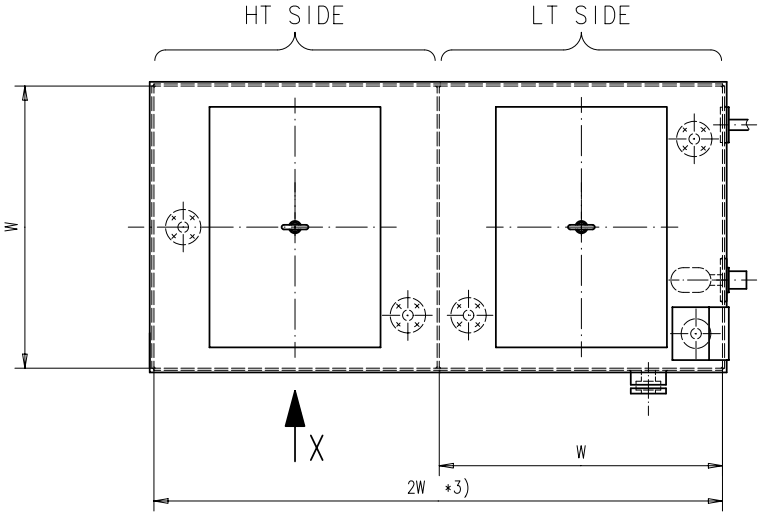
Units mm kg | NX | Basic Material | Net Weight 0.001

SURFACE PROTECTION SEE GROUP 0344	Made 19.03.2010 J.BAUMANN	Scale -	Size A0	Page 2/2	Material ID 107.433.087.200
TOLERANCING PRINCIPLE ISO8015	Chkd	Design Group 9721			
GENERAL TOLERANCES ACCORDING TO ISO2768-mK	Appd 24.03.2010 JBA029 Baumann		Drawing ID 107.433.087		Rev. C

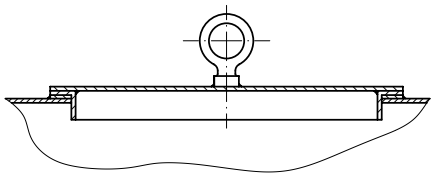
Copyright Winterthur Gas & Diesel Ltd. All rights reserved. By having possession of the drawing the recipient recognizes and honours these rights. Neither the whole nor any part of this drawing may be used in any way for construction, fabrication, marketing or any other purpose nor copied in any way nor made accessible to third parties without the previous written consent of Winterthur Gas & Diesel Ltd.

Approved





X 1:5



Drawn for 1.5 m^3 capacity

Pos.	Description
001	Drain
002	Air vent from HT circuit
003	Balance pipe from HT circuit
004	Balance pipe from LT circuit
005	Overflow/air vent
006	Low level alarm
007	Level indicator *1)
008	Thermometer
009	Inspection cover *2)
010	Filling pipe/inlet chemical treatment *2)
011	

Remarks:

*1) Level indicator can be omitted if an alternative is fitted.
*2) Other designs like hinged covers, etc. are also possible
*3) Depending on actual ancillary plants, LT tank capacity to be increased accordingly
- For required tank capacity and pipe diameters refer to drawing 'Central cooling water system'

Table 1: Tank dimensions

Total capacity *3)	W	X	Y	Z
(m^3)	(mm)	(mm)	(mm)	(mm)
1.0	800	800	330	640
1.5	800	1200	500	960
2.0	800	1600	670	1280
2.5	1000	1250	530	1000
3.0	1000	1500	630	1200
3.5	1000	1750	730	1400
4.0	1000	2000	830	1600

Wärtsilä Switzerland Ltd retains all rights to this drawing. By taking possession of the drawing, the recipient recognizes and honours these rights. Neither this drawing nor its content may be used for any purpose not explicitly agreed in writing by Wärtsilä Switzerland Ltd. Especially any duplication or marketing or any other purpose not explicitly agreed in writing by Wärtsilä Switzerland Ltd is prohibited and will be prosecuted. Wärtsilä Switzerland Ltd, in case of violation, the recipient will be liable to damages.

Modifications Free space for lic.

Number	Date	Number	Date	Number	Date	Number	Date

Q-Code X X X X Substitute for Scale 1:10, 1:5

Engine type
RT-flex
RTMOT

Ausgleichstank
Zentralkühlwassersystem
EXPANSION TANK
CENTRAL COOLING WATER SYSTEM

Drawn: S.NATALI 28.10.05
Wärtsilä Switzerland Ltd
CAD

Design group 9721 ISO JIS

2- 107.362.343

Page:

WÄRTSILÄ

SURFACE PROTECTION SEE GROUP 0344
GENERAL TOLERANCES ACCORDING TO ISO/2768-m

MIDS - WinGD RT-flex48T-D - Cooling Water System (DG9721)

TRACK CHANGES

DATE	SUBJECT	DESCRIPTION
2017-08-21	DRAWING SET	First web upload
2018-12-13	107.433.085 107.433.087 107.433.086	Main and system drgs – new revision

DISCLAIMER

© Copyright by Winterthur Gas & Diesel Ltd.
All rights reserved. No part of this document may be reproduced or copied in any form or by any means (electronic, mechanical, graphic, photocopying, recording, taping or other information retrieval systems) without the prior written permission of the copyright owner.

THIS PUBLICATION IS DESIGNED TO PROVIDE AN ACCURATE AND AUTHORITATIVE INFORMATION WITH REGARD TO THE SUBJECT-MATTER COVERED AS WAS AVAILABLE AT THE TIME OF PRINTING. HOWEVER, THE PUBLICATION DEALS WITH COMPLICATED TECHNICAL MATTERS SUITED ONLY FOR SPECIALISTS IN THE AREA, AND THE DESIGN OF THE SUBJECT-PRODUCTS IS SUBJECT TO REGULAR IMPROVEMENTS, MODIFICATIONS AND CHANGES. CONSEQUENTLY, THE PUBLISHER AND COPYRIGHT OWNER OF THIS PUBLICATION CAN NOT ACCEPT ANY RESPONSIBILITY OR LIABILITY FOR ANY EVENTUAL ERRORS OR OMISSIONS IN THIS BOOKLET OR FOR DISCREPANCIES ARISING FROM THE FEATURES OF ANY ACTUAL ITEM IN THE RESPECTIVE PRODUCT BEING DIFFERENT FROM THOSE SHOWN IN THIS PUBLICATION. THE PUBLISHER AND COPYRIGHT OWNER SHALL UNDER NO CIRCUMSTANCES BE HELD LIABLE FOR ANY FINANCIAL CONSEQUENTIAL DAMAGES OR OTHER LOSS, OR ANY OTHER DAMAGE OR INJURY, SUFFERED BY ANY PARTY MAKING USE OF THIS PUBLICATION OR THE INFORMATION CONTAINED HEREIN.

Winterthur Gas & Diesel Ltd.
Winterthur Gas & Diesel AG.
Winterthur Gas & Diesel S.A.

Schützenstrasse 3
PO Box 414, CH-8401
Winterthur, Switzerland

Tel. +41 (0)52 264 8844
Fax +41 (0)52 264 8866

www.wingd.com