Available executions

Execution No.	Material ID	Cylinder No.	Attribute 1: Turbocharger lubrication	
			INTERNAL	EXTERNAL
001	PTAA073719	5		X
002	PTAA073716	5	X	
003	PAAD381294	6		X
004	PAAD381293	6	X	
B 005	PTAA092190	7		X
B 006	PTAA092191	7	X	

NOTE
The above executions can be configured using the Engine Configurator.
Detailed guidance for the executions is provided within the Marine Installation Manual (MIM). If a specific execution of interest is not shown in the above table, then it may still be under development or not available. For further information or in case of a project-specific request, WinGD must be contacted directly.

This publication is designed to provide accurate and authoritative information with regard to the subject-matter covered as it was available at the time of printing. However, the publication deals with complicated technical matters suited only for specialists in the area, and the design of the subject-products is subject to regular improvements, modifications and changes. Consequently, the publisher and copyright owner of this publication cannot accept any responsibility or liability for any eventual errors or omissions in this document or for discrepancies arising from the features of any actual item in the respective product being different from those shown in this publication. The publisher and copyright owner shall under no circumstances be held liable for any financial consequential damages or other loss, or any other damage or injury, suffered by any party making use of this publication or the information contained herein.

Prod.: X52DF-S1.0, X52DF-S2.0

Change History

Rev.	Creator	Approver	Approval Date	Change ID	Change Synopsis	Activity Code	E	C
B	npa101				Master Drawing Updated			
A	mhu019	mhu019	12.01.2024	CNAA004297	Master Drawing update		4	3
–	sna102	mhu019	20.04.2023	CNAA003507	New Master Design		–	–

WIN GD Winterthur Gas & Diesel

LUBRICATING OIL SYSTEM

MIDS master drawing

separate BOM available

Scale –	NX	Dimension	
Units [mm] [kg]	Basic Material	Net Weight	0.001
Main Design	Design Group 9722	Q-Code X X M	Standard WDS
Qty per	A4	Item ID PTAA025688	Drawing Page/s 1/1

Copyright Winterthur Gas & Diesel Ltd. All rights reserved. By taking possession of the drawing the recipient recognizes and honours these rights. Neither the whole nor any part of this drawing may be used in any way for construction, fabrication, marketing or any other purpose nor copied in any way nor made accessible to third parties without the previous written consent of Winterthur Gas & Diesel Ltd.

SEQ NO	QTY	Item ID	Item Name / Dimension	Standard-ID	Basic Material	Net Weight
001	1	PAAD381283	LUBRICATING OIL SYSTEM			0.001
002	1	PAAD245338	LUBRICATING OIL SYSTEM FOR SEPARATED TC LUBRICATING			0
003	1	PTAA058055	LUBRICATING OIL DRAIN TANK			165
004	1	107.341.455	INSTRUCTION FOR FLUSHING			
005	1	PAAD178480	LUBRICATING OIL DRAIN TANK			0.001

Prod.			
	5 X52DF-S1.0 5 X52DF-S2.0		

Change History

Rev.	Creator	Approver	Approval Date	Change ID	Change Synopsis	Activity Code	E	C
-	sjo101	mhu019	11.01.2024	CNAA004215	New MainDesign introduced	-	-	

Approved

WIN GD
Winterthur Gas & Diesel

LUBRICATING OIL SYSTEM

Bill Of Material

Dimension

Copyright **Winterthur Gas & Diesel Ltd.** All rights reserved. By taking possession of the document the recipient recognizes and honours these rights. Neither the whole nor any part of this document may be used in any way for construction, fabrication, marketing or any other purpose nor copied in any way nor made accessible to third parties without the previous written consent of **Winterthur Gas & Diesel Ltd.**

Units	[m] [kg]	Basic Material		Net Weight	165
Main Design	Yes	Design Group	9722	Q-Code X X M	Standard WDS
Qty per	Engine	A4	Item ID PTAA073719	BOM Page/s	01/01

SEQ NO	QTY	Item ID	Item Name / Dimension	Standard-ID	Basic Material	Net Weight
001	1	PAAD381283	LUBRICATING OIL SYSTEM			0.001
002	1	PTAA058055	LUBRICATING OIL DRAIN TANK			165
003	1	107.341.455	INSTRUCTION FOR FLUSHING			
004	1	PAAD178480	LUBRICATING OIL DRAIN TANK			0.001

Prod.			
	5 X52DF-S1.0 5 X52DF-S2.0		

Change History

Rev.	Creator	Approver	Approval Date	Change ID	Change Synopsis	Activity Code	E	C
-	sjo101	mhu019	11.01.2024	CNAA004215	New MainDesign introduced	-	-	

Approved

WIN GD
Winterthur Gas & Diesel

LUBRICATING OIL SYSTEM

Bill Of Material

Dimension

Units	[m] [kg]	Basic Material			Net Weight	165
Main Design	Yes	Design Group	9722	Q-Code X X M	Standard	WDS
Qty per	Engine	A4	Item ID	PTAA073716	BOM Page/s	01/01

Copyright **Winterthur Gas & Diesel Ltd.** All rights reserved. By taking possession of the document the recipient recognizes and honours these rights. Neither the whole nor any part of this document may be used in any way for construction, fabrication, marketing or any other purpose nor copied in any way nor made accessible to third parties without the previous written consent of **Winterthur Gas & Diesel Ltd.**

SEQ NO	QTY	Item ID	Item Name / Dimension	Standard-ID	Basic Material	Net Weight
2	1	PAAD381283	LUBRICATING OIL SYSTEM without iCAT			0.001
3	1	PAAD245338	LUBRICATING OIL SYSTEM			0.001
5	1	PAAD381279	LUBRICATING OIL DRAIN TANK			165
6	1	107.341.455.500	INSTRUCTION FOR FLUSHING			0.001
7	1	PAAD178480	LUBRICATING OIL DRAIN TANK			0.001

Prod.				
	6 X52DF-S1.0 6 X52DF-S2.0			

Change History

Rev.	Creator	Approver	Approval Date	Change ID	Change Synopsis	Activity Code	E	C
-	dki021	mhu019	30.04.2021	EAAD787496	-		-	-

WIN GD
Winterthur Gas & Diesel

LUBRICATING OIL SYSTEM

PAAD249329

Bill Of Material

Dimension

Copyright **Winterthur Gas & Diesel Ltd.** All rights reserved. By taking possession of the document the recipient recognizes and honours these rights. Neither the whole nor any part of this document may be used in any way for construction, fabrication, marketing or any other purpose nor copied in any way nor made accessible to third parties without the previous written consent of **Winterthur Gas & Diesel Ltd.**

Units	[m] [kg]	Basic Material				Net Weight	165
Main Design	Yes	Design Group	9722	Q-Code	XXXXX	Standard	WDS
Qty per	Engine	A4	Item ID	PAAD381294		BOM Page/s	01/01

SEQ NO	QTY	Item ID	Item Name / Dimension	Standard-ID	Basic Material	Net Weight
001	1	PAAD381283	LUBRICATING OIL SYSTEM without iCAT			0.001
002	1	PAAD381279	LUBRICATING OIL DRAIN TANK			165
003	1	107.341.455.500	INSTRUCTION FOR FLUSHING			0.001
004	1	PAAD178480	LUBRICATING OIL DRAIN TANK			0.001

Prod.				
	6 X52DF-S1.0 6 X52DF-S2.0			

Change History

Rev.	Creator	Approver	Approval Date	Change ID	Change Synopsis	Activity Code	E	C
A	sna102	mhu019	22.11.2022	CNAA002784	Main Design/Drawing Introduced		4	3
-	dki021	mhu019	30.04.2021	EAAD787496	-		-	-

WIN GD
Winterthur Gas & Diesel

LUBRICATING OIL SYSTEM

Bill Of Material

Dimension

Copyright **Winterthur Gas & Diesel Ltd.** All rights reserved. By taking possession of the document the recipient recognizes and honours these rights. Neither the whole nor any part of this document may be used in any way for construction, fabrication, marketing or any other purpose nor copied in any way nor made accessible to third parties without the previous written consent of **Winterthur Gas & Diesel Ltd.**

Units	[m] [kg]	Basic Material				Net Weight	165
Main Design	Yes	Design Group	9722	Q-Code	XXXXX	Standard	WDS
Qty per	Engine	A4	Item ID	PAAD381293		BOM Page/s	01/01

SEQ NO	QTY	Item ID	Item Name / Dimension	Standard-ID	Basic Material	Net Weight
001	1	PAAD381283	LUBRICATING OIL SYSTEM			0.001
002	1	PTAA092291	LUBRICATING OIL DRAIN TANK			240
003	1	107.341.455	INSTRUCTION FOR FLUSHING			
004	1	PAAD178480	LUBRICATING OIL DRAIN TANK			0.001

Prod.	
	7 X52DF-S1.0 7 X52DF-S2.0

Change History

Rev.	Creator	Approver	Approval Date	Change ID	Change Synopsis	Activity Code	E	C
-	npa101	nmu019	06.05.2024	CMA005292	New MainDesign introduced	Approved	-	-

WIN GD
Winterthur Gas & Diesel

LUBRICATING OIL SYSTEM

7 cylinder, internal TC LO

Bill Of Material

Copyright **Winterthur Gas & Diesel Ltd.** All rights reserved. By taking possession of the document the recipient recognizes and honours these rights. Neither the whole nor any part of this document may be used in any way for construction, fabrication, marketing or any other purpose nor copied in any way nor made accessible to third parties without the previous written consent of **Winterthur Gas & Diesel Ltd.**

Dimension							7 cylinder, internal TC LO
Units	[m] [kg]	Basic Material				Net Weight	158
Main Design	Yes	Design Group	9722	Q-Code	X X M	Standard	WDS
Qty per	Engine	A4	Item ID	PTAA092191		BOM Page/s	01/01

SEQ NO	QTY	Item ID	Item Name / Dimension	Standard-ID	Basic Material	Net Weight
001	1	PAAD381283	LUBRICATING OIL SYSTEM			0.001
002	1	PAAD245338	LUBRICATING OIL SYSTEM FOR SEPARATED TC LUBRICATING			0
003	1	PTAA092291	LUBRICATING OIL DRAIN TANK			240
004	1	107.341.455	INSTRUCTION FOR FLUSHING			
005	1	PAAD178480	LUBRICATING OIL DRAIN TANK			0.001

Prod.								
	7 X52DF-S1.0 7 X52DF-S2.0							
Change History								
	-	npa101	nmu019	06.05.2024	CMA005292	New MainDesign introduced	-	-
	Rev.	Creator	Approver	Approval Date	Change ID	Change Synopsis / Approved / Activity Code	E	C

WIN GD
Winterthur Gas & Diesel

LUBRICATING OIL SYSTEM

7 cylinder, external TC LO

Bill Of Material

Copyright **Winterthur Gas & Diesel Ltd.** All rights reserved. By taking possession of the document the recipient recognizes and honours these rights. Neither the whole nor any part of this document may be used in any way for construction, fabrication, marketing or any other purpose nor copied in any way nor made accessible to third parties without the previous written consent of **Winterthur Gas & Diesel Ltd.**

Dimension	7 cylinder, external TC LO						
Units	[m] [kg]	Basic Material				Net Weight	158
Main Design	Yes	Design Group	9722	Q-Code	X X M	Standard	WDS
Qty per	Engine	A4	Item ID	PTAA092190		BOM Page/s	01/01

SEQ NO	QTY	Item ID	Item Name / Dimension	Standard-ID	Basic Material	Net Weight
16	1 m	PAAD308926	HEATING ELEMENT / 10QTVR2-CT			0.126

Prod.								
	X52DF-S1.0 X52DF-S2.0							

Change History

Rev.	Creator	Approver	Approval Date	Change ID	Change Synopsis	Activity Code	E	C
A	npa101	mhu019	10.07.2023	CMA003997	Drawing Updated		4	3
-	dki021	mhu019	30.04.2021	EAAD787496	-		-	-

Approved

WIN GD
Winterthur Gas & Diesel

LUBRICATING OIL SYSTEM

without iCAT

Bill Of Material

Dimension

Units [m] [kg]	Basic Material			Net Weight	0.001
Main Design	Design Group 9722	Q-Code X X M		Standard	WDS
Qty per	A4	Item ID	PAAD381283	BOM Page/s	01/01

Copyright **Winterthur Gas & Diesel Ltd.** All rights reserved. By taking possession of the document the recipient recognizes and honours these rights. Neither the whole nor any part of this document may be used in any way for construction, fabrication, marketing or any other purpose nor copied in any way nor made accessible to third parties without the previous written consent of **Winterthur Gas & Diesel Ltd.**

SPECIFICATION which must be met

34	OUTLET- Oil drain servo system, oil return from engine driving end - Free flow to lubricating oil drain tank.
35	OUTLET- Oil drain servo system, oil return from engine free end - Free flow to lubricating oil drain tank.
38	OUTLET - Oil drain supply unit - Free flow to lubricating oil drain tank.

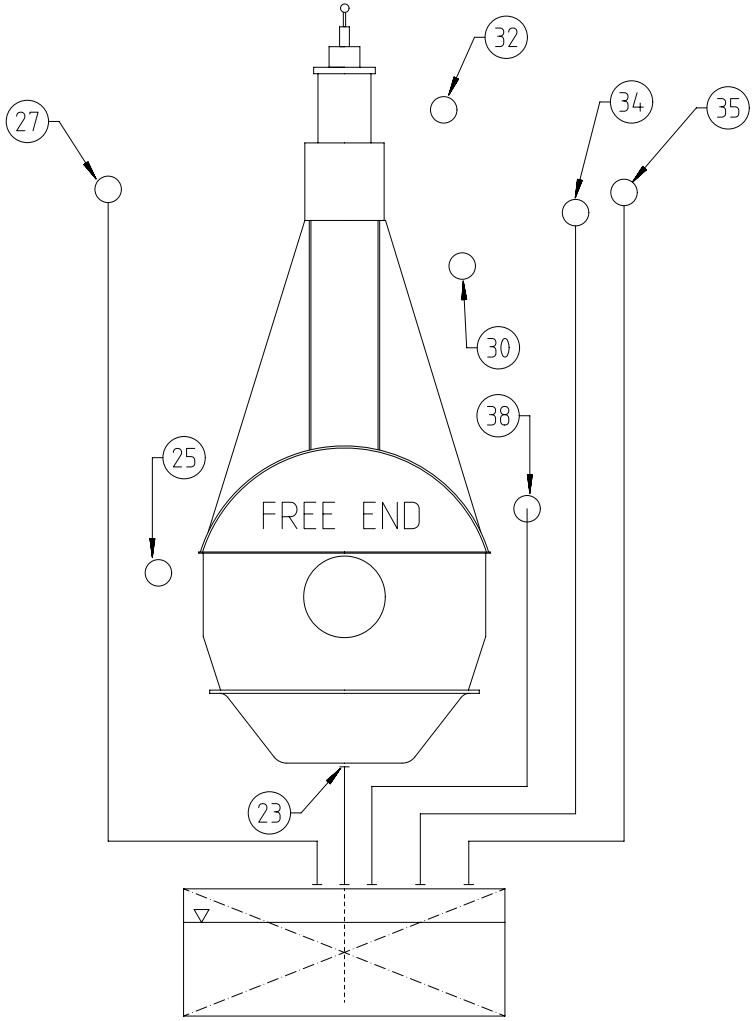

23	OUTLET - Lubricating oil from bedplate vertical oil drain - Drain to lubricating oil drain tank: Drain pipe position must within the permissible range as specified on the LO drain tank drawing Final position to be informed by the shipyard to the engine manufacturer.
25	INLET - Lubricating oil - Lubricating oil temperature: - Controller set-point: 45 °C (controller type: PI) - Steady state condition: 45 ± 2 °C - Transient condition: 45 ± 4 °C - Lubricating oil pressure: 4 - 5 bar *) *) An active pressure control device is needed, which could be either a bypass via pressure control valve or frequency controlled pumps, working with a closed loop control circle. - Lubricating oil volume flow: according to GTD - LO amount on engine side: mentioned in table 1 on page 2 - Lubricating oil cleanliness: - Full flow filtered by 35 micron filter (absolute, sphere passing mesh). - Bypass cleaning of lubricating oil in drain tank by self-cleaning centrifugal separator.
27	OUTLET - Lubricating oil turbocharger - Must be not connected to other oil return lines. - Pipe outlet above the oil level in the LO drain tank or a drain pipe with venting holes above the max. oil level to be installed. - Connected to the lubricating oil drain tank, opposite to the main lubricating oil pump, i.e. - on tank's forward end if main lubricating oil pump suction is on tank's aft end. - on tank's aft end if main lubricating oil pump suction is on tank's forward end. - on tank's forward or aft end if main lubricating oil pump suction is in middle of tank.
30	INLET - Crosshead Lubricating oil - Lubricating oil temperature: - Controller set-point: 45 °C (controller type: PI) - Steady state condition: 45 ± 2 °C - Transient condition: 45 ± 4 °C - Lubricating oil pressure: 10 - 13 bar *) *) An active pressure control device is needed, which could be either a bypass via pressure control valve or frequency controlled pumps, working with a closed loop control circle. - Lubricating oil volume flow: according to GTD - Lubricating oil cleanliness: - Full flow filtered by 35 micron filter (absolute, sphere passing mesh). - Bypass cleaning of lubricating oil in drain tank by self-cleaning centrifugal separator.
32 A	INLET - Cylinder lubricating oil - Cylinder lubricating oil temperature: 40^{+10}_{-5} °C - Trace heating has to be applied in the cylinder LO feed line on system side - Cylinder lubricating oil static pressure: min. 0.43 bar

Prod.	X52DF-S1.0 X52DF-S2.0							
Change History								
A	npa101	mhu019	10.07.2023	CNAA003997	Drawing Updated		4	3
-	dki021	mhu019	30.04.2021	EAAD787496	-		-	-
Rev.	Creator	Approver	Approval Date	Change ID	Change Synopsis	Approved / Activity Code	E	C

WIN GD Winterthur Gas & Diesel

LUBRICATING OIL SYSTEM
without iCAT

separate BOM available

Dimension

Scale - NX | Units [mm] [kg] | Basic Material | Net Weight 0.001

SURFACE PROTECTION SEE GROUP 0344
TOLERANCING PRINCIPLE ISO8015
GENERAL TOLERANCES ACCORDING TO ISO2768-mK

Copyright Winterthur Gas & Diesel Ltd. All rights reserved. By taking possession of the drawing the recipient recognizes and honours these rights. Neither the whole nor any part of this drawing may be used in any way for construction, fabrication, marketing or any other purpose nor copied in any way nor made accessible to third parties without the previous written consent of Winterthur Gas & Diesel Ltd.

Main Design	Design Group 9722	Q-Code X X M	Standard WDS		
Qty per	A2	Item ID PAAD381283	Drawing Page/s 1/3		

SYSTEM PROPOSAL - System oil and cylinder LO supply

Pos.	ENGINE COMPONENTS *3)
EC01	Supply unit
EC02	Trace heating cable control box

Pos.	ENGINE CONNECTIONS *2)
23	OUTLET - Lubricating oil from bedplate vertical oil drain
25	INLET - Lubricating oil
27	OUTLET - Lubricating oil turbocharger *12) *13)
30	INLET - Crosshead lubricating oil
32	INLET - Cylinder lubricating oil
34	OUTLET - Oil drain servo system, oil return from engine driving end
35	OUTLET - Oil drain servo system, oil return from engine free end
38	OUTLET - Oil drain supply unit
E1	Trace heating cable control box connection

Pos.	SYSTEM COMPONENTS *1)
001	Lubricating oil drain tank
002	Heating device *4)
003	Suction strainer (mesh size acc. to pump suppliers recommendation)
004	Lubricating oil pump
005	Lubricating oil cooler
006	Autom. temperature control valve, constant temp. at engine inlet: 45°C
007	Automatic self-cleaning filter, 35 micron, with backflushing oil treatment
008	Transition piece (adaptor) *9)
009	Deck connection
010	Grade1 Cylinder lubricating oil storage tank *5)
011	Grade1 Cylinder lubricating oil service tank *5)
012	Pressure regulating valve *6)
015	Crosshead lubricating oil pump *8)
016	Electrical trace heating cable (detailed spec. is linked on page 1)
017	Three-way valve, manually or remotely operated
018	Grade2 Cylinder lubricating oil storage tank *5) *18)
019	Grade2 Cylinder lubricating oil service tank *5) *18)

Number of cylinders			5	6	7	8
X52DF-S1.0 R1 rated	power	(kW)	7500	9000	10500	12000
	speed	(rpm)	120			
LO drain tank		(m^3)	For capacities refer to drawing "LO drain tank-Filling Guideline"			
Main LO pump	capacity	(m^3/h)	refer to GTD			
Crosshead LO pump	capacity					
Cyl. LO storage tank	capacity	(m^3)	based on a feed rate of 1g/kWh (pulse)			
Cyl. LO service tank *14)	capacity	(m^3)	0.4	0.5	0.6	0.6
Proposal for pipe dimensioning *10)						
Norminal pipe diameter	A	DN	200	250	250	250
	B	DN	200	200	200	200
	C	DN	100	100	125	125
	D	DN	80	80	100	100
	E	DN	150	200	200	200
	F	DN	25	25	25	25
	G	The pipe diameters for LO separator are sized acc. to the effective throughput capacity of the separator and according to the separator manufacturer's recommendations.				
	H					
	K	DN	32	32	32	40
	L	DN	80	100	100	100
	M	DN	65	65	65	65
	N	DN	50	50	50	50
	O	DN	65	65	65	65
	P1	DN	65	65	80	80
	P2	DN	80	80	80	80

Table 1: LO content on engine side

Cylinder	Volume
5	1455 l
6	1665 l
7	1873 l
8	2029 l

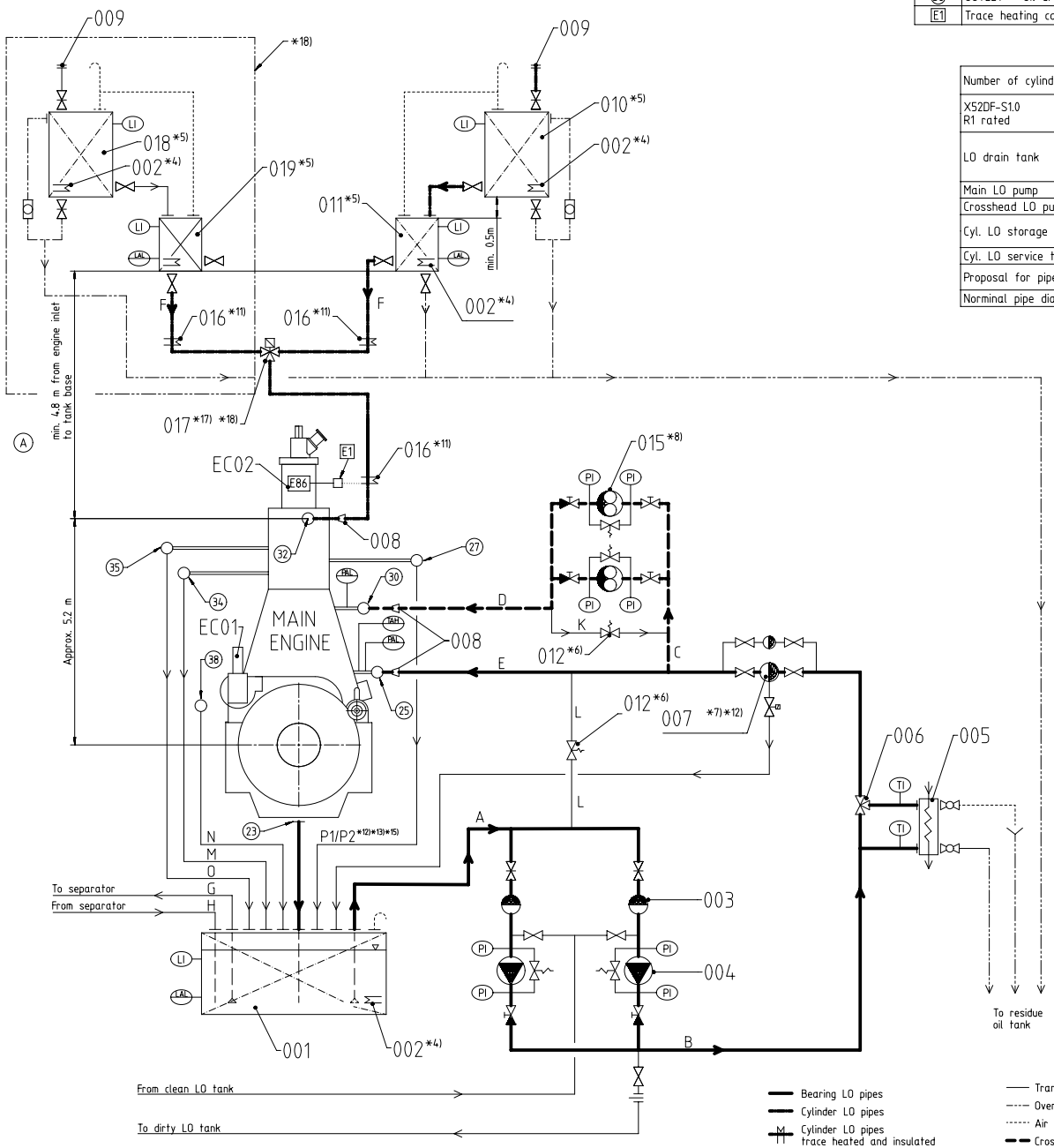

Bearing LO pipes
Cylinder LO pipes
Cylinder LO pipes trace heated and insulated
Pipes on engine
Transfer/dirty LO pipes
Overflow/drain pipes
Air vent pipes
Crosshead LO pipes
Pipe connections to the engine
Electrical interface connections

Remarks:

- Air vent pipes and drain valves where necessary.
- Air vent and drain pipes must be fully functional at all inclination angles of the ship at which the engine must be operational.

*1) To be delivered by external supplier and to be installed by the shipyard.

*2) Concerning the exact position and execution of the pipe connection please refer to the pipe connection plan.

*3) To be delivered by the engine manufacturer, i.e. already equipped on engine side.

*4) Optional heating coil

*5) The cylinder LO service tank with metering device provides the possibility to supervise the cylinder LO consumption of the engine. Alternatively a flowmeter can be installed. If the cylinder LO service tank is omitted, i.e. the engine is fed directly from the cylinder LO storage tank, the storage tank has to be located at the same minimum installation height as specified for the service tank, respectively a certain level higher if additional elements are installed in the supply line to the engine (e.g. a flowmeter) to compensate the pressure drop created.

*6) The bypass line with pressure regulating valve can be omitted if one of the following conditions is fulfilled:
- The pump speed is adjusted according to the required pressure at engine inlet, e.g. by a frequency confroller
- The pumps have built-in pressure regulating valves
  The pump built-in safety valve is in any case mandatory and not to be used for pressure regulation (pure safety function).

*7) If the back-flushing process is driven by compressed air and the back-flushing oil is returned to the LO drain tank the oil outlet must be above the max. oil level or as an alternative a drain pipe with venting holes above the max. oil level needs to be installed to avoid back-flushing air blowing into the oil. Back-flushing oil must be treated.

*8) The LO pumps (pos. 004) and the crosshead LO pumps (pos. 015) are to be interlocked. The crosshead LO are not to be opperated without the LO pumps.

*9) To be installed as required (check with Pipe Connection PLan")

*10) All capacities and the given diameters are valid for the mentioned rating (including integrated turbocharger lubrication, but excluding any possibly installed damper and PTO gears) and serve just as an example. To make the layout for the project specific rating please refer to DG9730 "Fluid velocities and flow rates, recommended values for pipework of diesel plants" for selecting the appropriate pipe diameter. Rating specific flow rates are provided by GTD.

*11) To be connected to the control box (EC02) on engine side.

*12) The oil return pipe must not be connected to other drain pipes. If the oil is returned to the LO drain tank it is recommended to connect the oil outlet
- as close as possible to the separator suction pipe
- opposite to the main LO pump, i.e.
  - on tanks' forward end if the main LO pump is on tanks' aft end
  - on tanks' aft end if the main LO pump is on tanks' forward end
  - on tanks' forward or aft end if the main LO pump is in the middle of the tank.

*13) The oil outlet in the LO drain tank must be above the max. oil level or as an alternative a drain pipe with venting holes above the max. oil level needs to be installed.

*14) The proposed cylinder LO services tank capacity takes into account a filling interval of 2 days based on the above mentioned feed rate.

*15) The pipe diameter varies depending on the installed TC type. Project-specific values are provided in the relevant pipe connection plan of DG8020.
As rough guidance please observe the following values:
P1: Pipe diameter for engines equipped with ABB turbocharger
P2: Pipe diameter for engines equipped with MHI turbocharger

*17) Three-way valve has to be fitted as close as possible to the engine inlet. This is to reduce the volume of remaining oil (with the previous BN) after the change-over.

*18) Optional, only to be installed if two different cylinder lubrication oil grades instead of a single grade cylinder lubricating oil is selected (e.g. for commercial reasons).

Rev.	Creator	Approver	Approved Date	Change ID	Change Synopsis	Activity Code		
A	npa101	mhu019	10.07.2023	CNMA003997	Drawing Updated	Approved	4	3

SURFACE PROTECTION SEE GROUP 0344
TOLERANCING PRINCIPLE ISO8015
GENERAL TOLERANCES ACCORDING TO ISO2768-mK

[mm] [kg] – NX A1 Item ID PAAD381283 Drawing Pages 2/3

Copyright Wärtsilä Gas & Diesel Inc. All rights reserved. By taking possession of or opening the mount integrated tool holders these rights, neither the tools nor any part of this drawing may be used in any way for construction, fabrication, marketing or any other purpose nor copied in any way nor made accessible to third parties without the previous written consent of Wärtsilä Gas & Diesel Ltd.

SYSTEM PROPOSAL - LO treatment system

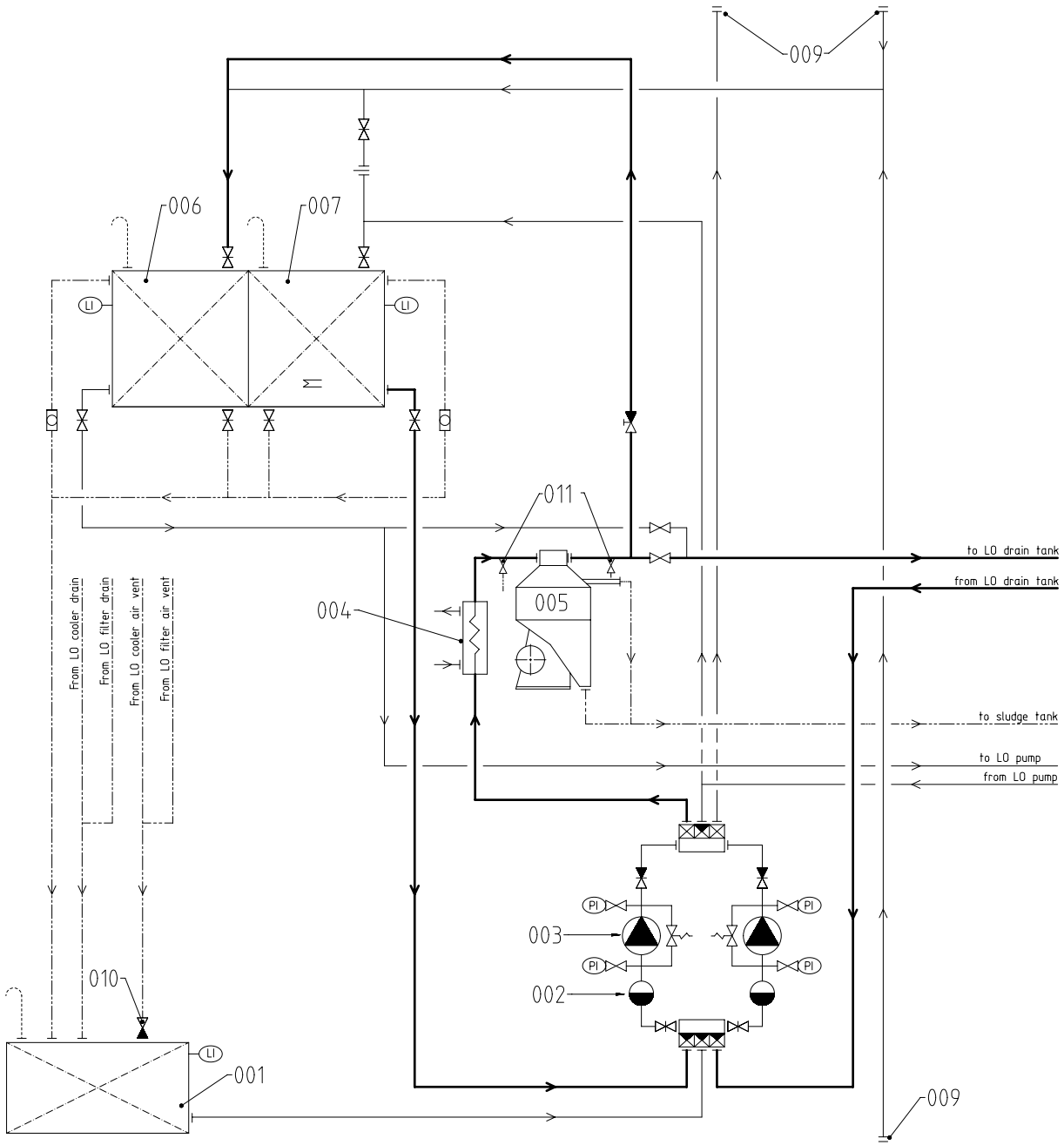

Pos.	SYSTEM COMPONENTS *1)
001	Residue oil tank
002	Suction strainer (mesh size acc. to pump suppliers recommendation)
003	Lubricating oil pump — one for transfer and separator service; one for separator service
004	Lubricating oil heater with relief valve and temperature control
005	Self-cleaning centrifugal separator
006	Clean lubricating oil tank
007	Dirty lubricating oil tank
009	Deck connection
010	Float non-return valve
011	LO sampling cock

X62DF-S1.0		Number of cylinders			
		5	6	7	8
Clean LO tank volume	(m^3)	equal or bigger than LO drain tank volume			
Dirty LO tank volume	(m^3)	equal or bigger than LO drain tank volume			
LO separator min. capacity	(l/h)	1020	1230	1430	1640
Residue oil tank volume	(m^3)	Depending on ship's requirements			

Remark:

- Air vents and drain valves where necessary
- Air vent and drain pipes must be fully functional at all inclination angles of the ship at which the engine must be operational (check Class rules)
- Pipe diameters to be designed according to shipyards' practice and component suppliers' recommendation

*1) To be delivered by external supplier and to be installed by the shipyard.

Main separating piping
Transfer / dirty LO pipes
Overflow / drain pipes
Air vent pipes

SURFACE PROTECTION SEE GROUP 0344
TOLERANCING PRINCIPLE ISO8015
GENERAL TOLERANCES ACCORDING TO ISO2768-mK

Rev.	Creator	Approver	Approved Date	Change ID	Change Synopsis	Activity Code	E	C
A	npa101	nhu019	10.07.2023	CNAA003997	Drawing Updated		4	3

Approved

[mm] [kg] – NX A1 Item ID PAAD381283 Drawing Pages 3/3

Copyright Wärtsilä Oyj Abp © All rights reserved. By taking possession of this drawing, the recipient recognizes such owners. Never copy, distribute or use any part of this drawing may be used in any way for construction, fabrication, marketing or any other purpose nor copied in any way nor made accessible to third parties without the previous written consent of Wärtsilä Oyj Abp.

SEQ NO	QTY	Item ID	Item Name / Dimension	Standard-ID	Basic Material	Net Weight
001	1	107.246.799.200	PLATE			15
002	2	PAAD381278	VERTICAL OIL DRAIN			75

Prod.								
	X52-S2.0 X52DF-S1.0	X52DF-S2.0						

Change History

Rev.	Creator	Approver	Approval Date	Change ID	Change Synopsis	Activity Code	E	C
A	sjo101	mhu019	10.11.2023	CNAA004295	Drawing updated		4	3
-	npa101	mhu019	05.04.2023	CNAA003511	new Design		-	-

Approved

WIN GD
Winterthur Gas & Diesel

LUBRICATING OIL DRAIN TANK

FOR STANDARD ENGINE SEATING

Bill Of Material

Dimension

Copyright **Winterthur Gas & Diesel Ltd.** All rights reserved. By taking possession of the document the recipient recognizes and honours these rights. Neither the whole nor any part of this document may be used in any way for construction, fabrication, marketing or any other purpose nor copied in any way nor made accessible to third parties without the previous written consent of **Winterthur Gas & Diesel Ltd.**

Units [m] [kg]	Basic Material			Net Weight	165
Main Design	Design Group 9722	Q-Code X X M		Standard	WDS
Qty per	A4	Item ID	PTAA058055	BOM Page/s	01/01

TANK PROPOSAL

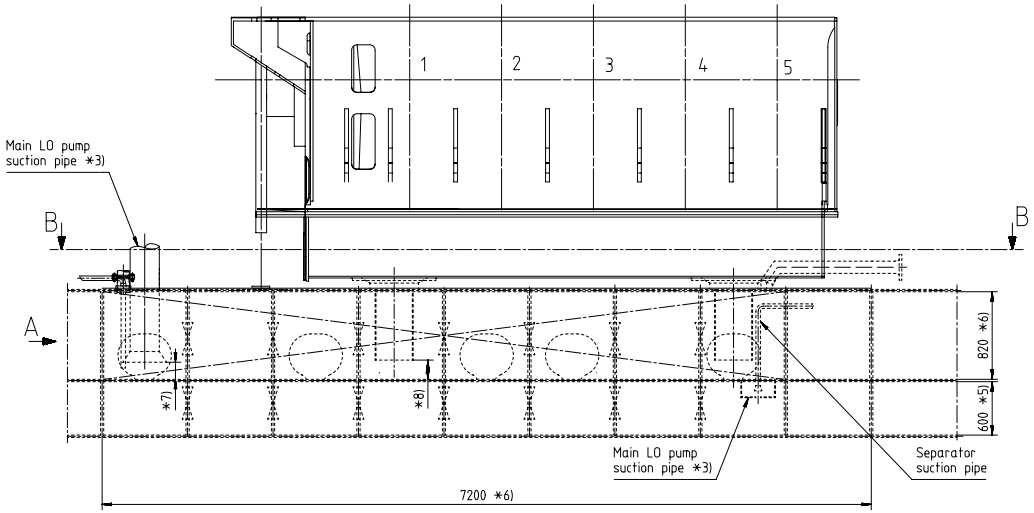

A (DRIVING END)

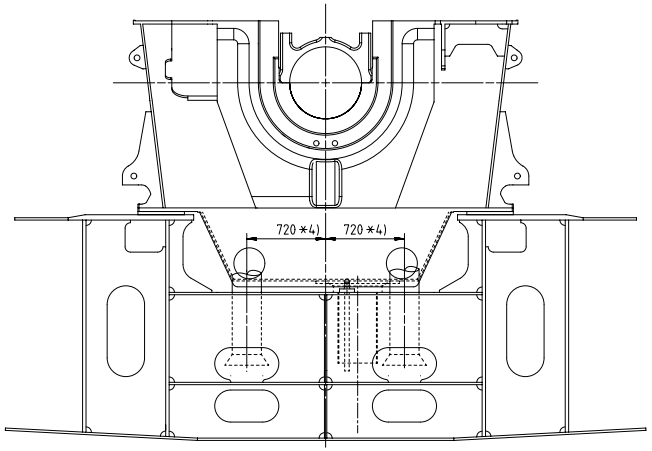

B-B

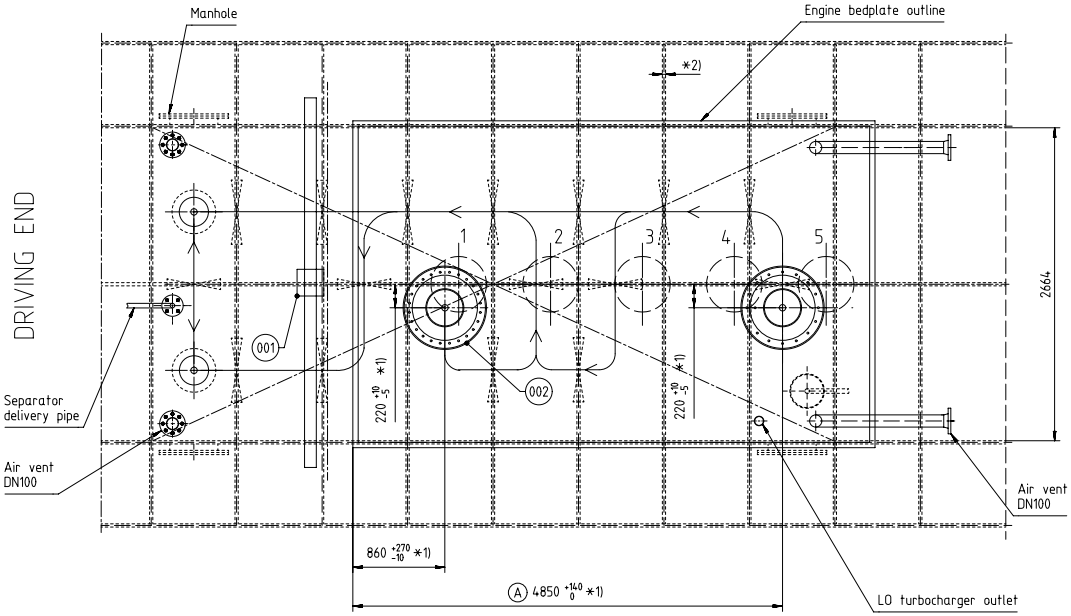

REMARKS:

*1) Drains must be arranged by the shipyard in accordance with the shiphull structure and within the specified tolerance range. As soon as the final positions are determined the engine manufacturer must be informed so that the bedplate (oil pan) holes can be machined in compliance with the engine builder drawing "BEDPLATE OIL DRAIN" (DG1110).

*2) Recommendation regarding plate thickness is given in the Marine Installation Drawing Set (MIDS) "ENGINE / SEATING FOUNDATION" (foundation arrangement drawing, DG9710).

*3) Recommendation regarding the pipe size is given in the system proposal as provided in the MIDS "LUBRICATING OIL SYSTEM" (LO system drawing, DG9722).

*4) Final position depends on the size of the flywheel casing and required space for the main LO pump.

*5) Final height must be in accordance with the rules of the relevant classification society.

*6 Proposal, final tank dimensions are to be determined by the shipyard in accordance with the shiphull structure, minimum required filling / circulation volume, pump suction requirements and rules of the relevant classification society. Requirements / design criteria for the tank layout are provided in the MIDS "LUBRICATING OIL DRAIN TANK - Filling Guidelines" (DG9722).

*7) Distance according to pump makers specification.

*8) The drain pipe outlet must be below the min. LO level (LO low level alarm height) though a gap of min. half of the drain pipe diameter (min. 1/2*DN) to the drain tank bottom has to be maintained.

Proj.	X52-S2.0									
Change History	A	sjo101	mhu019	10.11.2023	CNAA004235	Drawing updated			4	3
	-	npa101	mhu019	05.04.2023	CNAA003511	new Design			-	-
	Rev.	Creator	Approver	Approval Date	Change ID	Change Synopsis		Activity Code	E	C

Approved

WIN GD Winterthur Gas & Diesel

LUBRICATING OIL DRAIN TANK
FOR STANDARD ENGINE SEATING

separate BOM available

Dimension

Scale 1:25 | NX | Units [mm] [kg] | Basic Material | Net Weight 165.0

SURFACE PROTECTION SEE GROUP 0344
TOLERANCING PRINCIPLE ISO8015
GENERAL TOLERANCES ACCORDING TO ISO2768-mK

Copyright Winterthur Gas & Diesel Ltd. All rights reserved. By taking possession of the drawing the recipient recognizes and honours these rights. Neither the whole nor any part of this drawing may be used in any way for construction, fabrication, marketing or any other purpose nor copied in any way nor made accessible to third parties without the previous written consent of Winterthur Gas & Diesel Ltd.

Main Design	Design Group	9722	Q-Code	X X M	Standard	WDS
Qty per	A1	Item ID	PTAA058055		Drawing Page/s	1/1

SEQ NO	QTY	Item ID	Item Name / Dimension	Standard-ID	Basic Material	Net Weight
001	1	107.246.799.200	PLATE			15
002	2	PAAD381278	VERTICAL OIL DRAIN			75

Prod.								
	X52-S2.0 X52DF-S1.0	X52DF-S2.0						

Change History

Rev.	Creator	Approver	Approval Date	Change ID	Change Synopsis	Activity Code	E	C
B	sjo101	mhu019	10.11.2023	CNAA004295	Drawing updated		4	3
A	sde101	mhu019	19.01.2022	CNAA001373	drawing updated		4	3
-	dki021	mhu019	30.04.2021	EAAD787496	-		-	-

Approved

WIN GD
Winterthur Gas & Diesel

LUBRICATING OIL DRAIN TANK

FOR STANDARD ENGINE SEATING

Bill Of Material

Dimension

Copyright **Winterthur Gas & Diesel Ltd.** All rights reserved. By taking possession of the document the recipient recognizes and honours these rights. Neither the whole nor any part of this document may be used in any way for construction, fabrication, marketing or any other purpose nor copied in any way nor made accessible to third parties without the previous written consent of **Winterthur Gas & Diesel Ltd.**

Units [m] [kg]	Basic Material			Net Weight	165
Main Design	Design Group 9722	Q-Code X X M		Standard	WDS
Qty per	A4	Item ID	PAAD381279	BOM Page/s	01/01

TANK PROPOSAL

6X52-S2.0/52DF-S1.0

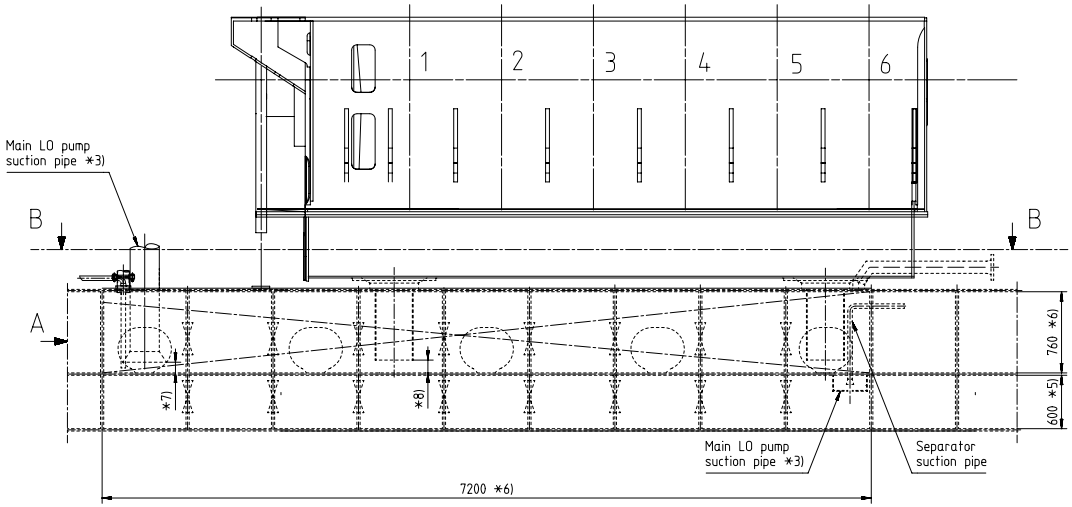

A (DRIVING END)

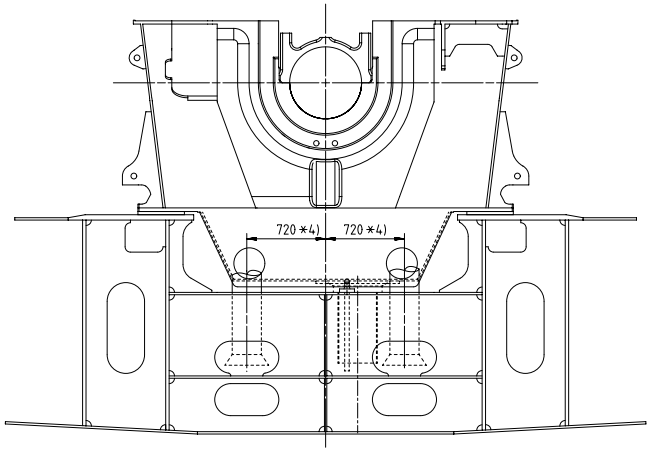

B-B

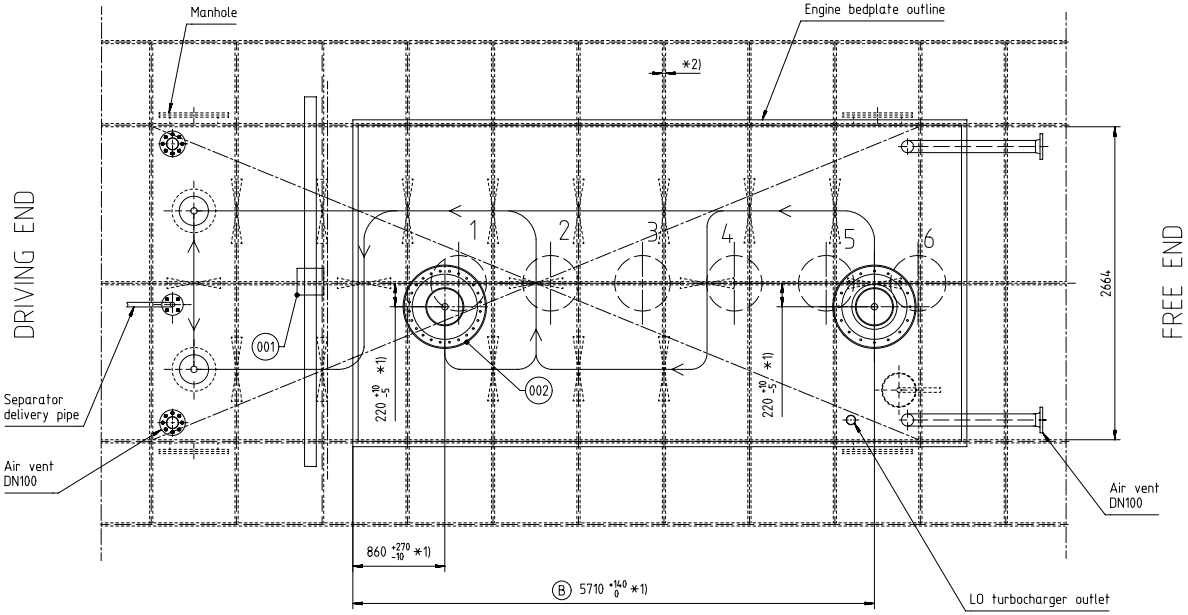

REMARKS:

*1) Drains must be arranged by the shipyard in accordance with the shiphull structure and within the specified tolerance range. As soon as the final positions are determined the engine manufacturer must be informed so that the bedplate (oil pan) holes can be machined in compliance with the engine builder drawing "BEDPLATE OIL DRAIN" (DG1110).

*2) Recommendation regarding plate thickness is given in the Marine Installation Drawing Set (MIDS) "ENGINE / SEATING FOUNDATION" (foundation arrangement drawing, DG9710).

*3) Recommendation regarding the pipe size is given in the system proposal as provided in the MIDS "LUBRICATING OIL SYSTEM" (LO system drawing, DG9722).

*4) Final position depends on the size of the flywheel casing and required space for the main LO pump.

*5) Final height must be in accordance with the rules of the relevant classification society.

*6 Proposal, final tank dimensions are to be determined by the shipyard in accordance with the shiphull structure, minimum required filling / circulation volume, pump suction requirements and rules of the relevant classification society. Requirements / design criteria for the tank layout are provided in the MIDS "LUBRICATING OIL DRAIN TANK - Filling Guidelines" (DG9722).

*7) Distance according to pump makers specification.

*8) The drain pipe outlet must be below the min. LO level (LO low level alarm height) though a gap of min. half of the drain pipe diameter (min. 1/2*DN) to the drain tank bottom has to be maintained.

Proj.	X52-S2.0 X52DF-S1.0	X52DF-S2.0							
Change History	B	sjo101	mhu019	10.11.2023	CNAA004295	Drawing updated		4	3
	A	sde101	mhu019	19.01.2022	CNAA001373	drawing updated		4	3
	-	dki021	mhu019	30.04.2021	EAAD7874496	-		-	-
	Rev.	Creator	Approver	Approval Date	Change ID	Change Synopsis	Activity Code	E	C

WIN GD Winterthur Gas & Diesel

LUBRICATING OIL DRAIN TANK
FOR STANDARD ENGINE SEATING

separate BOM available

Dimension

Scale 1:25	NX	Units [mm] [kg]	Basic Material			Net Weight	165.0
Main Design		Design Group	9722	Q-Code X X M		Standard	WDS
Qty per		A1	Item ID	PAAD381279		Drawing Page/s	1/1

SURFACE PROTECTION SEE GROUP 0344
TOLERANCING PRINCIPLE ISO8015
GENERAL TOLERANCES ACCORDING TO ISO2768-mK

Copyright Winterthur Gas & Diesel Ltd. All rights reserved. By taking possession of the drawing the recipient recognizes and honours these rights. Neither the whole nor any part of this drawing may be used in any way for construction, fabrication, marketing or any other purpose nor copied in any way nor made accessible to third parties without the previous written consent of Winterthur Gas & Diesel Ltd.

SEQ NO	QTY	Item ID	Item Name / Dimension	Standard-ID	Basic Material	Net Weight
001	1	107.246.799.200	PLATE			15
002	3	PAAD381278	VERTICAL OIL DRAIN			75

Prod.									
	X52-S2.0 X52DF-A-S1.0		X52DF-M-S1.0 X52DF-S1.0		X52DF-S2.0				

Change History

Rev.	Creator	Approver	Approval Date	Change ID	Change Synopsis	Activity Code	E	C
-	npa101	nhu019	06.05.2024	CNAA005292	new Design		-	-

Approved

WIN GD
Winterthur Gas & Diesel

LUBRICATING OIL DRAIN TANK

FOR STANDARD ENGINE SEATING

Bill Of Material

Dimension

Units	[m] [kg]	Basic Material		Net Weight	240
Main Design		Design Group	9722 Q-Code X X M	Standard	WDS
Qty per	A4	Item ID	PTAA092291	BOM Page/s	01/01

Copyright **Winterthur Gas & Diesel Ltd.** All rights reserved. By taking possession of the document the recipient recognizes and honours these rights. Neither the whole nor any part of this document may be used in any way for construction, fabrication, marketing or any other purpose nor copied in any way nor made accessible to third parties without the previous written consent of **Winterthur Gas & Diesel Ltd.**

TANK PROPOSAL

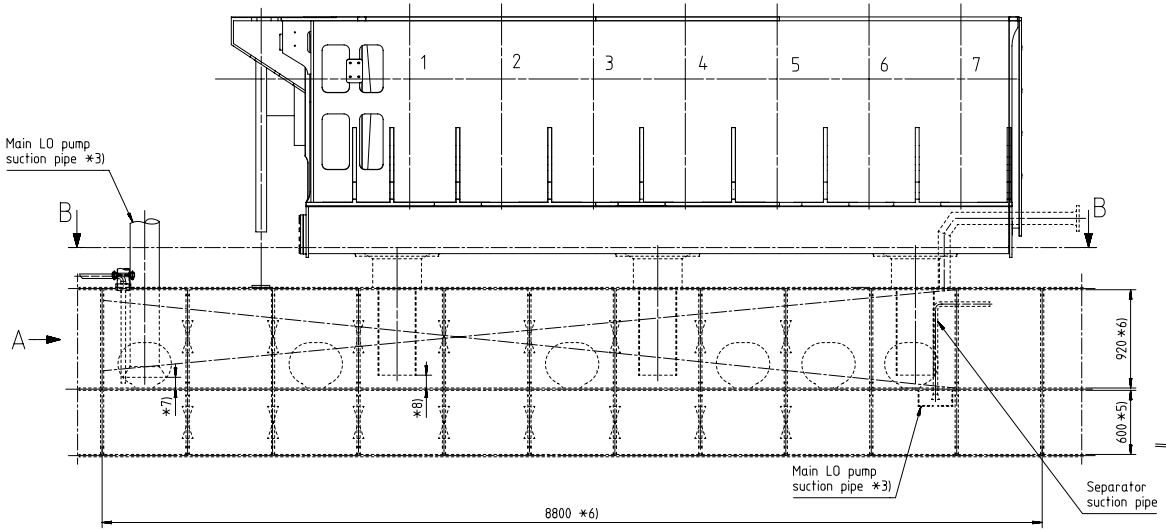

A (DRIVING END)

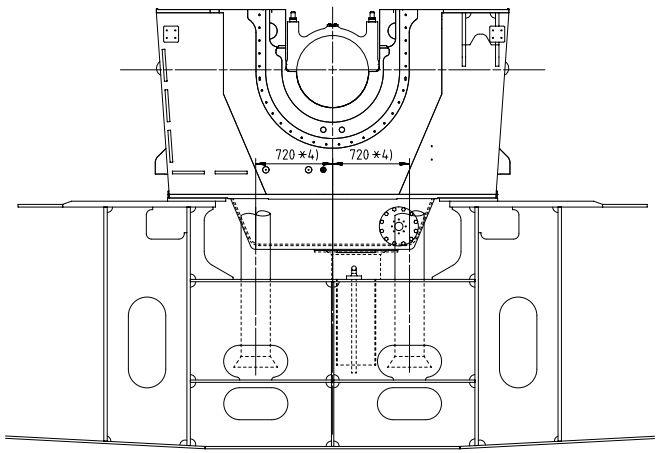

B-B

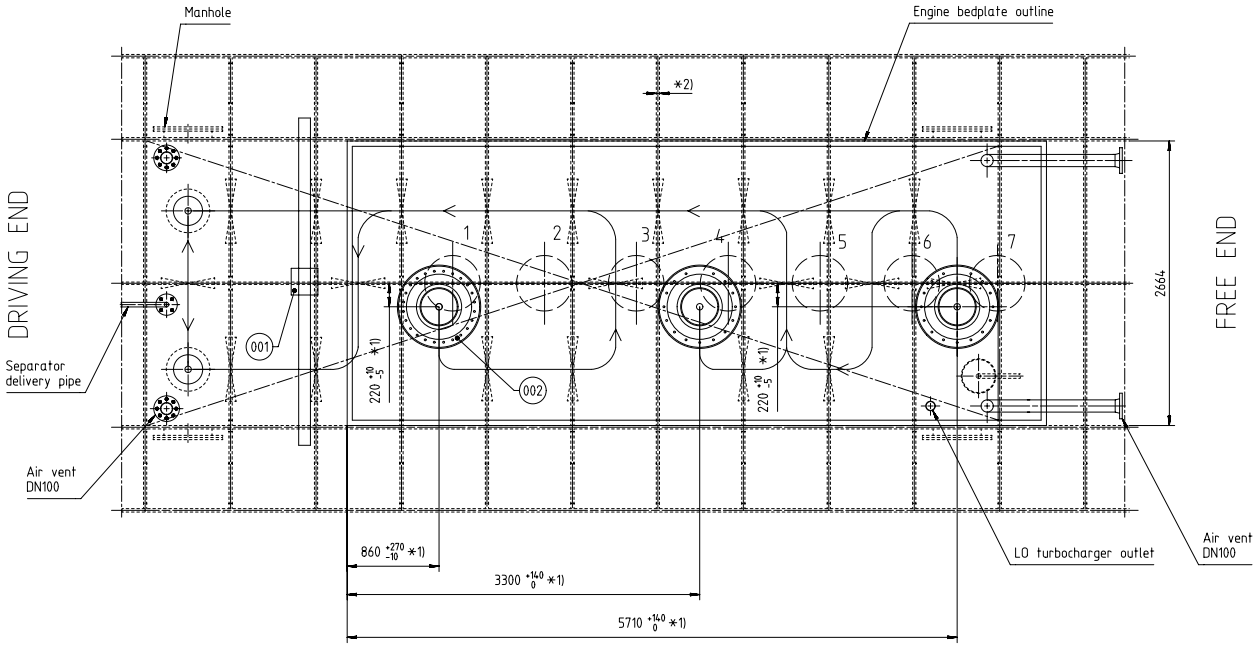

REMARKS:

*1) Drains must be arranged by the shipyard in accordance with the shiphull structure and within the specified tolerance range. As soon as the final positions are determined the engine manufacturer must be informed so that the bedplate (oil pan) holes can be machined in compliance with the engine builder drawing "BEDPLATE OIL DRAIN" (DG1110).

*2) Recommendation regarding plate thickness is given in the Marine Installation Drawing Set (MIDS) "ENGINE / SEATING FOUNDATION" (foundation arrangement drawing, DG9710).

*3) Recommendation regarding the pipe size is given in the system proposal as provided in the MIDS "LUBRICATING OIL SYSTEM" (LO system drawing, DG9722).

*4) Final position depends on the size of the flywheel casing and required space for the main LO pump.

*5) Final height must be in accordance with the rules of the relevant classification society.

*6 Proposal, final tank dimensions are to be determined by the shipyard in accordance with the shiphull structure, minimum required filling / circulation volume, pump suction requirements and rules of the relevant classification society. Requirements / design criteria for the tank layout are provided in the MIDS "LUBRICATING OIL DRAIN TANK - Filling Guidelines" (DG9722).

*7) Distance according to pump makers specification.

*8) The drain pipe outlet must be below the min. LO level (LO low level alarm height) though a gap of min. half of the drain pipe diameter (min. 1/2*DN) to the drain tank bottom has to be maintained.

Proj.	X52-S2.0 X52DF-A-S1.0	X52DF-M-S1.0 X52DF-S1.0	X52DF-S2.0

Change History

Rev.	Creator	Approver	Approval Date	Change ID	Change Synopsis	Activity Code	E	C
-	npa101	mhu019	06052024	CNA000292	new Design		-	-

Approved

WIN GD Winterthur Gas & Diesel

LUBRICATING OIL DRAIN TANK
FOR STANDARD ENGINE SEATING

separate BOM available

Dimension

Scale 1:25	NX	Units [mm] [kg]	Basic Material	Net Weight	240.0
Main Design	Design Group 9722	Q-Code X X M	Standard	WDS	
Qty per	A1	Item ID PTAA092291	Drawing Page/s	1/1	

SURFACE PROTECTION SEE GROUP 0344
TOLERANCING PRINCIPLE ISO8015
GENERAL TOLERANCES ACCORDING TO ISO2768-mK

Copyright Winterthur Gas & Diesel Ltd. All rights reserved. By taking possession of the drawing the recipient recognizes and honours these rights. Neither the whole nor any part of this drawing may be used in any way for construction, fabrication, marketing or any other purpose nor copied in any way nor made accessible to third parties without the previous written consent of Winterthur Gas & Diesel Ltd.

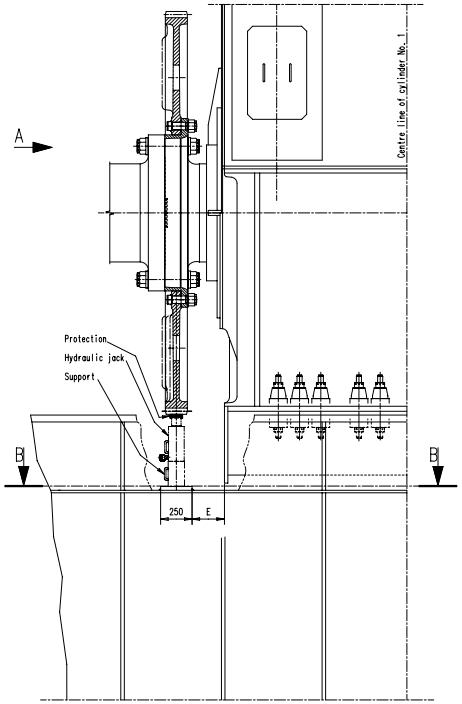

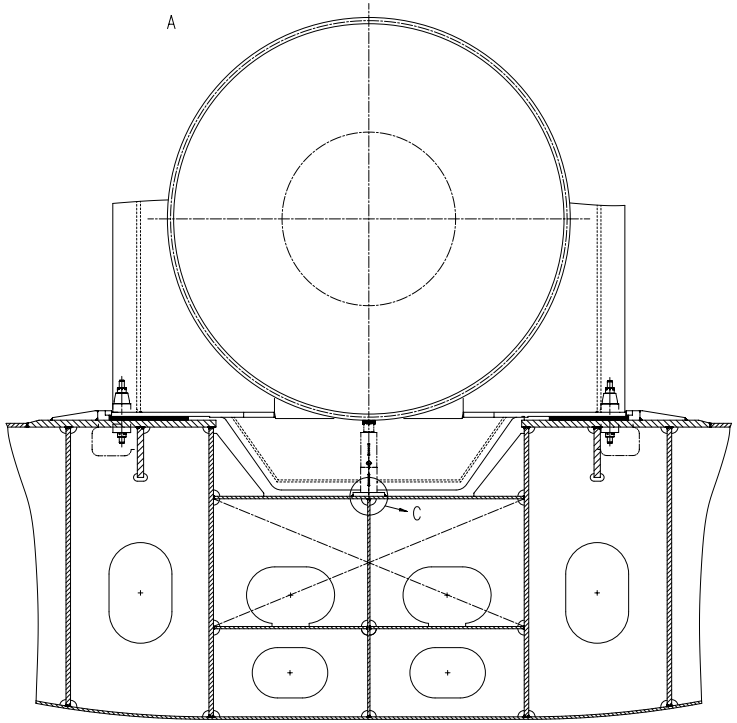

①

ENGINE TYPE	D	E approx.
RT-flex50-D/DF	1387	165
X82-B	2395	460
X35-B	1015	124
X40-B	1170	172
X52/X52DF/X52DF-1.0/X52DF-2.1	1630	325
X62-B/X62DF/X62DF-1.1/X62DF-2.1	1888	343
X72-B/X72DF/X72DF-1.1&1.2/X72DF-2.1&2.2	2131	370
X82-2.0/X82DF-1.0	2395	460
X92-B/-X92DF	2677	334

B-B

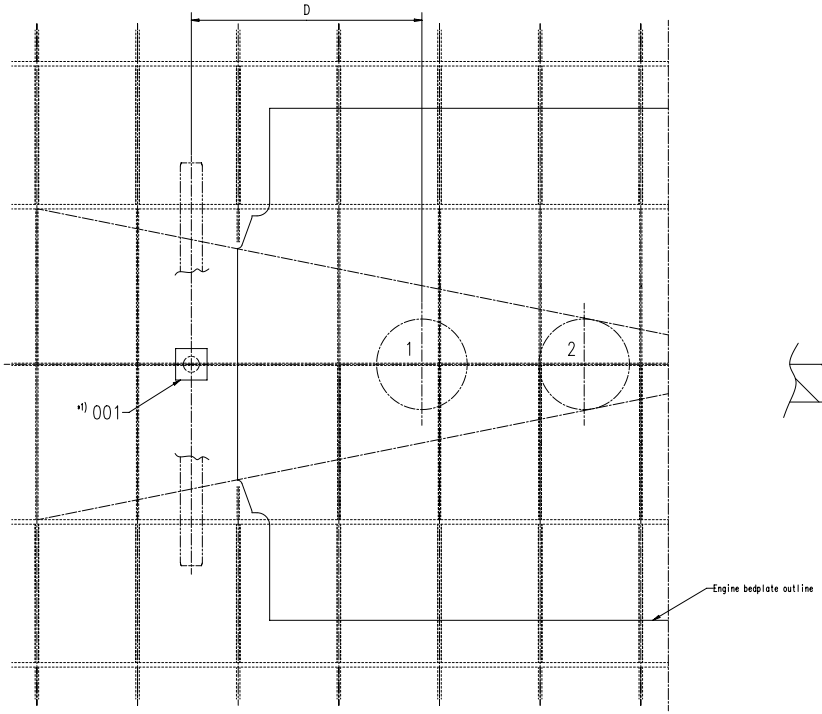

C 1 : 5

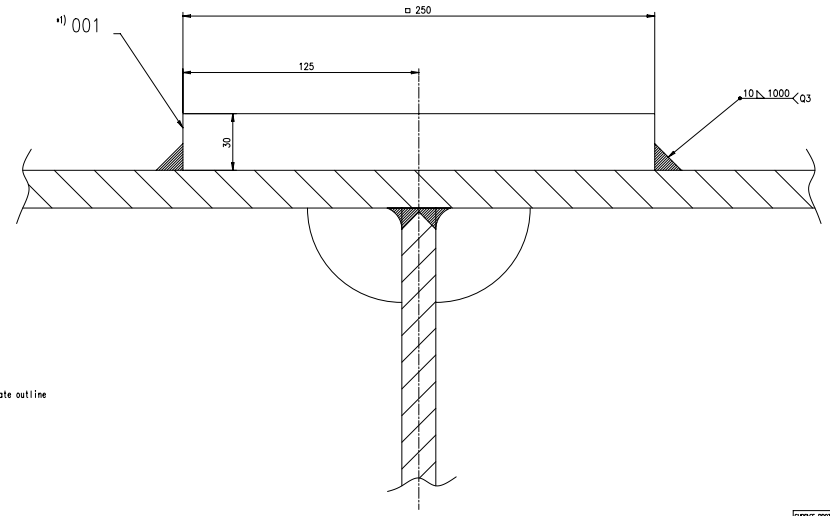

REMARKS:

*1) Access to the plate has to be kept clear for the hydraulic jack, to lift up the flywheel, during removal of lower main bearing shell.

Quantity	Item NO	Material ID	Material Name	Dimension, Etc	Drawing or Material No.	Basic Material Material Standard	Weight GRUNET
1	001	107.246.799.001	FLAT BAR		107.246.799		15,0

Material	Rev.	Date of Change	Name	Number	Drawn date	Number	Drawn date	Number	Drawn date	Number	Drawn date
107.246.799.000	D		EAAD064725	18.09.2013	G	EAAD069974	20.03.2014	H EAAD086107	11.09.2015	I EAAD095725	18.01.2021

Product: W-2S

PLATE
TO HYDRAULIC JACK
Blech

Units: mm kg N.X.

Basic Material: Net Weight

SURFACE PROTECTION: SEE GROUP 8344	Made	09.11.2000 S.Stylianou	Scale 1:14	Size A0	Page 1/1
TOLERANCING PRINCIPLE ISO8015	Chkd		Design Group 9722	Drawing ID 107.246.799	Rev.
GENERAL TOLERANCES ACCORDING TO ISO2768-mK	Appd	03.11.2000 WCH4101 Service User			

Copyright Winterthur Gas & Diesel Ltd. All rights reserved. By taking possession of this drawing the recipient recognizes and honours these rights. Neither the whole nor any part of this drawing may be used in any way for construction, fabrication, marketing or any other purpose nor copied in any way nor made accessible to third parties without the previous written consent of Winterthur Gas & Diesel Ltd.

DE: AD2000 Merkblatt, Werkstoff

SECTION A-A

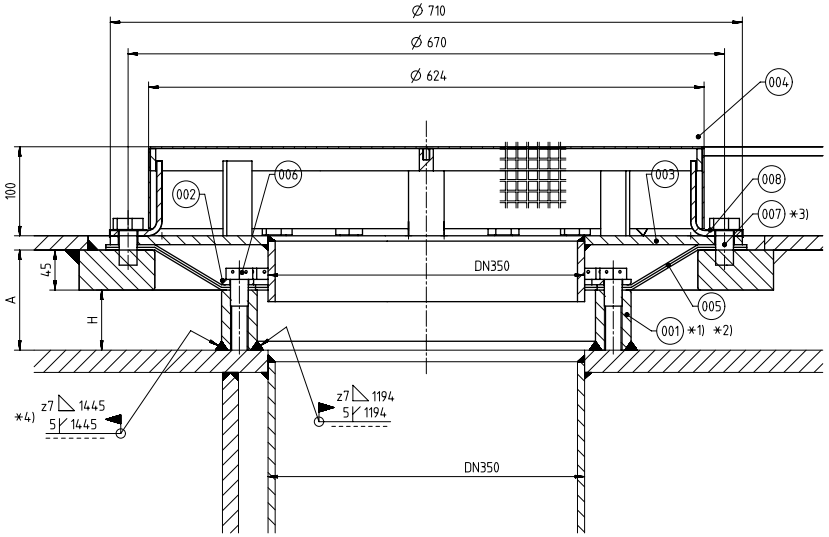

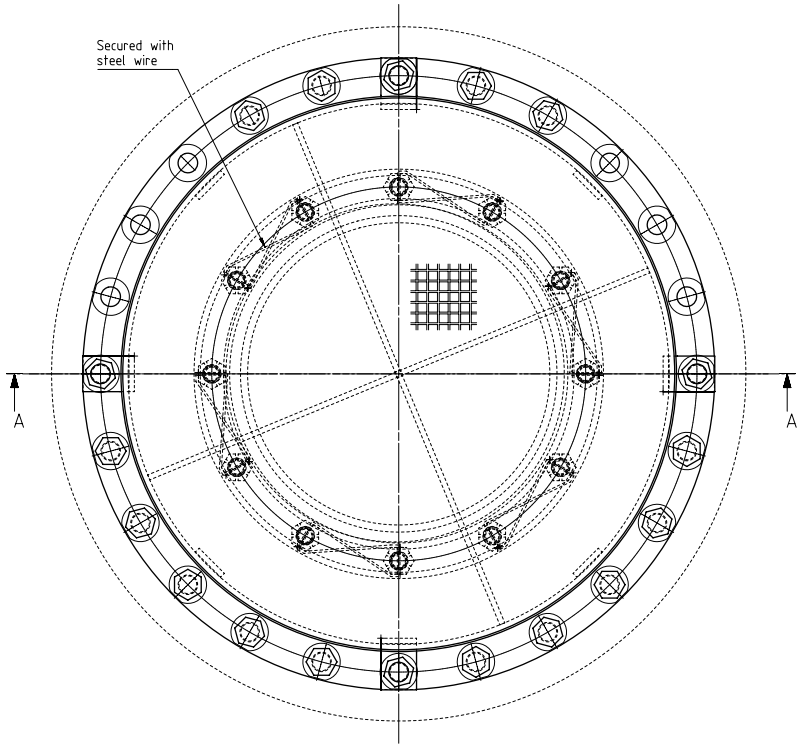

REMARKS:

*1) To be aligned after engine is in final position.

*2) Pos. 001, 002, 005 and 006 to be pre-assembled prior to alignment.
After alignment the Pos. 001 (flange) can be welded in place.

*3) Driven in oil tight with jointing compound.

*4) No specific quality level required.
Oil tight is fundamental.

A	To be measured after alignment of the engine
H	A - 45 mm

QTY	SEQ NO	Material ID	Material Name / Dimension, Occ	Standard or Drawing	Basic Material / Material Standard	Weight GR/NET
24	008	015.507.360.910	TAB WASHER 21	DIN 93	Steel Zn 5 bk	0,1
24	007	015.151.044.261	HEXAGON HEAD SCREW M20x40	ISO 4017	8.8	0,155
12	006	015.151.374.201	HEXAGON HEAD SCREW M20x30		8.8	0,12
2	005	PAAD104199	RUBBER GASKET	DAAD032827	NBR Perbunan	1,5
1	004	PAAD381274	OIL STRAINER	DAAD143410		8,3
1	003	PAAD104189	COVER	DAAD032819		24,9
1	002	PAAD104051	RING	DAAD032783	W-FU-235-JR	2,4
1	001	PAAD104868	WELDING FLANGE	DAAD032919	W-FU-235-JR	29,0

Free space for Ic

Q-Code XXXXX

Standard ISO; JIS

Main Drw.

Modif. | Number | Drawn date | Number | Drawn date | Number | Drawn date | Number | Drawn date

Product W-2S

VERTICAL OIL DRAIN

Oelablauf vertikal

Units mm kg | NX | Basic Material | Net Weight 75

SURFACE PROTECTION SEE GROUP 0344

TOLERANCING PRINCIPLE ISO8015

GENERAL TOLERANCES ACCORDING TO ISO2768-mK

Made	30.04.2021	dki021	DH.Kim
Chkd	30.04.2021	jpi101	Pickup
Appd	30.04.2021	mhu019	Hug

Scale 1:3 | Size A1 | Page 1/1 | Material ID PAAD381278

Design Group 9722 | Drawing ID DAAD143415 | Rev. –

DIMENSIONAL DRAWING - Confidential

Approved

Copyright Winterthur Gas & Diesel Ltd. All rights reserved. By taking possession of the drawing the recipient recognizes and honours these rights. Neither the whole nor any part of this drawing may be used in any way for construction, fabrication, marketing or any other purpose nor copied in any way nor made accessible to third parties without the previous written consent of Winterthur Gas & Diesel Ltd.

B

SECTION A-A

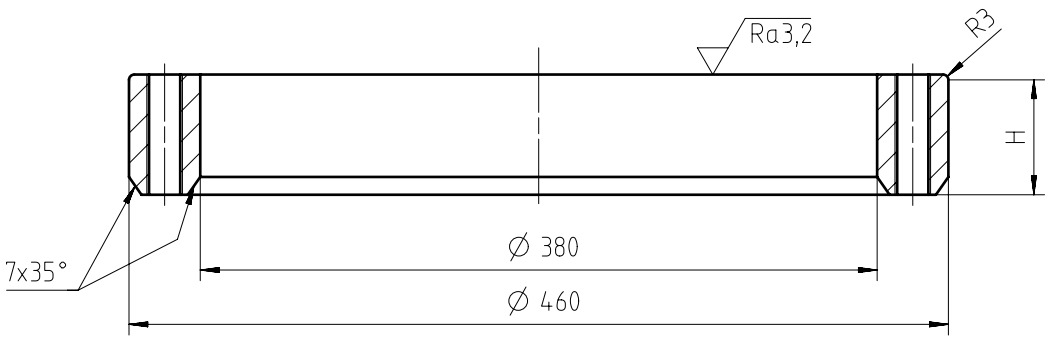

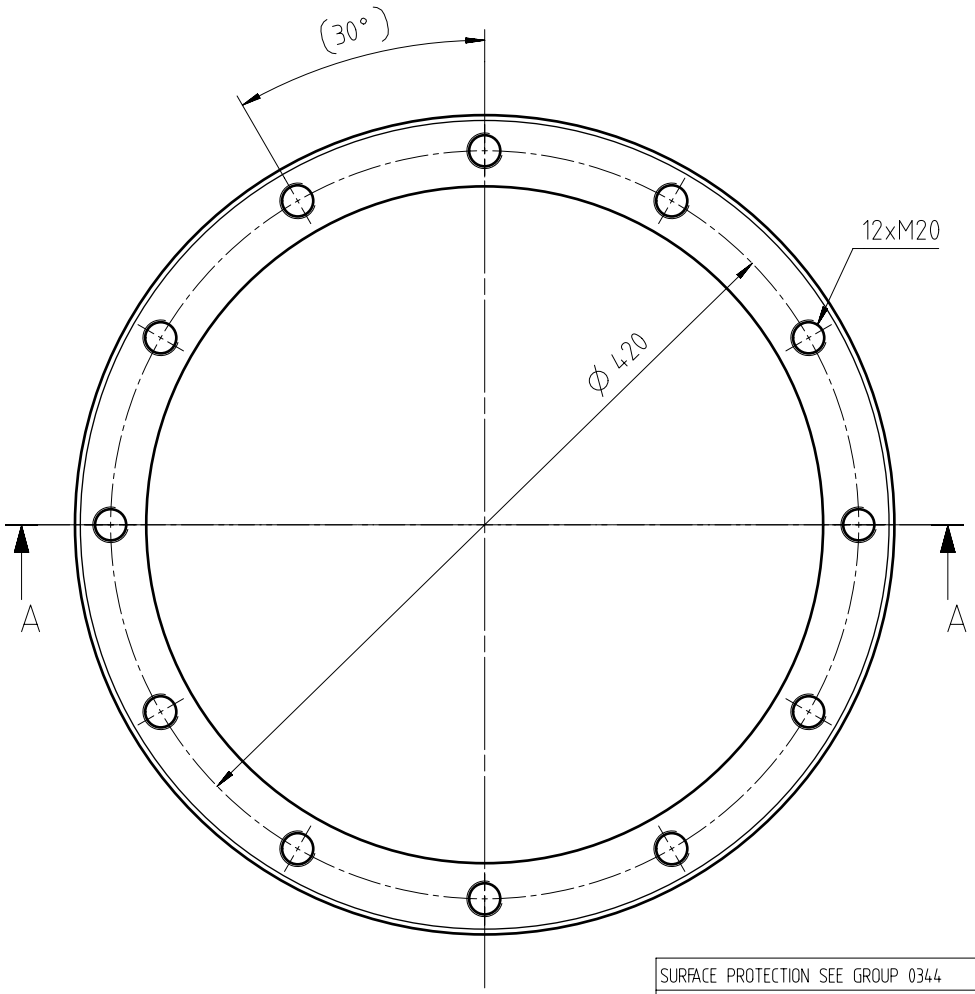

Ra12,5 (✓) SHARP EDGES REMOVED

H depends on chock thickness

H = A - 45 mm

for the relation of A see Drawing DAAD033160

Free space for lic.										Q-Code XXXXX		Main Drw.
										Standard ISO; JIS		
Modif.	A	EAAD084385	07.04.2015	B	EAAD091530	28.01.2020						
		Number	Drawn date		Number	Drawn date		Number	Drawn date		Number	Drawn date

WIN GD Winterthur Gas & Diesel

Product W-2S

WELDING FLANGE

Anschweissflansch

Units mm kg	NX		Basic Material W-FU-235-JR				Net Weight 29
Made	05.11.2012	asex06 A.Sekulic	Scale 1:3	Size A3	Page 1/1	Material ID PAAD104868	
Chkd	03.12.2012	mhu019 Hug	Design Group 9720	Drawing ID DAAD032919			Rev. B
Appd	03.12.2012	wwr001 Wroblewski					

SURFACE PROTECTION SEE GROUP 0344

TOLERANCING PRINCIPLE ISO8015

GENERAL TOLERANCES ACCORDING TO ISO2768-mK

Approved

DID - DIMENSIONAL DRAWING - Confidential

Copyright Winterthur Gas & Diesel Ltd. All rights reserved. By taking possession of the drawing the recipient recognizes and honours these rights. Neither the whole nor any part of this drawing may be used in any way for construction, fabrication, marketing or any other purpose nor copied in any way nor made accessible to third parties without the previous written consent of Winterthur Gas & Diesel Ltd.

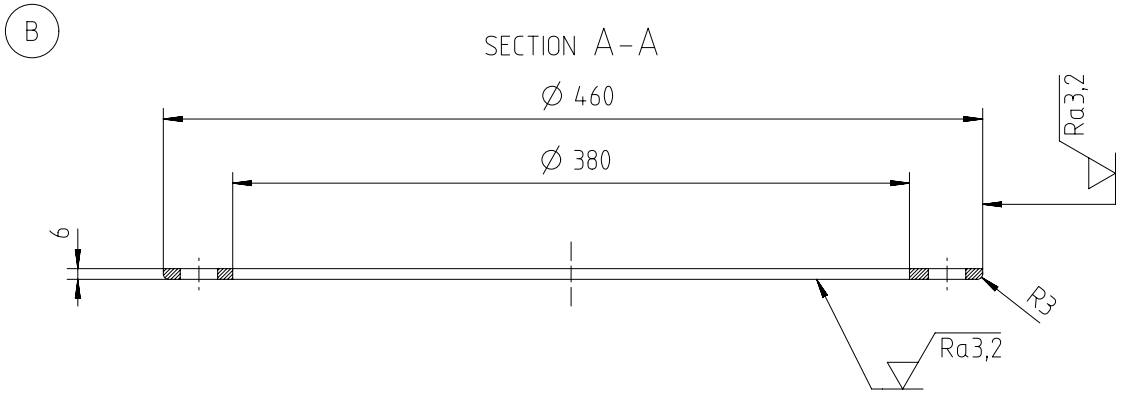

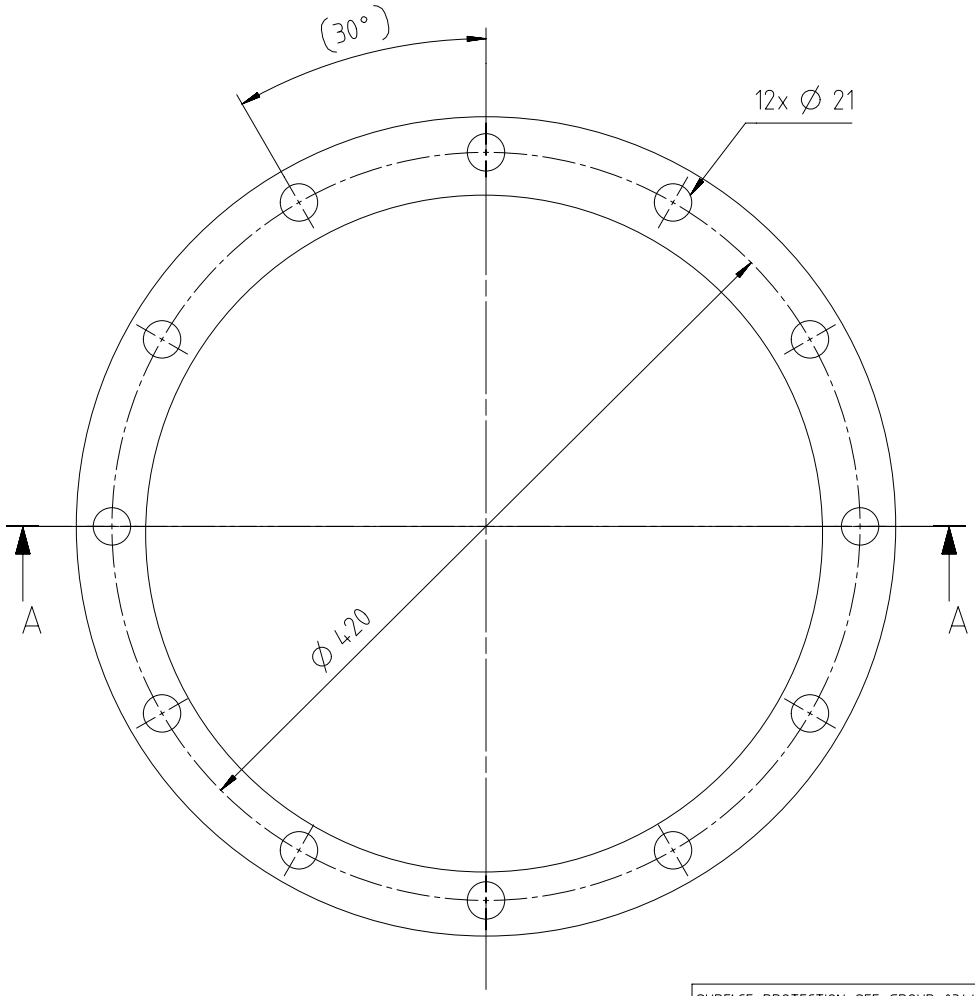

Ra12,5 (✓) SHARP EDGES REMOVED

Free space for lic.									Q-Code XXXXX		Main Drw.
									Standard ISO; JIS		
Modif.	A	EAAD084385	07.04.2015	B	EAAD091530	28.01.2020					
		Number	Drawn date		Number	Drawn date		Number	Drawn date	Number	Drawn date

WIN GD Winterthur Gas & Diesel

Product W-2S

RING

Ring

Units mm kg	NX		Basic Material W-FU-235-JR				Net Weight 2,4
Made	30.10.2012 asex06 A.Sekulic		Scale 1:3	Size A3	Page 1/1	Material ID PAAD104051	
Chkd	03.12.2012 mhu019 Hug		Design Group 9722	Drawing ID DAAD032783			Rev. B
Appd	03.12.2012 wwr001 Wroblewski						

SURFACE PROTECTION SEE GROUP 0344
TOLERANCING PRINCIPLE ISO8015
GENERAL TOLERANCES ACCORDING TO ISO2768-mK

Approved

DID - DIMENSIONAL DRAWING - Confidential

Copyright Winterthur Gas & Diesel Ltd. All rights reserved. By taking possession of the drawing the recipient recognizes and honours these rights. Neither the whole nor any part of this drawing may be used in any way for construction, fabrication, marketing or any other purpose nor copied in any way nor made accessible to third parties without the previous written consent of Winterthur Gas & Diesel Ltd.

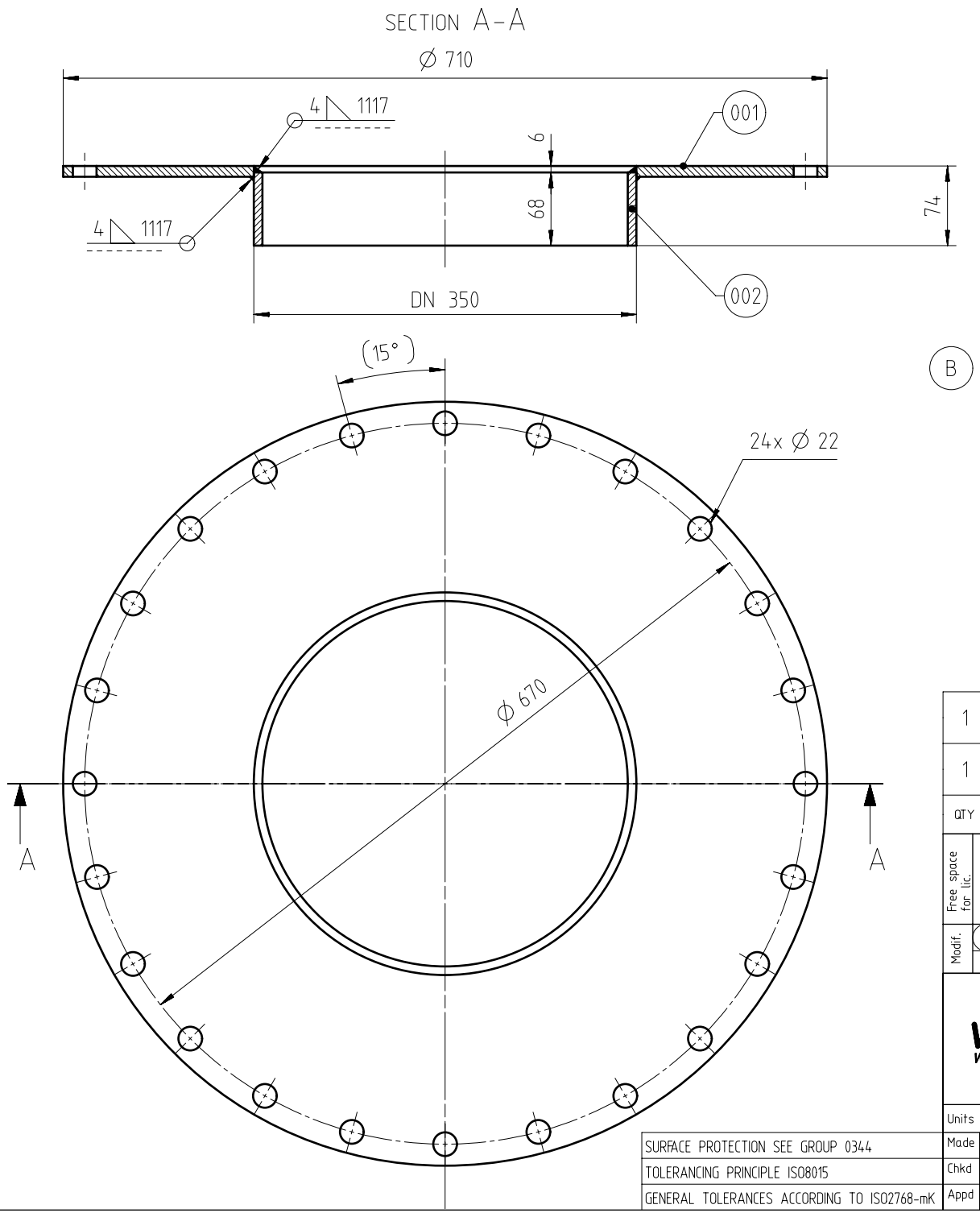

QTY	SEQ NO	Material ID	Material Name / Dimension, Occ	Standard or Drawing	Basic Material / Material Standard	Weight GR./NET
1	002	PAAD349288	TUBE	DAAD126868	W-FU-235-JR	2,4
1	001	PAAD104141	PLATE	DAAD032811	W-FU-235-JR	22,5

Approved

Free space for lic.

Q-Code: XXXXX

Standard: ISO; JIS

Main Drw.

Modif.	Number	Drawn date	Number	Drawn date	Number	Drawn date	Number	Drawn date
A	EAAD084385	07.04.2015	B EAAD091530	29.01.2020				

WIN GD Winterthur Gas & Diesel

Product: W-2S

COVER
VERTICAL OIL DRAIN
Deckel

Units: mm kg | NX | Basic Material | Net Weight 24,9

SURFACE PROTECTION SEE GROUP 0344
TOLERANCING PRINCIPLE ISO8015
GENERAL TOLERANCES ACCORDING TO ISO2768-mK

Made	31.10.2012	asex06	A.Sekulic
Chkd	04.12.2012	mhu019	Hug
Appd	04.12.2012	wwr001	Wroblewski

Scale 1:4 | Size A3 | Page 1/1 | Material ID PAAD104189

Design Group 9722 | Drawing ID DAAD032819 | Rev. B

DID - DIMENSIONAL DRAWING - Confidential

Copyright Winterthur Gas & Diesel Ltd. All rights reserved. By taking possession of the drawing the recipient recognizes and honours these rights. Neither the whole nor any part of this drawing may be used in any way for construction, fabrication, marketing or any other purpose nor copied in any way nor made accessible to third parties without the previous written consent of Winterthur Gas & Diesel Ltd.

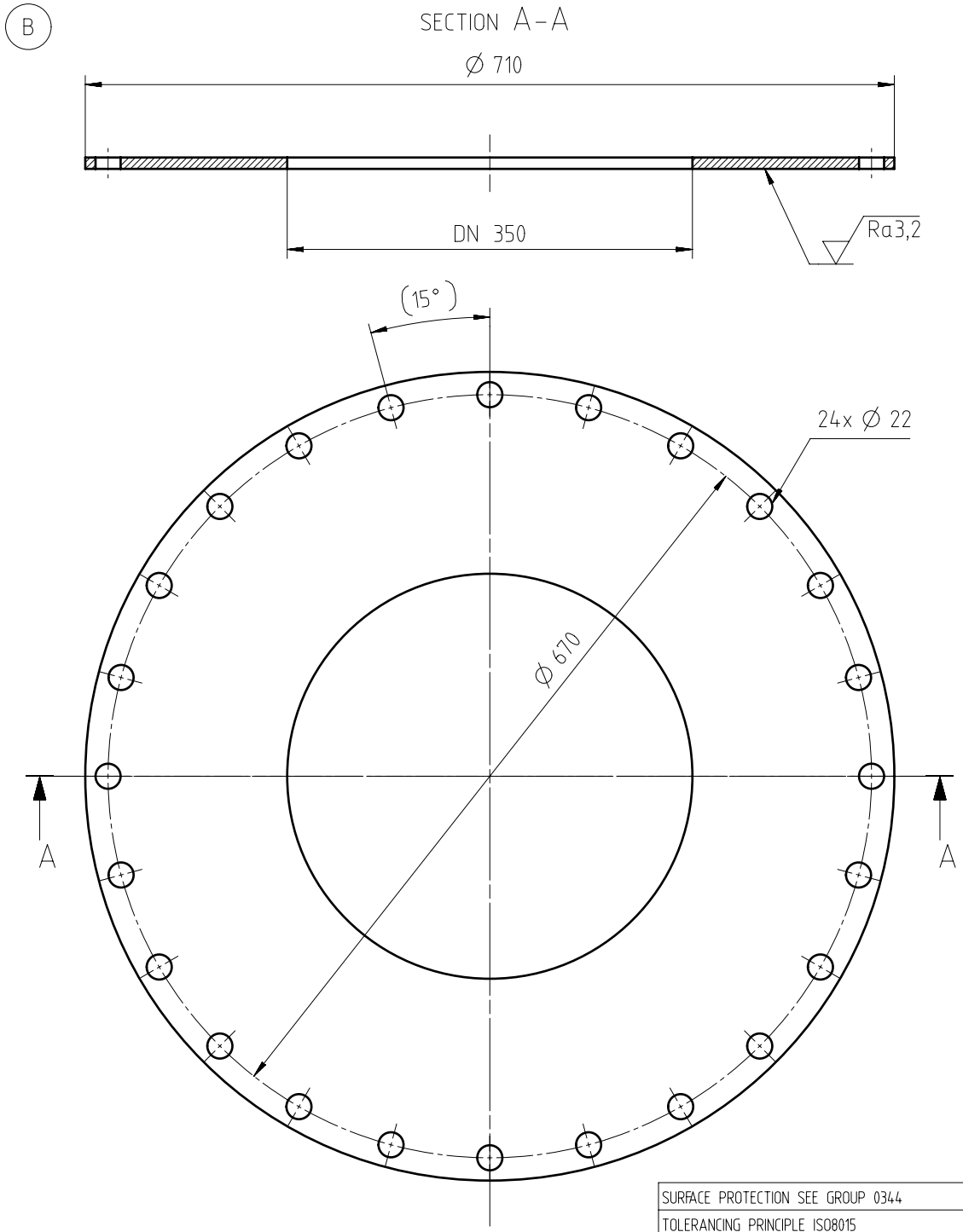

Ra12,5 (✓) SHARP EDGES REMOVED

Free space for lic.										Q-Code XXXXX		Main Drw.
										Standard ISO; JIS		
Modif.	A	EAAD084385	07.04.2015	B	EAAD091530	28.01.2020						
		Number	Drawn date		Number	Drawn date		Number	Drawn date		Number	Drawn date

WIN GD Winterthur Gas & Diesel

Product W-2S

PLATE

Blech

Units mm kg	NX		Basic Material W-FU-235-JR				Net Weight 22,5
Made	31.10.2012	asex06 A.Sekulic	Scale 1:4	Size A3	Page 1/1	Material ID PAAD104141	
Chkd	03.12.2012	mhu019 Hug	Design Group 9720	Drawing ID DAAD032811			Rev. B
Appd	03.12.2012	wwr001 Wroblewski					

SURFACE PROTECTION SEE GROUP 0344
TOLERANCING PRINCIPLE ISO8015
GENERAL TOLERANCES ACCORDING TO ISO2768-mK

Approved

DID - DIMENSIONAL DRAWING - Confidential

Copyright Winterthur Gas & Diesel Ltd. All rights reserved. By taking possession of the drawing the recipient recognizes and honours these rights. Neither the whole nor any part of this drawing may be used in any way for construction, fabrication, marketing or any other purpose nor copied in any way nor made accessible to third parties without the previous written consent of Winterthur Gas & Diesel Ltd.

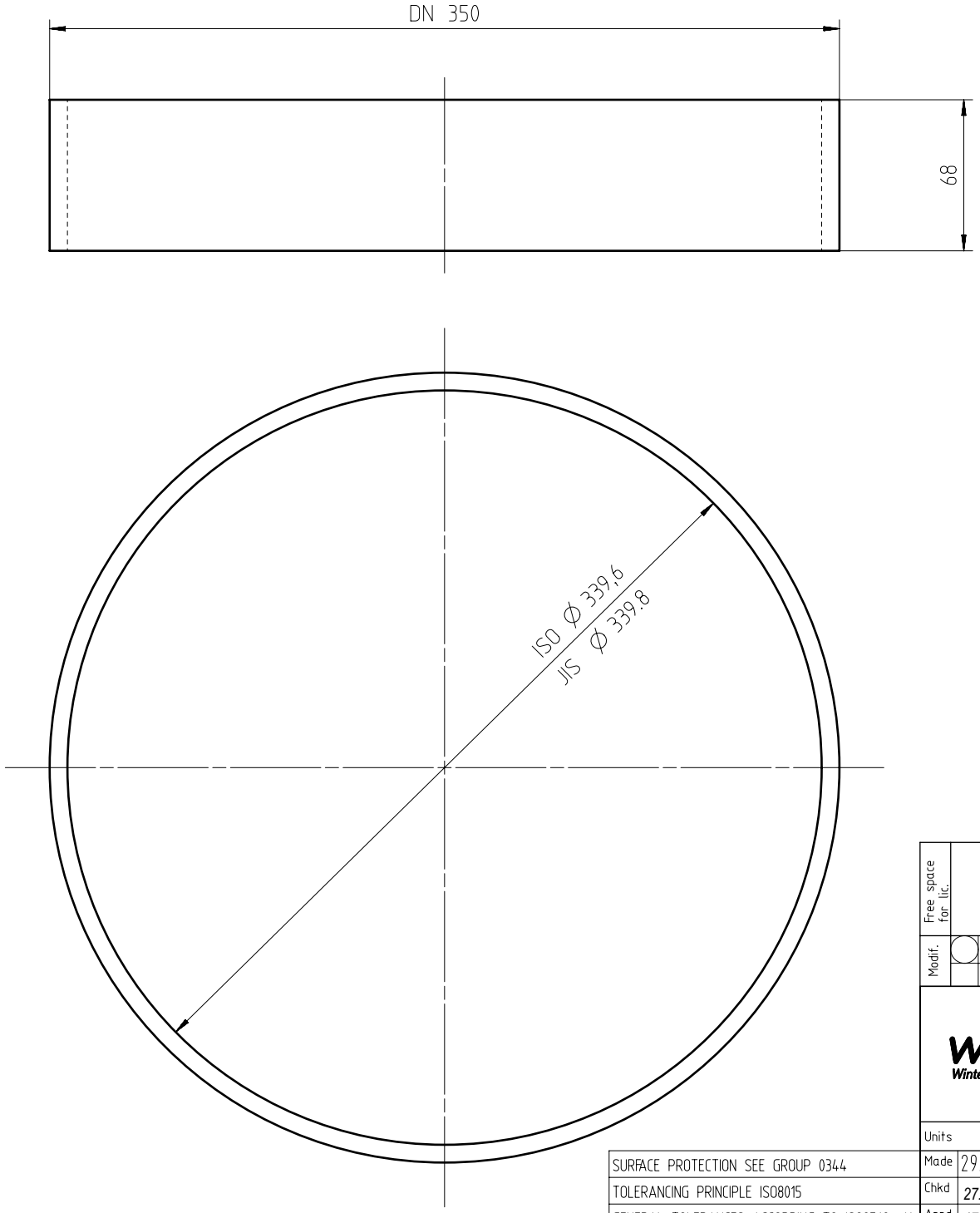

Free space for lic.										Q-Code XXXXX	Main Drw.
										Standard ISO; JIS	
Modif.	Number	Drawn date	Number	Drawn date	Number	Drawn date	Number	Drawn date			

WIN GD Winterthur Gas & Diesel

Product W-2S

TUBE

Rohrstueck

Units mm kg	NX	Basic Material W-FU-235-N-T			Net Weight 2,4
SURFACE PROTECTION SEE GROUP 0344	Made 29.01.2020 dki021 DH.Kim	Scale 1:2	Size A3	Page 1/1	Material ID PAAD349288
TOLERANCING PRINCIPLE ISO8015	Chkd 27.02.2020 jpi101 Pickup	Design Group 9722	Drawing ID DAAD126868		Rev. –
GENERAL TOLERANCES ACCORDING TO ISO2768-mK	Appd 17.03.2020 mhu019 Hug				

Approved

DID - DIMENSIONAL DRAWING - Confidential

Copyright Winterthur Gas & Diesel Ltd. All rights reserved. By taking possession of the drawing the recipient recognizes and honours these rights. Neither the whole nor any part of this drawing may be used in any way for construction, fabrication, marketing or any other purpose nor copied in any way nor made accessible to third parties without the previous written consent of Winterthur Gas & Diesel Ltd.

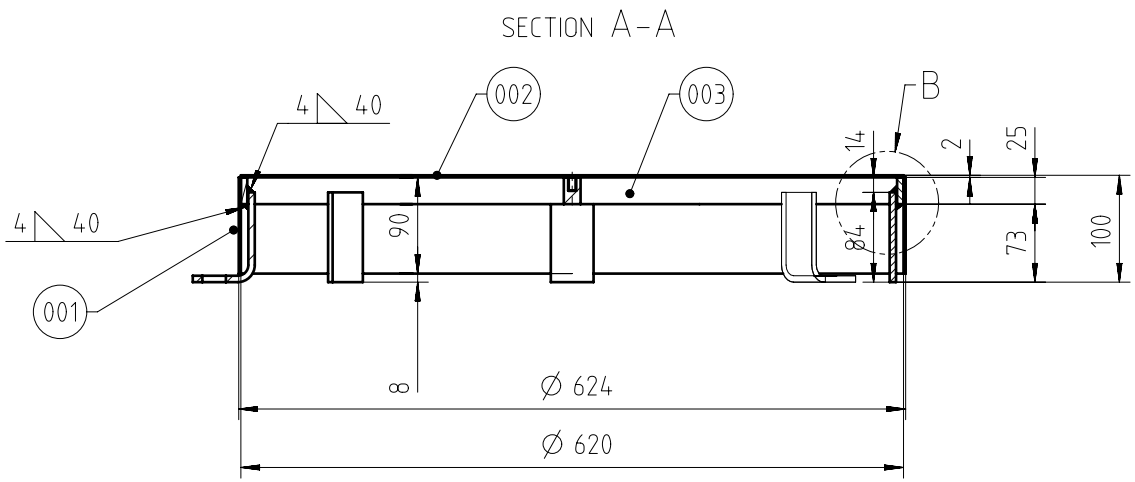

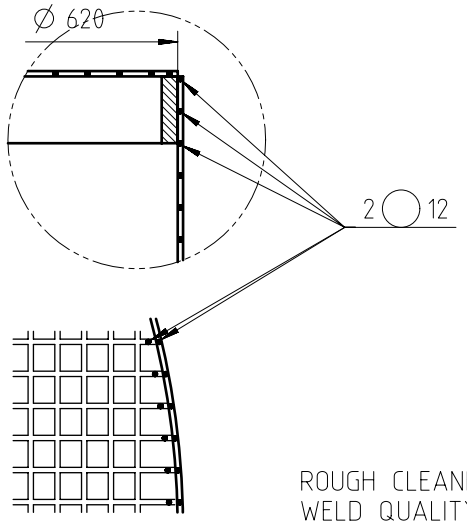

ROUGH CLEANED
WELD QUALITY CLASS Q3

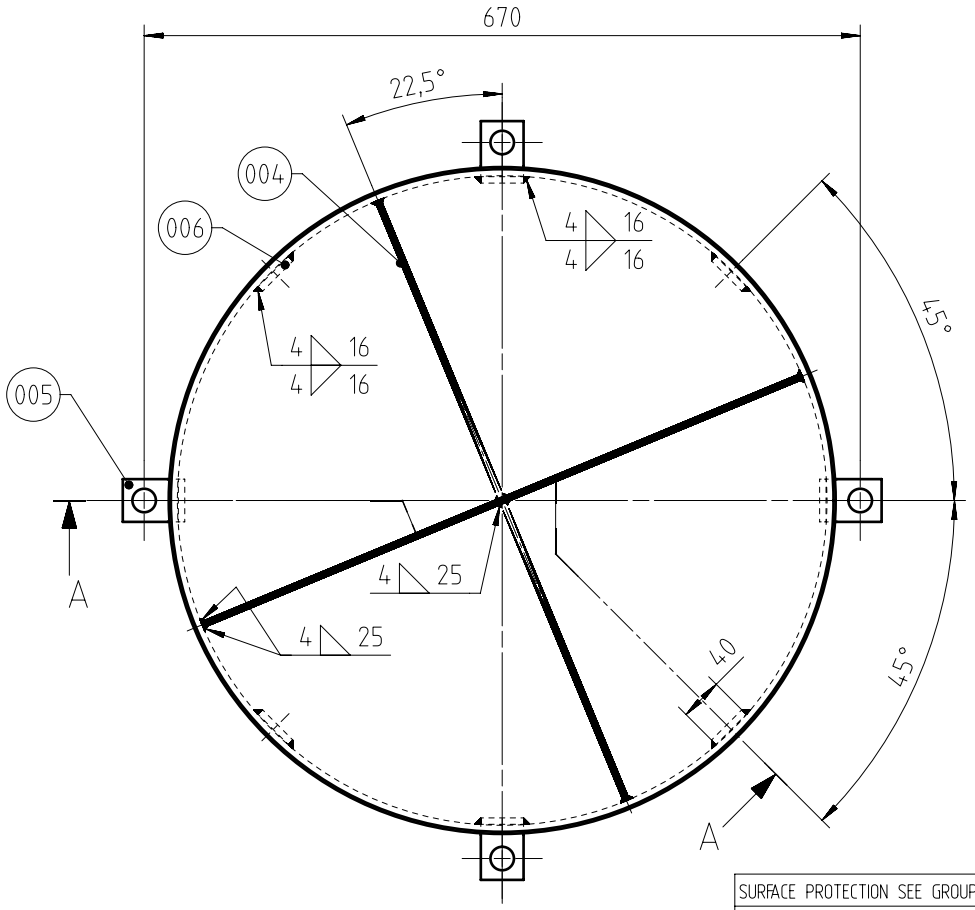

QTY	SEQ NO	Material ID	Material Name / Dimension, Occ	Standard or Drawing	Basic Material / Material Standard	Weight GR./NET
4	006	PAAD381277	FLAT BAR 40x6x151	DAAD143414	W-FU-235-JR	0,2
4	005	PAAD381276	HOLDER	DAAD143413	W-FU-235-JR	0,24
2	004	PAAD104882	FLAT BAR 608x25x6	DAAD032933	W-FU-235-JR	0,85
1	003	PAAD104881	RING 608x25x6	DAAD032928	W-FU-235-JR	2,7
1	002	PAAD104875	PERFORATED SHEET NO ZINC PLATED D620	DAAD126992	W-FU-235-JR	1,4
1	001	PAAD381275	PERFORATED SHEET NO ZINC PLATED DIN 1954	DAAD143411	W-FU-235-JR	0,7

Approved

Free space for lic.

Q-Code: XXXXX

Standard: ISO; JIS

Main Drw.

Modif. | Number | Drawn date | Number | Drawn date | Number | Drawn date | Number | Drawn date

WIN GD Winterthur Gas & Diesel

Product: W-2S

OIL STRAINER
FOR OIL DRAIN IN BEDPLATE

Oelsieb

Units: mm kg | NX | Basic Material | Net Weight 8,3

SURFACE PROTECTION SEE GROUP 0344

TOLERANCING PRINCIPLE ISO8015

GENERAL TOLERANCES ACCORDING TO ISO2768-mK

Made	30.04.2021 dki021 DH.Kim	Scale 1:5	Size A3	Page 1/1	Material ID PAAD381274
Chkd	30.04.2021 jpi101 Pickup	Design Group 9722	Drawing ID DAAD143410		Rev. –
Appd	30.04.2021 mhu019 Hug				

DID - DIMENSIONAL DRAWING - Confidential

Copyright Winterthur Gas & Diesel Ltd. All rights reserved. By taking possession of the drawing the recipient recognizes and honours these rights. Neither the whole nor any part of this drawing may be used in any way for construction, fabrication, marketing or any other purpose nor copied in any way nor made accessible to third parties without the previous written consent of Winterthur Gas & Diesel Ltd.

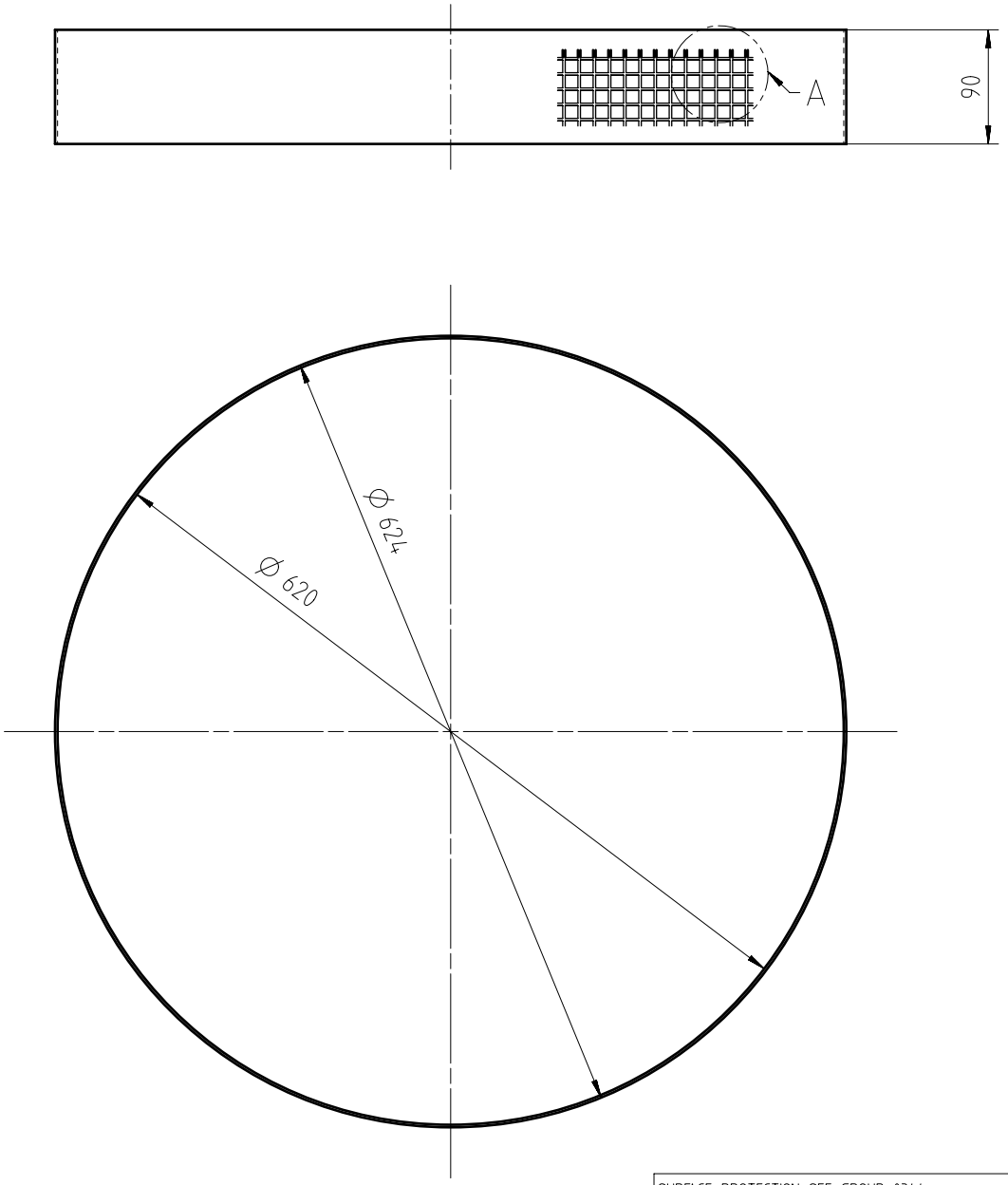

DETAIL A
SCALE 1:1

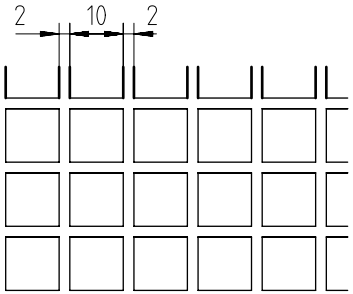

Free space for lic.									Q-Code XXXXX		Main Drw.
									Standard ISO; JIS		
Modif.		Number	Drawn date		Number	Drawn date		Number	Drawn date	Number	Drawn date

WIN GD Winterthur Gas & Diesel

Product W-2S

PERFORATED SHEET

Lochblech

Units mm kg	NX		Basic Material W-FU-235-JR			Net Weight 0,7
SURFACE PROTECTION SEE GROUP 0344	Made	30.04.2021 dki021 DH.Kim	Scale 1:4	Size A3	Page 1/1	Material ID PAAD381275
TOLERANCING PRINCIPLE ISO8015	Chkd	30.04.2021 jpi101 Pickup	Design Group 9722	Drawing ID DAAD143411		Rev. –
GENERAL TOLERANCES ACCORDING TO ISO2768-mK	Appd	30.04.2021 mhu019 Hug				

Approved

DID - DIMENSIONAL DRAWING - Confidential

Copyright Winterthur Gas & Diesel Ltd. All rights reserved. By taking possession of the drawing the recipient recognizes and honours these rights. Neither the whole nor any part of this drawing may be used in any way for construction, fabrication, marketing or any other purpose nor copied in any way nor made accessible to third parties without the previous written consent of Winterthur Gas & Diesel Ltd.

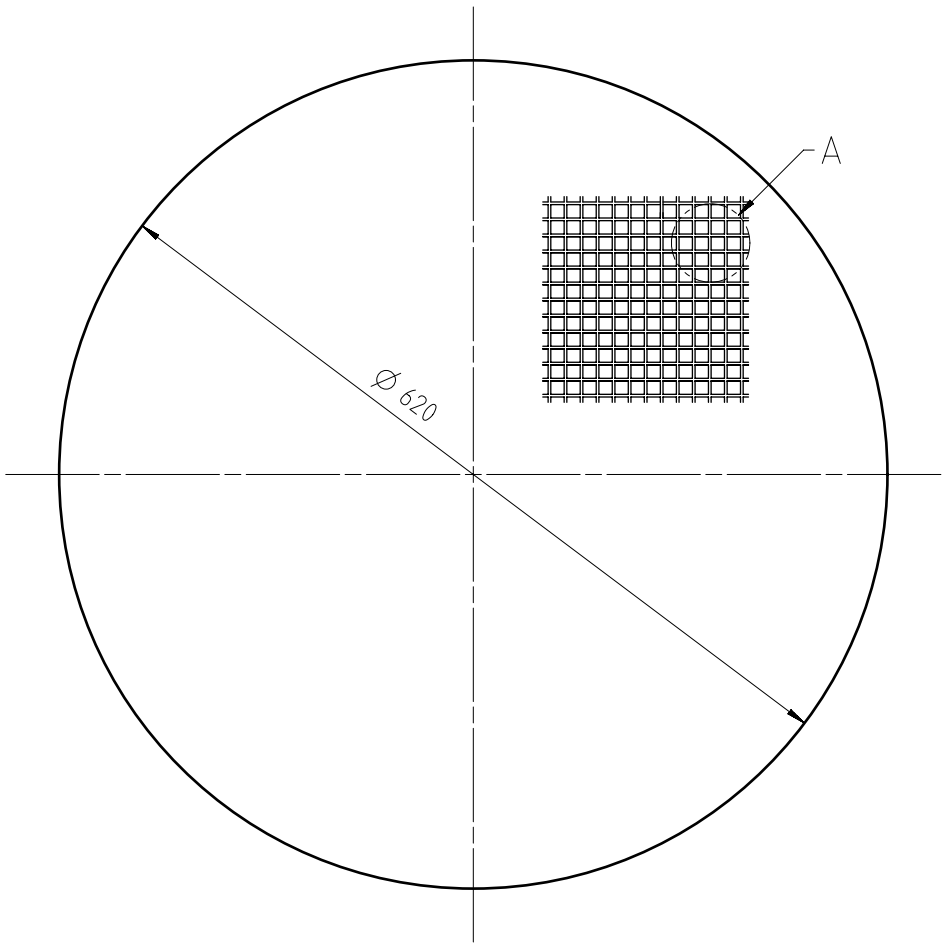

DETAIL A
SCALE 1:1

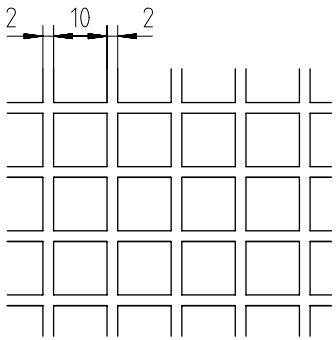

Free space for lic.									Q-Code XXXXX		Main Drw.
									Standard ISO; JIS		
Modif.		Number	Drawn date		Number	Drawn date		Number	Drawn date		Number	Drawn date

WIN GD Winterthur Gas & Diesel

Product W-2S

PERFORATED SHEET

Lochblech

Units mm kg	NX	Basic Material W-FU-235-JR				Net Weight 1,4
SURFACE PROTECTION SEE GROUP 0344	Made 03.02.2020 dki021 DH.Kim	Scale 1:4	Size A3	Page 1/1	Material ID PAAD104875	
TOLERANCING PRINCIPLE ISO8015	Chkd 27.02.2020 jpi101 Pickup	Design Group 9722	Drawing ID DAAD126992			Rev. –
GENERAL TOLERANCES ACCORDING TO ISO2768-mK	Appd 17.03.2020 mhu019 Hug					

Approved

DID - DIMENSIONAL DRAWING - Confidential

Copyright Winterthur Gas & Diesel Ltd. All rights reserved. By taking possession of the drawing the recipient recognizes and honours these rights. Neither the whole nor any part of this drawing may be used in any way for construction, fabrication, marketing or any other purpose nor copied in any way nor made accessible to third parties without the previous written consent of Winterthur Gas & Diesel Ltd.

B

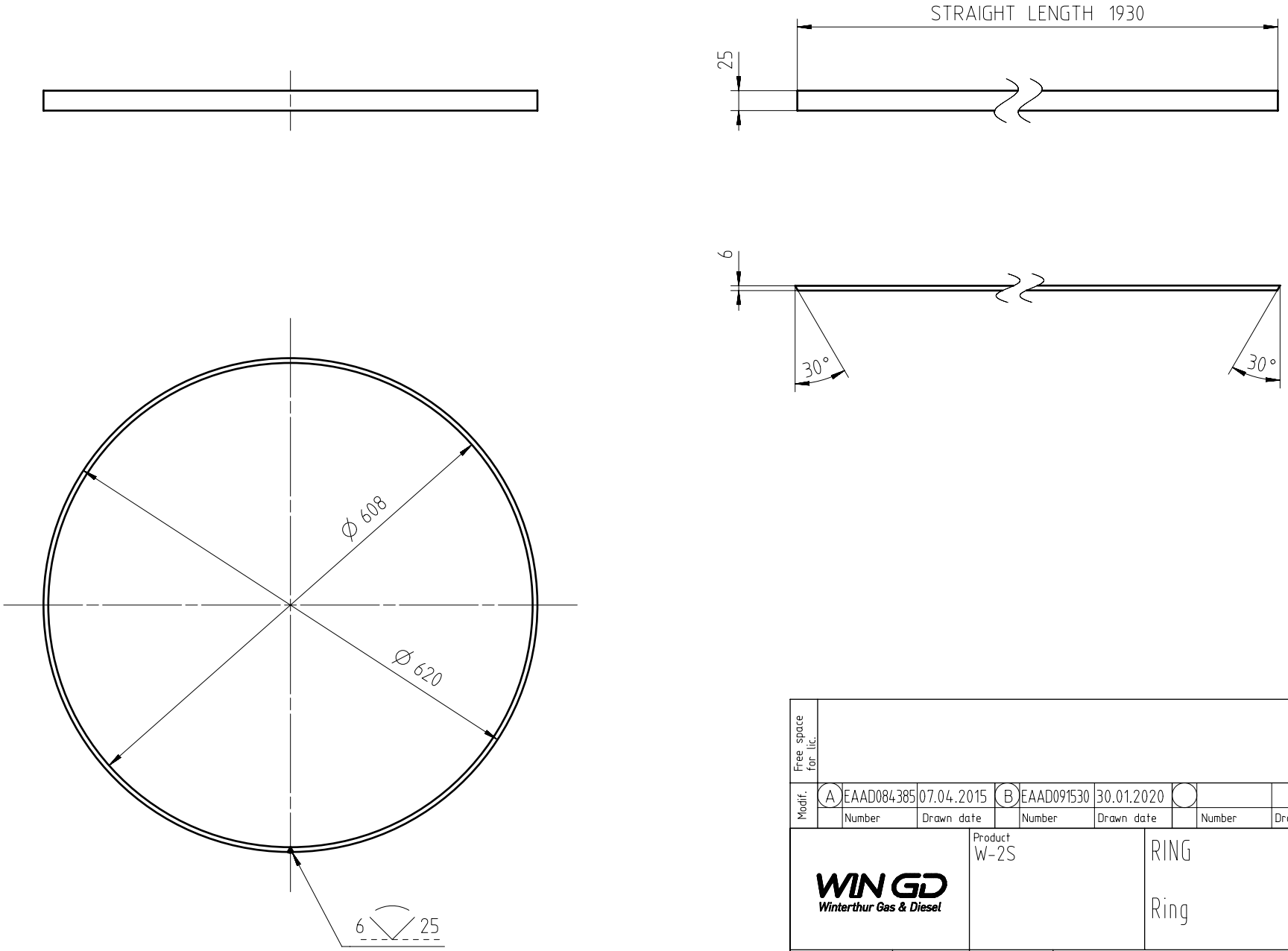

Free space for lic.										Q-Code XXXXX		Main Drw.
										Standard ISO; JIS		
Modif.	A	EAAD084385	07.04.2015	B	EAAD091530	30.01.2020						
		Number	Drawn date		Number	Drawn date		Number	Drawn date		Number	Drawn date

WIN GD Winterthur Gas & Diesel

Product W-2S

RING

Ring

Units mm kg	NX		Basic Material W-FU-235-JR				Net Weight 2,7
SURFACE PROTECTION SEE GROUP 0344	Made	06.11.2012 asex06 A.Sekulic	Scale 1:5	Size A3	Page 1/1	Material ID PAAD104881	
TOLERANCING PRINCIPLE ISO8015	Chkd	03.12.2012 mhu019 Hug	Design Group 9722	Drawing ID DAAD032928			Rev. B
GENERAL TOLERANCES ACCORDING TO ISO2768-mK	Appd	03.12.2012 wwr001 Wroblewski					

Approved

DID - DIMENSIONAL DRAWING - Confidential

Copyright Winterthur Gas & Diesel Ltd. All rights reserved. By taking possession of the drawing the recipient recognizes and honours these rights. Neither the whole nor any part of this drawing may be used in any way for construction, fabrication, marketing or any other purpose nor copied in any way nor made accessible to third parties without the previous written consent of Winterthur Gas & Diesel Ltd.

SURFACE PROTECTION SEE GROUP 0344
TOLERANCING PRINCIPLE ISO8015
GENERAL TOLERANCES ACCORDING TO ISO2768-mK

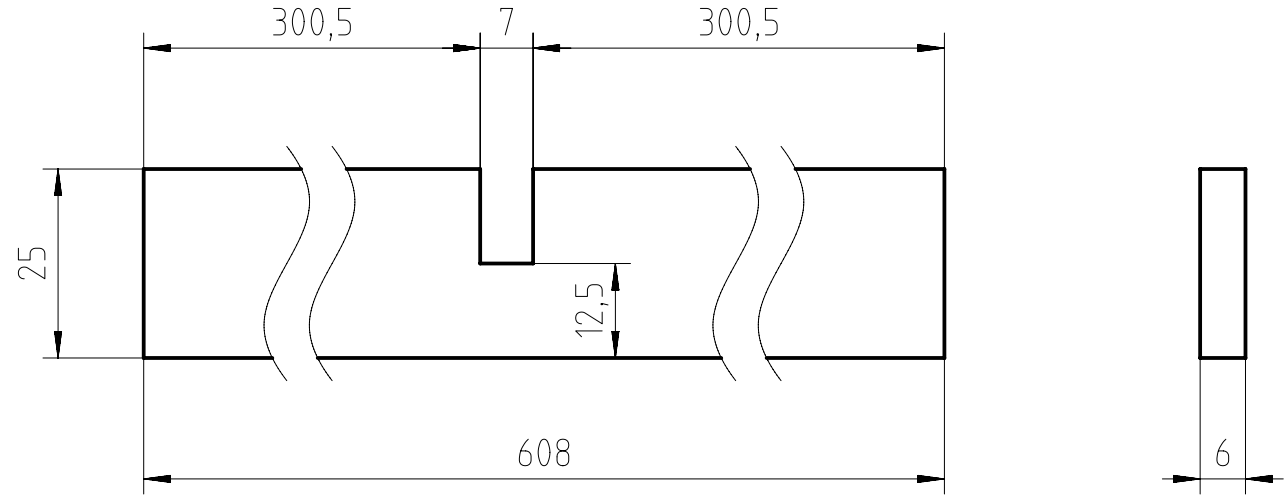

B

Approved

Free space for lic.									Q-Code XXXXX		Main Drw.	
									Standard ISO; JIS			
Modif.	A	EAAD084385	07.04.2015	B	EAAD091530	30.01.2020						
		Number	Drawn date		Number	Drawn date		Number	Drawn date		Number	Drawn date

WIN GD
Winterthur Gas & Diesel

Product
W-2S

FLAT BAR
ON FRAME FOR OIL STRAINER
Flachstahl

Units	mm kg	NX	Basic Material	W-FU-235-JR			Net Weight 0,85
Made	06.11.2012	asex06 A.Sekulic	Scale 1:1	Size A4	Page 1/1	Material ID	PAAD104882
Chkd	03.12.2012	mhu019 Hug	Design Group 9722	Drawing ID	DAAD032933		Rev. B
Appd	03.12.2012	wwr001 Wroblewski					

Copyright Winterthur Gas & Diesel Ltd. All rights reserved.
By taking possession of the drawing the recipient recognizes and honours these rights. Neither the whole nor any part of this drawing may be used in any way for construction, fabrication, marketing or any other purpose nor copied in any way nor made accessible to third parties without the previous written consent of Winterthur Gas & Diesel Ltd.

DID - DIMENSIONAL DRAWING - Confidential

SURFACE PROTECTION SEE GROUP 0344
TOLERANCING PRINCIPLE ISO8015
GENERAL TOLERANCES ACCORDING TO ISO2768-mK

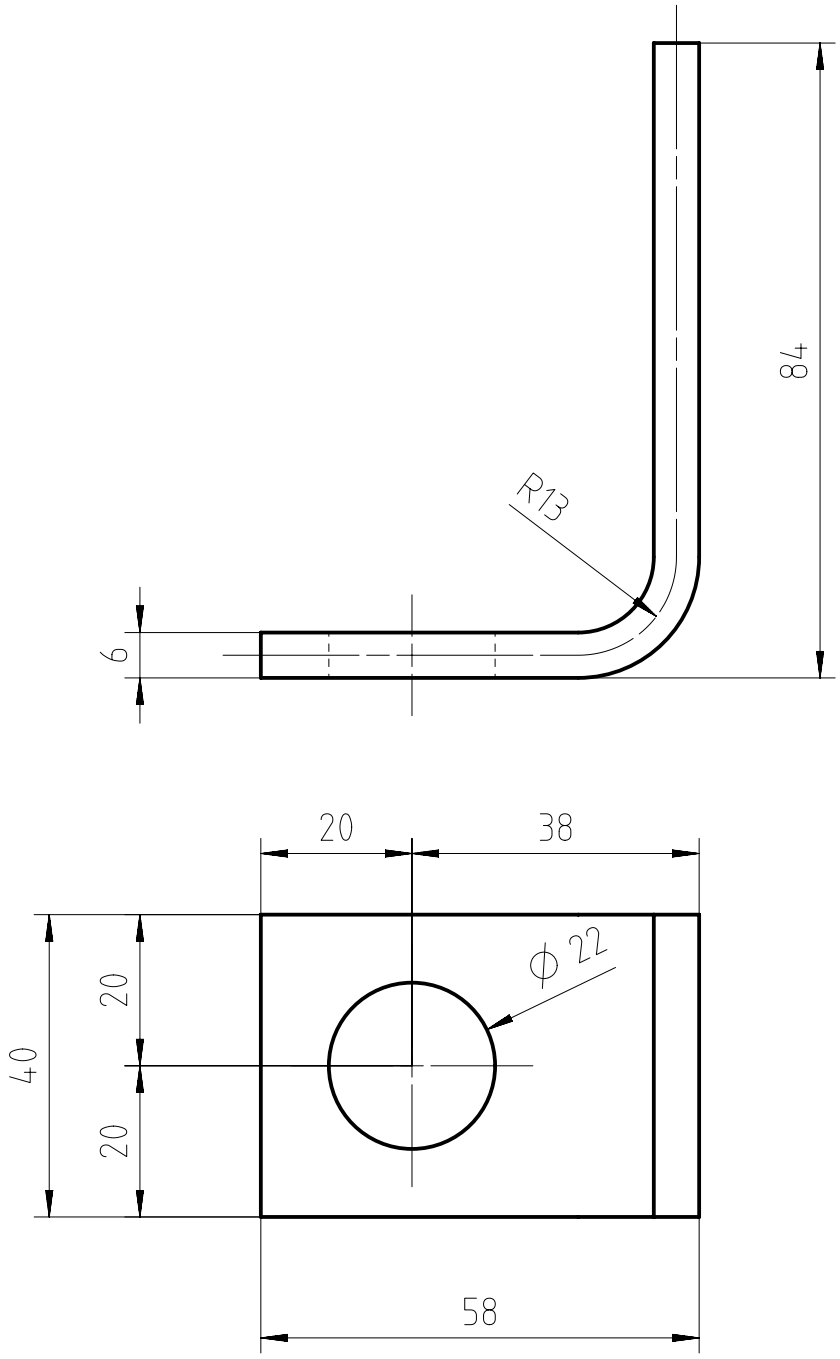

Approved

Free space for lic.		Q-Code XXXXX	Main Drw.
		Standard ISO; JIS	

Modif.	Number	Drawn date	Number	Drawn date	Number	Drawn date	Number	Drawn date

WIN GD Winterthur Gas & Diesel

Product W-2S

HOLDER
ON FRAME FOR OIL STRAINER
Halter

Units mm kg	NX	Basic Material W-FU-235-JR			Net Weight 0,24
Made	30.04.2021 dki021 DH.Kim	Scale 1:1	Size A4	Page 1/1	Material ID PAAD381276
Chkd	30.04.2021 jpi101 Pickup	Design Group 9722	Drawing ID DAAD143413		Rev. –
Appd	30.04.2021 mhu019 Hug				

Copyright Winterthur Gas & Diesel Ltd. All rights reserved.
By taking possession of the drawing the recipient recognizes and honours these rights. Neither the whole nor any part of this drawing may be used in any way for construction, fabrication, marketing or any other purpose nor copied in any way nor made accessible to third parties without the previous written consent of Winterthur Gas & Diesel Ltd.

DID - DIMENSIONAL DRAWING - Confidential

SURFACE PROTECTION SEE GROUP 0344

TOLERANCING PRINCIPLE ISO8015

GENERAL TOLERANCES ACCORDING TO ISO2768-mK

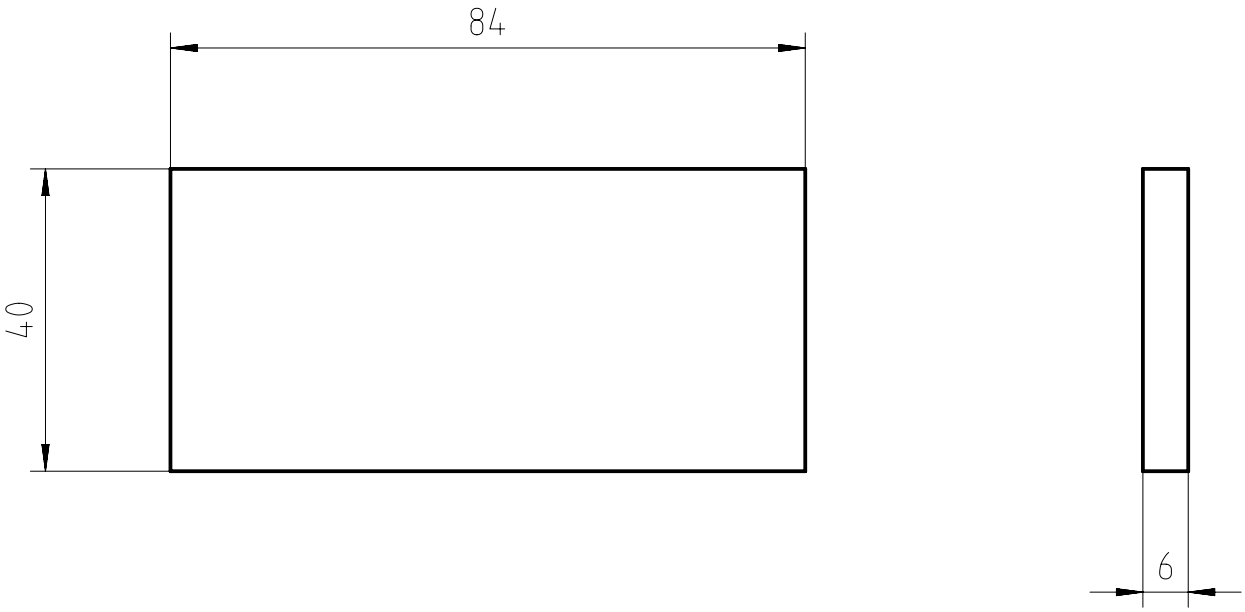

Approved

Free space for lic.									Q-Code XXXXX		Main Drw.
									Standard ISO; JIS		
Modif.	Number	Drawn date	Number	Drawn date	Number	Drawn date	Number	Drawn date	Number	Drawn date	

WIN GD Winterthur Gas & Diesel

Product W-2S

FLAT BAR

Flachstahl

Units mm kg	NX		Basic Material W-FU-235-JR			Net Weight 0,2
Made	30.04.2021 dki021 DH.Kim	Scale 1:1	Size A4	Page 1/1	Material ID PAAD381277	
Chkd	30.04.2021 jpi101 Pickup	Design Group 9722	Drawing ID DAAD143414			Rev. –
Appd	30.04.2021 mhu019 Hug					

Copyright Winterthur Gas & Diesel Ltd. All rights reserved.
By taking possession of the drawing the recipient recognizes and honours these rights. Neither the whole nor any part of this drawing may be used in any way for construction, fabrication, marketing or any other purpose nor copied in any way nor made accessible to third parties without the previous written consent of Winterthur Gas & Diesel Ltd.

DID - DIMENSIONAL DRAWING - Confidential

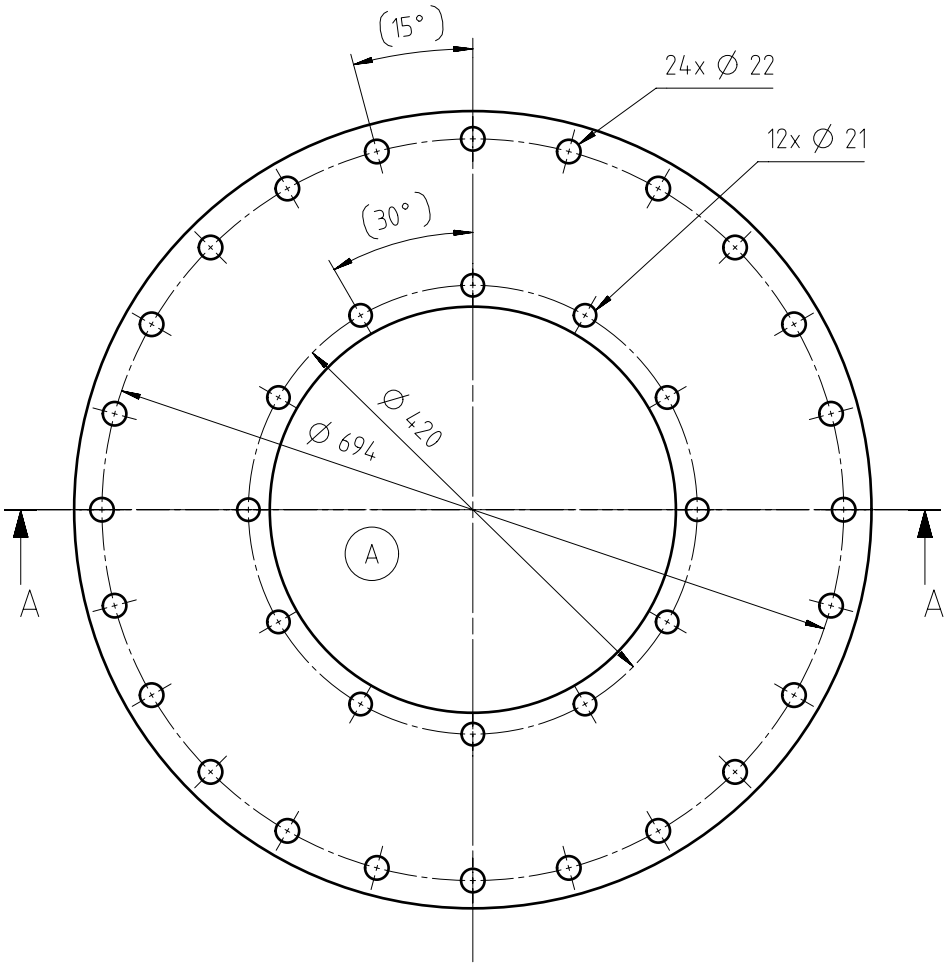

SECTION A-A

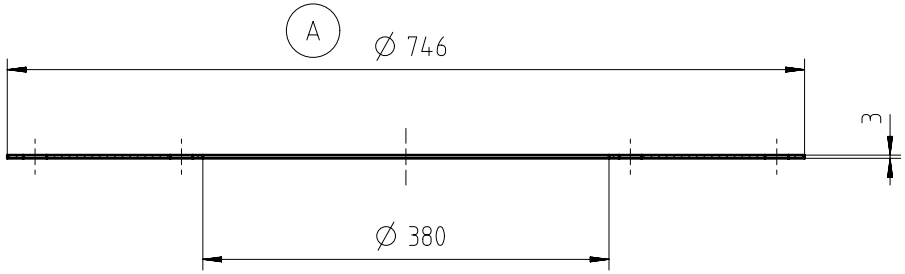

Free space for lic.									Q-Code XXXXX		Main Drw.
									Standard ISO; JIS		
Modif.	A	EAAD091530	30.01.2020								
		Number	Drawn date	Number	Drawn date	Number	Drawn date	Number	Drawn date		

WIN GD Winterthur Gas & Diesel

Product W-2S

RUBBER GASKET

Gummidichtung

Units mm kg	NX		Basic Material NBR Perbunan				Net Weight 1,5
Made	31.10.2012	asex06 A.Sekulic	Scale 1:5	Size A3	Page 1/1	Material ID	PAAD104199
Chkd	03.12.2012	mhu019 Hug	Design Group 9722	Drawing ID	DAAD032827		Rev. A
Appd	03.12.2012	wwr001 Wroblewski					

SURFACE PROTECTION SEE GROUP 0344
TOLERANCING PRINCIPLE ISO8015
GENERAL TOLERANCES ACCORDING TO ISO2768-mK

Approved

DID - DIMENSIONAL DRAWING - Confidential

Copyright Winterthur Gas & Diesel Ltd. All rights reserved. By taking possession of the drawing the recipient recognizes and honours these rights. Neither the whole nor any part of this drawing may be used in any way for construction, fabrication, marketing or any other purpose nor copied in any way nor made accessible to third parties without the previous written consent of Winterthur Gas & Diesel Ltd.

Specifications that need to be met:

Ⓑ W-X52/W-X52DF

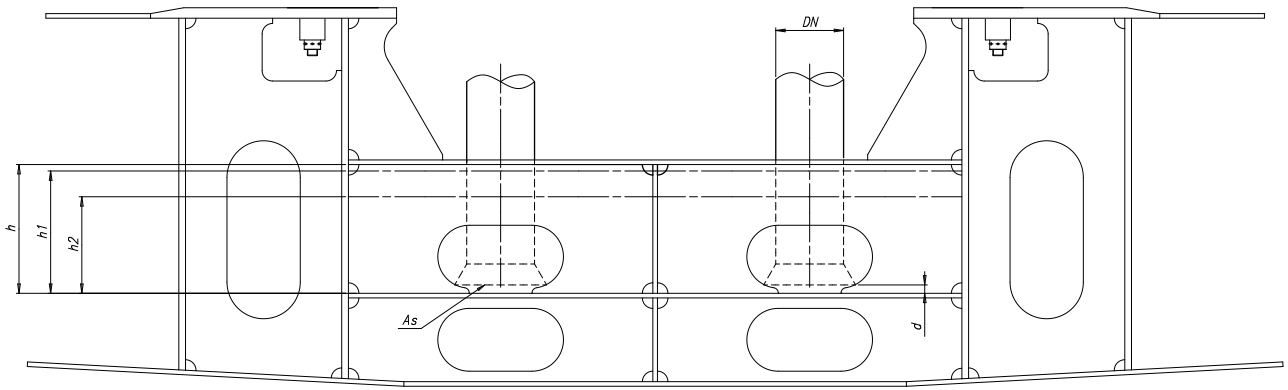

Dimensioning guidelines and capacities for tank design

	No. of cylinders			4	5	6	7	8
Ⓑ	h	Recommended total tank height	(mm)	according to installation requirements				
		Recommended total tank volume: 105% *4)	(m3)	10	12	13	15	17
Ⓑ	h1	Recommended filling level	(mm)	according to installation requirements				
		Recommended volume: 100% *4)	(m3)	9	11	13	14	16
	h2	Low-level alarm	(mm)	*2)				
		Volume	(m3)					
Ⓑ	Vr	Min. retention volume *5)	(m3)	6	7	8	9	10
	d	Distance between suction pipe and bottom of tank	(mm)	*3)				
	As	Suction area		min. 1.5 x suction pipe area (DN)				

REMARKS:

*1) Level after filling of external system. Volume and level in the LO drain tank depend on capacity of pipes, coolers, filters, etc. The oil volume in tank contains a part of the oil quantity, which drains back when the pumps are stopped.

*2) The low-level alarm (h2) has to be positioned in such a way that a proper pump suction is ensured under the conditions defined by the classification societies.

Minimum inclination angles comply with the rules of classification societies:

Heel to each side	15°
Rolling to each side	±22.5
Trim	500/L, max. 5° L: ship length in meter Example L = 250 m Trim = 500/250 = 2°
Pitching	± 7.5°

Additionally this level has to be above or equal to the minimum retention volume (Vr) for M/E operation.

*3) Distance (d) between suction pipe inlet of main LO pumps and LO drain tank bottom has to be in accordance with the requirements of the pump manufacturer. As guideline the following formula can be applied: d = DN/4 + 40, d = min. 80 mm.

Ⓑ *4) The stated tank volume represent the min. requirement. Final tank dimensions have to be aligned in regard to dimensional restricions by ship and engine structure and the pump suction requirement.

Ⓑ *5) To be maintained during engine operation (LO pump suction without LO drain back-flow (emergency case) is ensured for at least 3 minutes).

LO DRAIN TANK - FILLING PROCESS

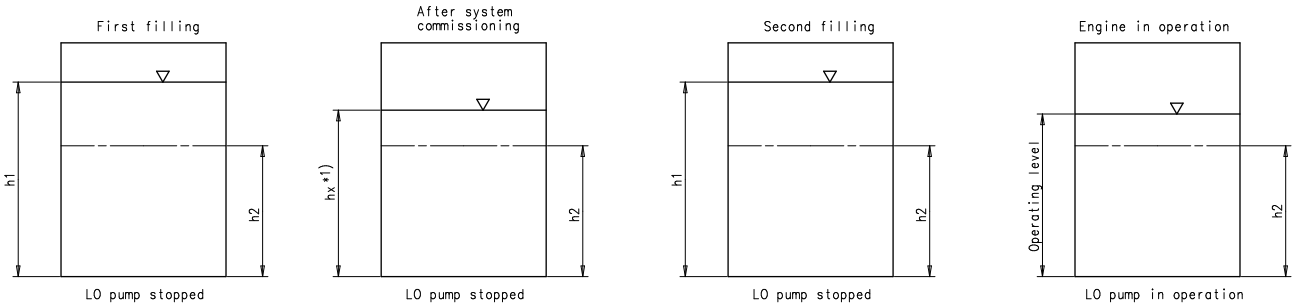

Free space for i.c.										Q-Code XXXXX	Main Dra.
										Standard ISO JIS	
Modif.	A	EAAD086282	16.11.2015	B	EAAD086531	31.03.2016					
	Number	Drawn date	Number	Drawn date	Number	Drawn date	Number	Drawn date			

WIN GD Winterthur Gas & Diesel

Product W-52

LUBRICATING OIL DRAIN TANK
FILLING GUIDELINE

Units mm kg | IDE | Basic Material | Net Weight 0.001

SURFACE PROTECTION SEE GROUP 0344	Mode	10.12.2014 wwa008 W.WANG	Scale 1:25	Size A1	Page 1/1	Material ID PAAD178480	
TOLERANCING PRINCIPLE ISO8015	Chkd	16.01.2015 mhu019 Hug	Design Group 9722	Drawing ID DAAD061878		Rev. B	
GENERAL TOLERANCES ACCORDING TO ISO2768-mK	Appd	16.01.2015 bha009 Haag					

DTD - DIMENSIONAL DRAWING - Confidential

Approved

Copyright Winterthur Gas & Diesel Ltd. All rights reserved. By taking possession of the drawing the recipient recognizes and honours these rights. Neither the whole nor any part of this drawing may be used in any way for construction, fabrication, marketing or any other purpose nor copied in any way nor made accessible to third parties without the previous written consent of Winterthur Gas & Diesel Ltd.

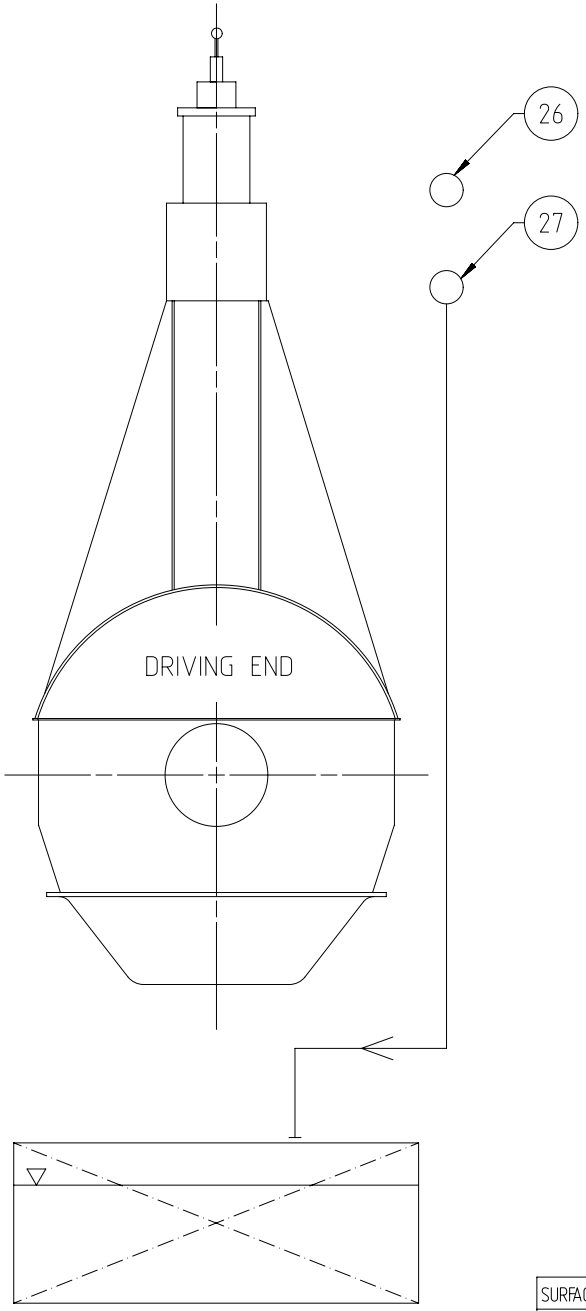

SPECIFICATION which must be met

26 / C

INLET - Turbocharger lubricating oil

- Lubricating oil temperature:
  - ABB: 30 ~ 85 °C
  - MHI: 35 ~ 50 °C
- Lubricating oil pressure
  - ABB: 0.8 ~ 2.5 bar
  - MHI: 0.6 ~ 1.5 bar
- Lubricating oil volume flow: according to the turbocharger maker's recommendation
- Lubricating oil cleanliness:
  - Full flow filtered by a 50 micron (absolute sphere passing mesh) automatic self-cleaning filter

27

OUTLET - Turbocharger lubricating oil

- Oil return to lubricating oil drain tank
- Oil return pipe must not be connected to other drain pipes.
- Oil outlet must be above the max. oil level in the tank or as an alternative a drain pipe with venting holes above the max. oil level needs to be installed.

Prod.

Change History

Rev.	Creator	Approver	Approval Date	Change ID	Change Synopsis	Approved	Activity Code	E	C
C	dki021	mhu019	02.05.2024	CNAA005688	Drawing updated.			4	3
B	dki021	mhu019	21.01.2022	CNAA001108	see ChangeNotice			4	3
A	dki021	mhu019	08.09.2020	EAAD091530	Legacy information. See corresponding ChangeNotice			4	-
-	dki021	bha009	16.12.2016	EAAD781009	-			-	-

WIN GD
Winterthur Gas & Diesel

LUBRICATING OIL SYSTEM
FOR SEPARATED TC LUBRICATING

Dimension

Scale –	NX	Units [mm] [kg]	Basic Material		Net Weight 0.001
		Main Design	Design Group 9722	Q-Code X X M	Standard WDS
		Qty per	A3	Item ID PAAD245338	Drawing Page/s 1/5

SURFACE PROTECTION SEE GROUP 0344
TOLERANCING PRINCIPLE ISO8015
GENERAL TOLERANCES ACCORDING TO ISO2768-mK

Copyright Winterthur Gas & Diesel Ltd. All rights reserved. By taking possession of the drawing the recipient recognizes and honours these rights. Neither the whole nor any part of this drawing may be used in any way for construction, fabrication, marketing or any other purpose nor copied in any way nor made accessible to third parties without the previous written consent of Winterthur Gas & Diesel Ltd.

Pos.	Description
001	ABB-Turbocharger
002	Lubricating oil drain tank
003	Heating coil
004	Suction filter
005	Lubricating oil pump
006	Lubricating oil cooler
007	Automatic temperature control valve
008	Lubricating oil filter *6)
009	Pressure regulating valve
26	INLET - Turbocharger lubricating oil *5)
27	OUTLET - Turbocharger lubricating oil *5) *7)

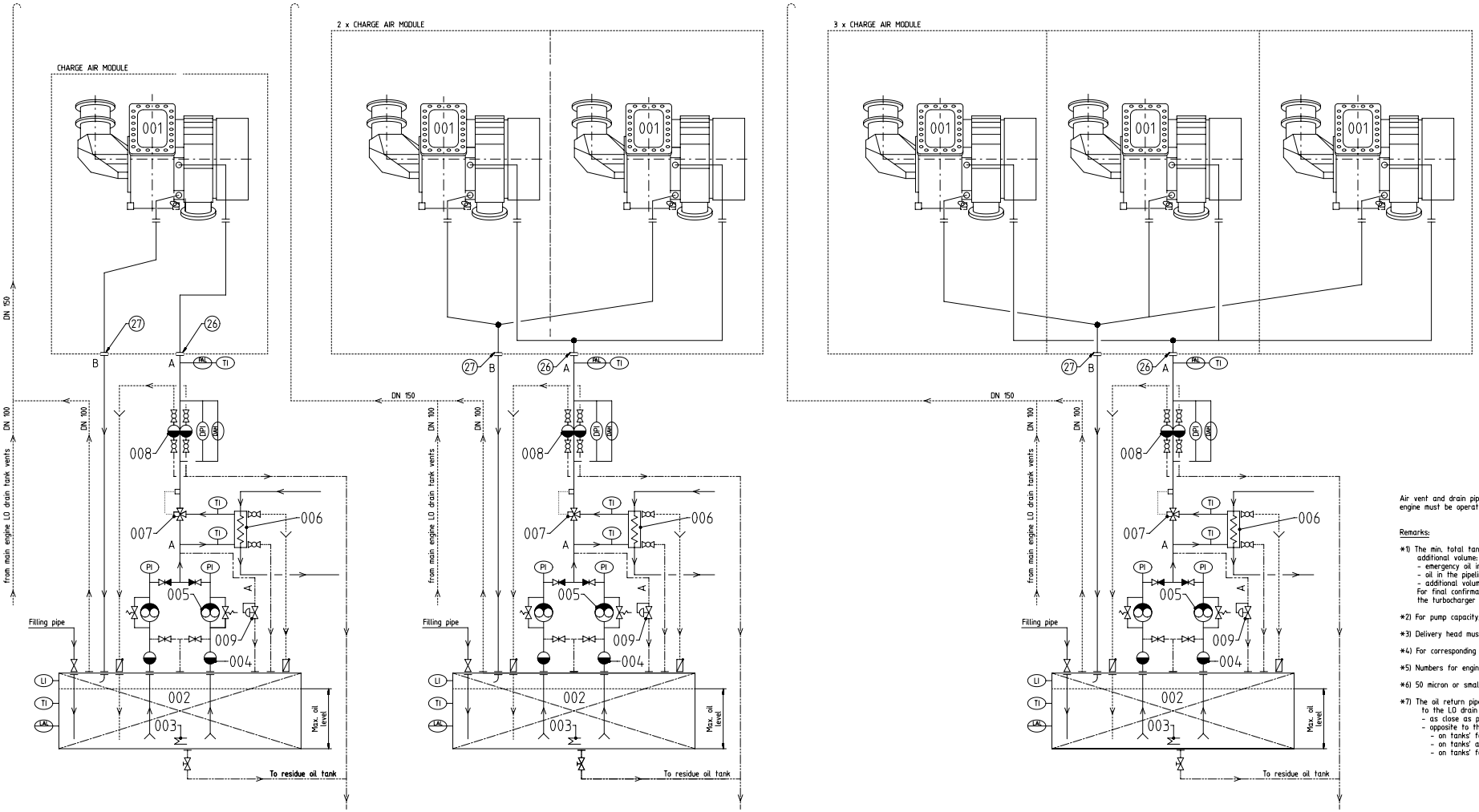

Air vent and drain pipes must be fully functional at all inclination angles of the ship at which the engine must be operational.

Remarks:

*1) The min. total tank capacity must consider the min. retention volume, plus the following additional volume:
- emergency oil in the integrated head tank
- oil in the pipeline which drains back, when pump is stopped
- additional volume for air

For final confirmation of the min. total tank capacity, please contact the turbocharger manufacturer.

*2) For pump capacity, temperature and oil viscosity, please refer to the GTD program.

*3) Delivery head must be according to the actual piping layout.

*4) For corresponding data, please refer to manufacturer of turbocharger.

*5) Numbers for engine pipe connections, please refer to the pipe connection plan for specific engine.

*6) 50 micron or smaller (absolute, sphere passing mesh).

*7) The oil return pipe must not be connected to other drain pipes. If the oil is returned to the LO drain tank it is recommended to connect the oil outlet
- as close as possible to the separator suction pipe
- opposite to the main LO pump, i.e.
  - on tanks' forward end if the main LO pump is on tanks' aft end
  - on tanks' aft end if the main LO pump is on tanks' forward end
  - on tanks' forward or aft end if the main LO pump is in the middle of the tank.

1 SET OF TURBOCHARGER			A165-L / A265-L	A170-L / A270-L	A175-L / A275-L	A180-L / A280-L	A185-L / A285-L	A190-L
LO tank	min. retention volume	m³	*4)					
	min. total tank capacity	m³	*1)					
LO pump *2)	capacity	m³	Refer to GTD					
	capacity	l/min						
	delivery *3)	bar	4.0					
Nominal pipe diameter	A	DN	32	32	32	40	40	40
	B	DN	65	65	65	80	80	80
	C	DN	65	65	65	80	80	80

2 SETS OF TURBOCHARGERS			A165-L / A265-L	A170-L / A270-L	A175-L / A275-L	A180-L / A280-L	A185-L / A285-L	A190-L
LO tank	min. retention volume	m³	*4)					
	min. total tank capacity	m³	*1)					
LO pump *2)	capacity	m³	Refer to GTD					
	capacity	l/min						
	delivery *3)	bar	4.0					
Nominal pipe diameter	A	DN	40	50	50	50	65	65
	B	DN	80	100	100	100	125	125
	C	DN	80	100	100	100	125	125

3 SETS OF TURBOCHARGERS			A175-L / A275-L	A180-L / A280-L	A185-L / A285-L	A190-L
LO tank	min. retention volume	m³	*4)			
	min. total tank capacity	m³	*1)			
LO pump *2)	capacity	m³	Refer to GTD			
	capacity	l/min				
	delivery *3)	bar	4.0			
Nominal pipe diameter	A	DN	65	65	65	80
	B	DN	125	125	150	150
	C	DN	125	125	150	150

Bearing LO pipes
Transfer/dirty LO pipes
Overflow/drain pipes
Air vent pipes
Pipe connections
Pipes on engine

C	dk4021	FRALCD	DCDCZCDA	CHAMZDEEB	Drawing updated.
Rev.	Creator	Approver	Approval Date	Change Kl.	

SURFACE PROTECTION SEE GROUP 6944
TOLERANCING PRINCIPLE ISO8015
GENERAL TOLERANCES ACCORDING TO ISO2768-mK

Project | Activity Code | Drawing Symbol | Sheet | Sheets
4 | 3

Drawing Pages: 2/5

Item ID: PAAD245338

A0 | NX | [mm] | [kg]

Pos.	Description
001	MHI-Turbocharger (MET-MA)
002	Lubricating oil drain tank
003	Heating coil
004	Suction filter
005	Lubricating oil pump
006	Lubricating oil cooler
007	Automatic temperature control valve
008	Lubricating oil filter *6)
009	Pressure regulating valve
26	INLET - Turbocharger lubricating oil *5)
27	OUTLET - Turbocharger lubricating oil *5) *7)

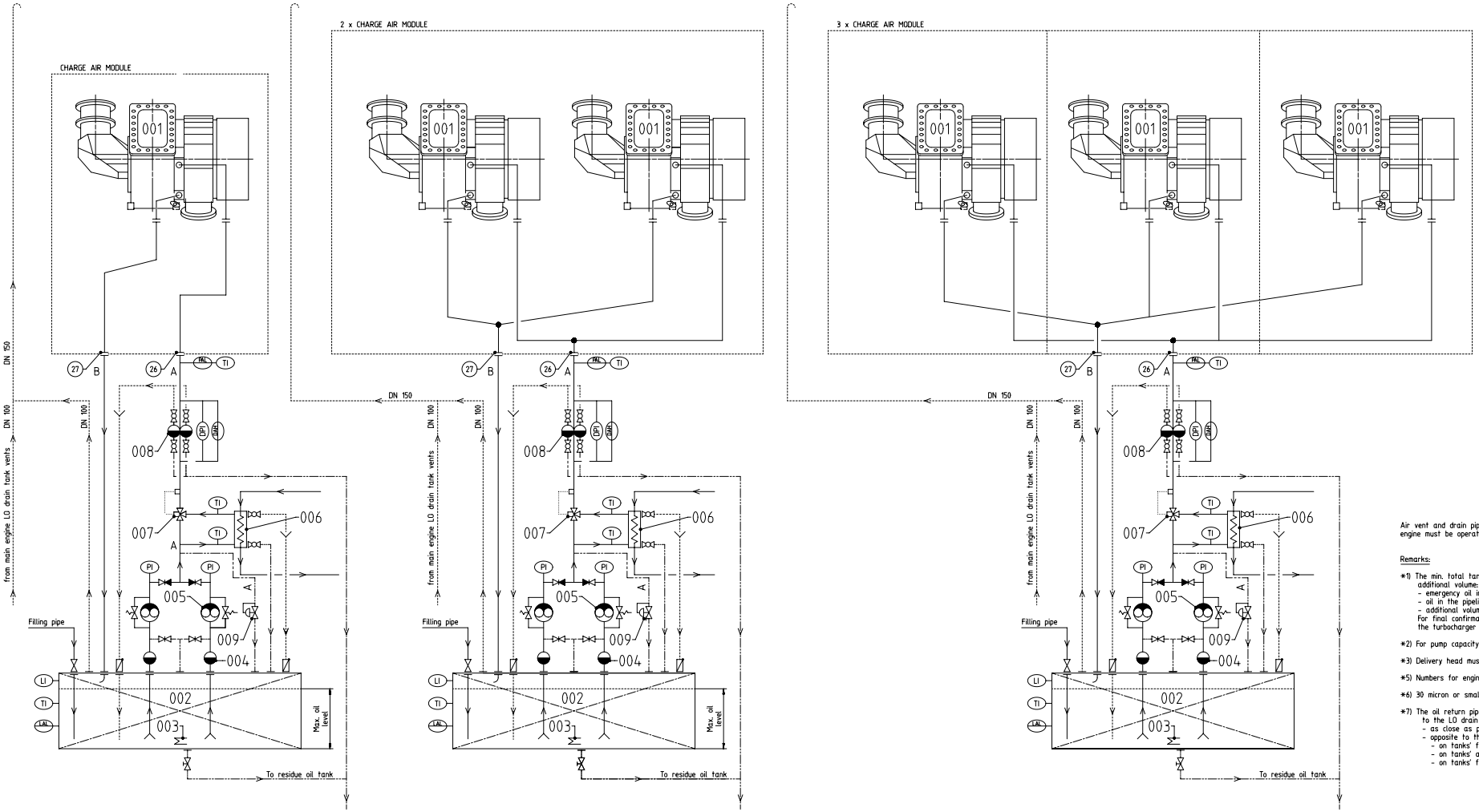

Air vent and drain pipes must be fully functional at all inclination angles of the ship at which the engine must be operational.

Remarks:

*1) The min. total tank capacity must consider the min. retention volume, plus the following additional volume:
- emergency oil in the integrated head tank
- oil in the pipeline which drains back, when pump is stopped
- additional volume for air
For final confirmation of the min. total tank capacity, please contact the turbocharger manufacturer.

*2) For pump capacity, temperature and oil viscosity, please refer to the GTD program.

*3) Delivery head must be according to the actual piping layout.

*5) Numbers for engine pipe connections, please refer to the pipe connection plan for specific engine.

*6) 30 micron or smaller (absolute, sphere passing mesh).

*7) The oil return pipe must not be connected to other drain pipes. If the oil is returned to the LO drain tank it is recommended to connect the oil outlet
- as close as possible to the separator suction pipe
- opposite to the main LO pump, i.e.
  - on tanks' forward end if the main LO pump is on tanks' aft end
  - on tanks' aft end if the main LO pump is on tanks' forward end
  - on tanks' forward or aft end if the main LO pump is in the middle of the tank.

1 SET OF TURBOCHARGER			MET33MA	MET42MA	MET53MA	MET60MA	MET66MA	MET71MA	MET83MA	MET90MA
LO tank	min. retention volume	m³	0.18	0.27	0.43	0.53	0.67	0.88	1.07	1.30
	min. total tank capacity	m³	*1)							
LO pump *2)	capacity	m³	Refer to GTD							
	capacity	l/min								
	delivery *3)	bar	4.0							
Nominal pipe diameter	A	DN	25	32	40	50	50	50	50	65
	B	DN	40	50	65	80	80	100	100	125
	C	DN	40	50	65	80	80	80	100	100

2 SETS OF TURBOCHARGERS			MET33MA	MET42MA	MET53MA	MET60MA	MET66MA	MET71MA	MET83MA	MET90MA
LO tank	min. retention volume	m³	0.36	0.54	0.86	1.06	1.33	1.76	2.14	2.60
	min. total tank capacity	m³	*1)							
LO pump *2)	capacity	m³	Refer to GTD							
	capacity	l/min								
	delivery *3)	bar	4.0							
Nominal pipe diameter	A	DN	32	40	50	65	65	65	80	100
	B	DN	100	125	125	150	150	200	200	200
	C	DN	50	65	80	100	100	100	125	125

3 SETS OF TURBOCHARGERS			MET53MA	MET60MA	MET66MA	MET71MA	MET83MA	MET90MA
LO tank	min. retention volume	m³	1.29	1.59	2.00	2.64	3.21	3.90
	min. total tank capacity	m³	*1)					
LO pump *2)	capacity	m³	Refer to GTD					
	capacity	l/min						
	delivery *3)	bar	4.0					
Nominal pipe diameter	A	DN	65	80	80	80	100	100
	B	DN	150	200	200	250	250	250
	C	DN	100	125	125	125	150	150

Bearing LO pipes
Transfer/dirty LO pipes
Overflow/drain pipes
Air vent pipes
Pipe connections
Pipes on engine

SURFACE PROTECTION SEE GROUP 8344
TOLERANCING PRINCIPLE ISO8015
GENERAL TOLERANCES ACCORDING TO ISO2768-mK

Rev.	Date	Drawn	Approved	Approved Date	Change Nr.	Changed Item	Description
C	dk4021	nlb.CD	2021.12.14	CHANGEREB			Drawing updated.

Energy Systems — Aftertreatment — Activity Code: X, C

Copyright by this document and all rights reserved. No copy, distribution, publication or other use of this document or its contents without written consent of Mitsui Engineering & Shipbuilding Co., Ltd. is prohibited. Violating of this clause entitles the owner to claim for damages.

Item ID: NX | A0 | PAAD245338 | Drawing Page: 3/5

Pos.	Description
001	MHI-Turbocharger (MET-MB)
002	Lubricating oil drain tank
003	Heating coil
004	Suction filter
005	Lubricating oil pump
006	Lubricating oil cooler
007	Automatic temperature control valve
008	Lubricating oil filter *6)
009	Pressure regulating valve
26	INLET - Turbocharger lubricating oil *5)
27	OUTLET - Turbocharger lubricating oil *5) *7)

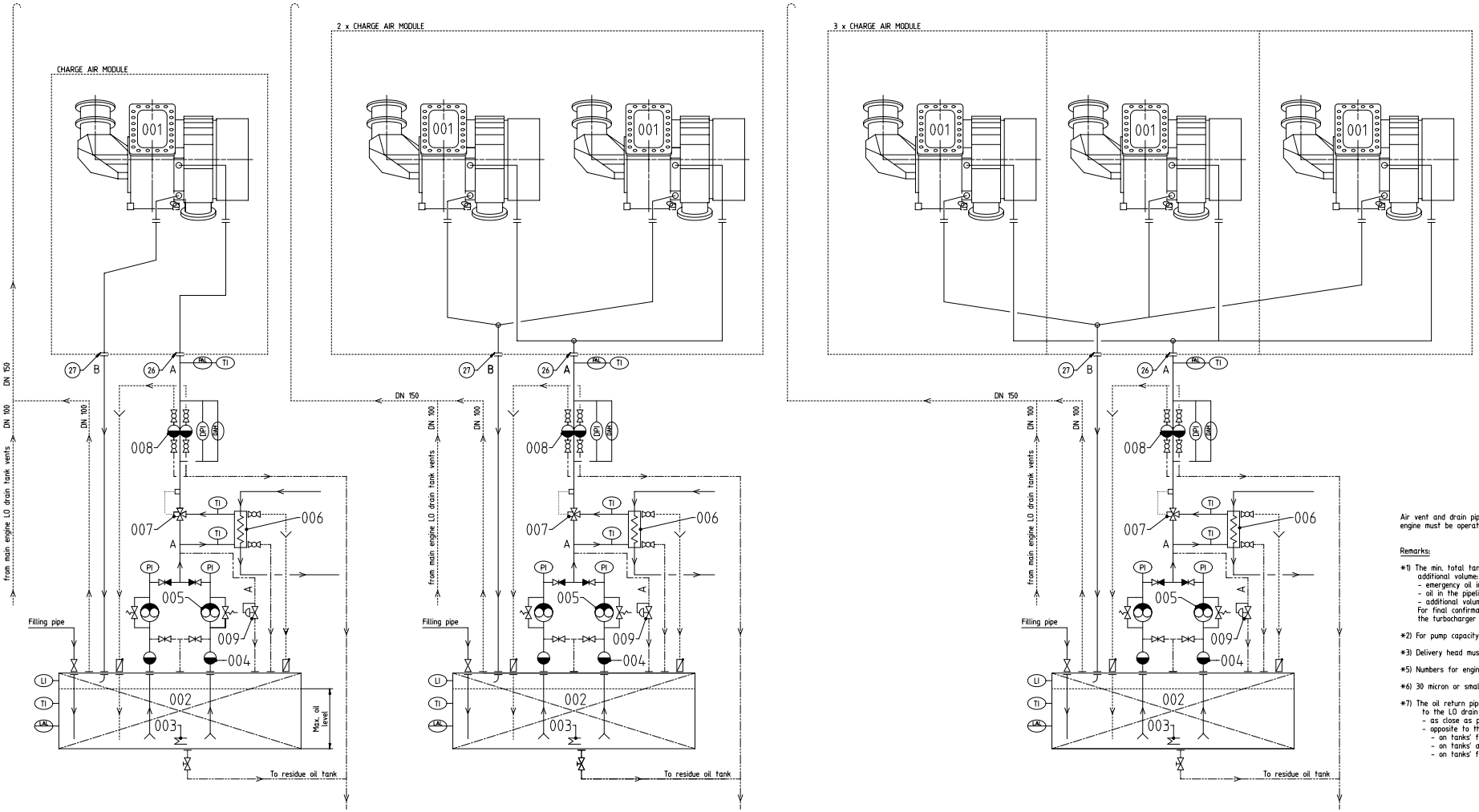

Air vent and drain pipes must be fully functional at all inclination angles of the ship at which the engine must be operational.

Remarks:

*1) The min. total tank capacity must consider the min. retention volume, plus the following additional volume:
- emergency oil in the integrated head tank
- oil in the pipeline which drains back, when pump is stopped
- additional volume for air

For final confirmation of the min. total tank capacity, please contact the turbocharger manufacturer.

*2) For pump capacity, temperature and oil viscosity, please refer to the GTD program.

*3) Delivery head must be according to the actual piping layout.

*5) Numbers for engine pipe connections, please refer to the pipe connection plan for specific engine.

*6) 30 micron or smaller (absolute, sphere passing mesh).

*7) The oil return pipe must not be connected to other drain pipes. If the oil is returned to the LO drain tank it is recommended to connect the oil outlet
- as close as possible to the separator suction pipe
- opposite to the main LO pump, i.e.
  - on tanks' forward end if the main LO pump is on tanks' aft end
  - on tanks' aft end if the main LO pump is on tanks' forward end
  - on tanks' forward or aft end if the main LO pump is in the middle of the tank.

1 SET OF TURBOCHARGER			MET33MB	MET37MB	MET42MB	MET48MB	MET53MB	MET60MB	MET66MB	MET71MB	MET83MB	MET90MB
LO tank	min. retention volume	m³	0.21	0.26	0.31	0.41	0.49	0.61	0.77	1.01	1.23	1.50
	min. total tank capacity	m³	*1)									
LO pump *2)	capacity	m³	Refer to GTD									
	capacity	l/min										
	delivery *3)	bar	4.0									
Nominal pipe diameter	A	DN	20	25	25	32	32	32	32	32	40	50
	B	DN	40	50	50	65	65	80	80	100	100	125
	C	DN	40	50	50	65	65	80	80	80	100	100

2 SETS OF TURBOCHARGERS			MET33MB	MET37MB	MET42MB	MET48MB	MET53MB	MET60MB	MET66MB	MET71MB	MET83MB	MET90MB
LO tank	min. retention volume	m³	0.41	0.52	0.62	0.82	0.99	1.22	1.53	2.02	2.46	2.99
	min. total tank capacity	m³	*1)									
LO pump *2)	capacity	m³	Refer to GTD									
	capacity	l/min										
	delivery *3)	bar	4.0									
Nominal pipe diameter	A	DN	32	40	40	40	50	50	50	50	65	80
	B	DN	80	100	100	125	125	125	150	200	200	200
	C	DN	50	65	65	80	80	100	100	100	125	125

3 SETS OF TURBOCHARGERS			MET53MB	MET60MB	MET66MB	MET71MB	MET83MB	MET90MB
LO tank	min. retention volume	m³	0.41	0.52	0.62	0.82	0.99	1.22
	min. total tank capacity	m³	*1)					
LO pump *2)	capacity	m³	Refer to GTD					
	capacity	l/min						
	delivery *3)	bar	4.0					
Nominal pipe diameter	A	DN	65	65	65	65	80	100
	B	DN	150	150	200	200	250	250
	C	DN	100	125	125	125	150	150

- Bearing LO pipes
- Transfer/dirty LO pipes
- Overflow/drain pipes
- Air vent pipes
- Pipe connections
- Pipes on engine

1	C	dk4021	nlk130	20.05.2014	CHANGEREQ	Drawing updated.	4 3
Rev.	Creator	Approver	Approval Date	Change Kl.		Energy Systems	PAARTAKEN Activity Code X X

SURFACE PROTECTION SEE GROUP 6944
TOLERANCING PRINCIPLE ISO8015
GENERAL TOLERANCES ACCORDING TO ISO2768-mK

Copyright by this document and all rights reserved. No copying, distribution, publishing or other use of this document or its contents is allowed without our express permission. Violators will be liable for damages. All rights reserved in the event of the grant of a patent, utility model or design.

[mm] [kg] | NX | A0 | Item ID | PAAD245338 | Drawing Page/s 4/5

Pos.	Description
001	MHI-Turbocharger (MET-MBII)
002	Lubricating oil drain tank
003	Heating coil
004	Suction filter
005	Lubricating oil pump
006	Lubricating oil cooler
007	Automatic temperature control valve
008	Lubricating oil filter *6)
009	Pressure regulating valve
26	INLET - Turbocharger lubricating oil *5)
27	OUTLET - Turbocharger lubricating oil *5) *7)

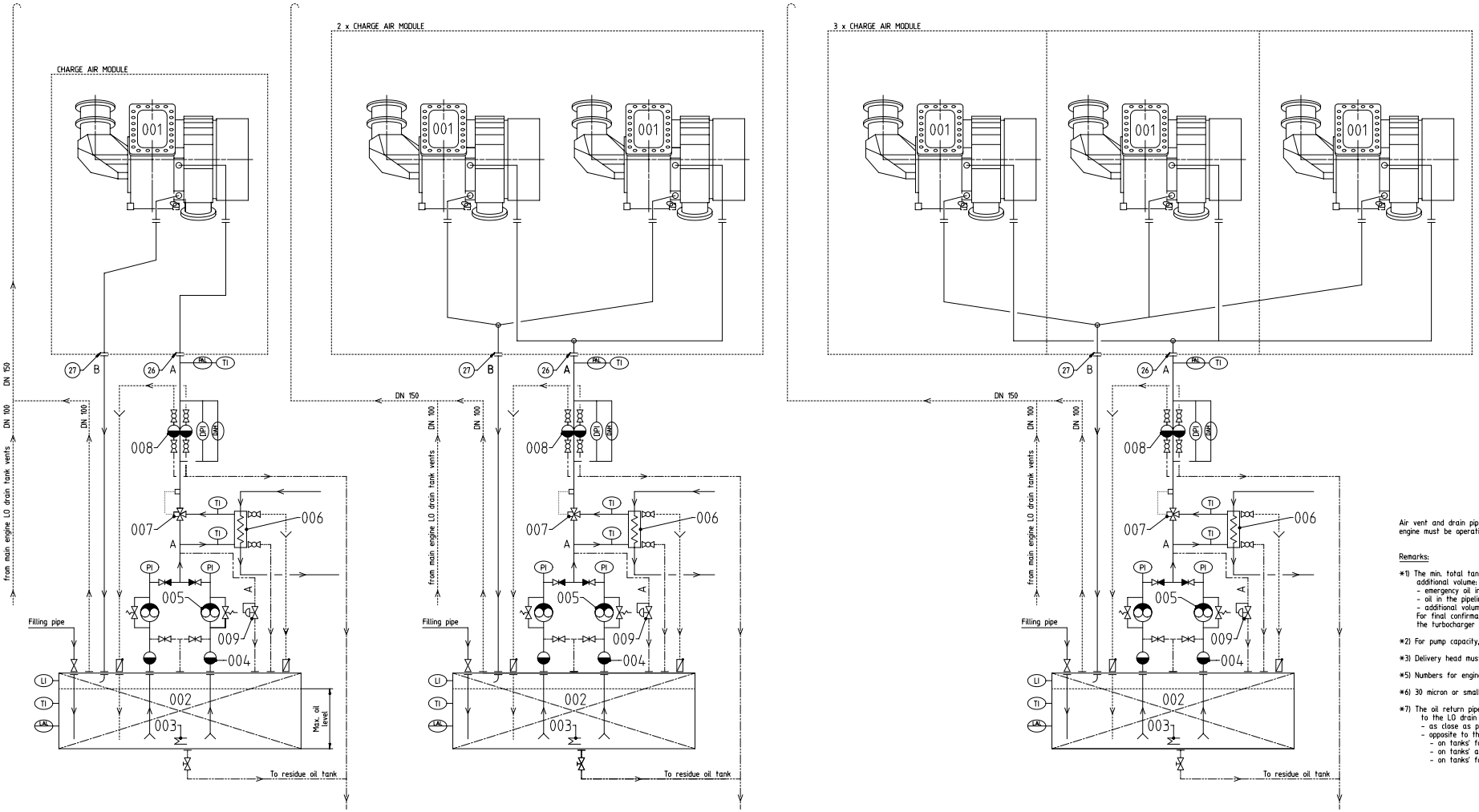

Air vent and drain pipes must be fully functional at all inclination angles of the ship at which the engine must be operational.

Remarks:

*1) The min. total tank capacity must consider the min. retention volume, plus the following additional volume:
- emergency oil in the integrated head tank
- oil in the pipeline which drains back, when pump is stopped
- additional volume for air

For final confirmation of the min. total tank capacity, please contact the turbocharger manufacturer.

*2) For pump capacity, temperature and oil viscosity, please refer to the GTD program.

*3) Delivery head must be according to the actual piping layout.

*5) Numbers for engine pipe connections, please refer to the pipe connection plan for specific engine.

*6) 30 micron or smaller (absolute, sphere passing mesh).

*7) The oil return pipe must not be connected to other drain pipes. If the oil is returned to the LO drain tank it is recommended to connect the oil outlet
- as close as possible to the separator suction pipe
- opposite to the main LO pump, i.e.
  - on tanks' forward end if the main LO pump is on tanks' aft end
  - on tanks' aft end if the main LO pump is on tanks' forward end
  - on tanks' forward or aft end if the main LO pump is in the middle of the tank.

1 SET OF TURBOCHARGER			MET33MBII	MET37MBII	MET42MBII	MET48MBII	MET53MBII	MET60MBII	MET66MBII	MET71MBII	MET83MBII	MET90MBII
LO tank	min. retention volume	m³	0.27	0.34	0.42	0.53	0.67	0.82	1.04	1.22	1.67	2.02
	min. total tank capacity	m³	*1)									
LO pump *2)	capacity	m³	Refer to GTD									
	capacity	l/min										
	delivery *3)	bar	4.0									
Nominal pipe diameter	A	DN	20	25	25	32	32	32	32	32	40	50
	B	DN	40	50	50	65	65	80	80	100	100	125
	C	DN	40	50	50	65	65	80	80	80	100	100

2 SETS OF TURBOCHARGERS			MET33MBII	MET37MBII	MET42MBII	MET48MBII	MET53MBII	MET60MBII	MET66MBII	MET71MBII	MET83MBII	MET90MBII
LO tank	min. retention volume	m³	0.54	0.69	0.83	1.06	1.33	1.65	2.08	2.44	3.33	4.04
	min. total tank capacity	m³	*1)									
LO pump *2)	capacity	m³	Refer to GTD									
	capacity	l/min										
	delivery *3)	bar	4.0									
Nominal pipe diameter	A	DN	32	40	40	40	50	50	50	50	65	80
	B	DN	80	100	100	125	125	125	150	200	200	200
	C	DN	50	65	65	80	80	100	100	100	125	125

2 SETS OF TURBOCHARGERS			MET53MBII	MET60MBII	MET66MBII	MET71MBII	MET83MBII	MET90MBII
LO tank	min. retention volume	m³	2.00	2.47	3.13	3.66	5.00	6.06
	min. total tank capacity	m³	*1)					
LO pump *2)	capacity	m³	Refer to GTD					
	capacity	l/min						
	delivery *3)	bar	4.0					
Nominal pipe diameter	A	DN	65	65	65	65	80	100
	B	DN	150	150	200	200	250	250
	C	DN	100	125	125	125	150	150

- Bearing LO pipes
- Transfer/dirty LO pipes
- Overflow/drain pipes
- Air vent pipes
- Pipe connections
- Pipes on engine

1	C	dk4021	nhLCD	20.05.2014	CHAUDEREB	Drawing updated.	4 3
Rev.	Creation	Approver	Approval	Date	Change K.		

SURFACE PROTECTION SEE GROUP 6944
TOLERANCING PRINCIPLE ISO8015
GENERAL TOLERANCES ACCORDING TO ISO2768-mK

Energy Systems
Activity Code
Drawing Page/s 5/5
Item ID PAAD245338
A0

Self-Regulating Heating Cable 10QTVR2-CT

Order drawing

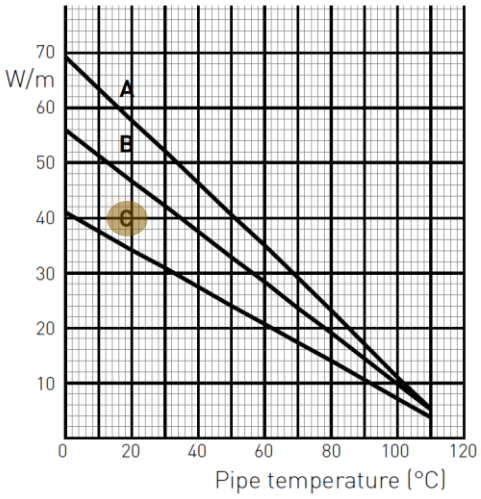

C 10QTVR2-CT

Heating cable construction

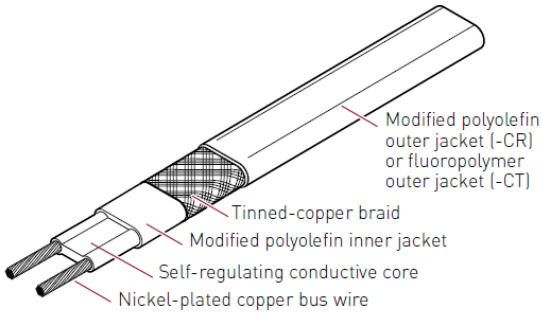

Specification:

Description:	10QTVR2-CT
Order No.:	391991-000
Area Classification:	Non-hazardous and hazardous locations
Traced surface type:	Metal and plastic
Chemical Resistance:	Exposure to aqueous inorganic chemicals: Use -CR (modified polyolefin outer jacket) Exposure to organic chemicals or corrosives: Use -CT (fluoropolymer outer jacket)
Supply Voltage:	200-277 VAC
Temperature Rating:	Maximum maintain or continuous exposure temperature (power on) 225°F (110°C) Maximum intermittent exposure temperature, 1000 hours (power on) 225°F (110°C) Minimum installation temperature –76°F (–60°C)
Minimum Bending Radius:	13 mm at 20°C 35 mm at -60°C
Height:	4.5 mm
Width:	11.8 mm
Weight:	0.126 kg/m

Supplier: PENTAIR
www.pentairthermal.com

MAXIMUM CIRCUIT LENGHT BASED ON TYPE 'C' CIRCUIT BREAKERS ACCORDING TO EN60898
SUPPLY VOLTAGE 230 VAC

Electrical protection sizing	Start-up temperature	Maximum heating cable length per circuit [m]
16A	-20°C	65
	+10°C	80
25A	-20°C	95
	+10°C	115
32A	-20°C	115
	+10°C	115
40A	-20°C	115
	+10°C	115

Substitute for:																		
													PC	Q-Code	X	S	X	X	X
Modif	A	EAAD090454	05.03.2019															
		Number	Drawn Date		Number	Drawn Date		Number	Drawn Date		Number	Drawn Date						

WIN GD
Winterthur Gas & Diesel

Product
W-2S

Heating Element
Order Drawing

Made	24.10.2018	P. Kowalski	Main Drw.	Page 1 / 1	Material ID	**PAAD308926**
Chkd	24.10.2018	R. Leutwyler	Design Group			
Appd	24.10.2018	W. Östreicher	**0009**	Drawing ID	**DAAD106761**	Rev **A**

Copyright WinGD. All rights reserved. By taking possession of the drawing, the recipient recognizes and honors these rights. Neither the whole nor any part of this drawing may be used in any way for construction, fabrication, marketing or any other purpose nor copied in any way nor made accessible to third parties without the previous written consent of WinGD.

MIDS - Lubricating Oil System (DG9722)

WinGD X52DF-S1.0/-S2.0

TRACK CHANGES

DATE	SUBJECT	DESCRIPTION
2021-05-10	DRAWING SET	First web upload
2023-07-13	PAAD381283A	New revision
2023-11-15	PAAD381279B PTAA058055A	New execution
2024-01-11	PTAA073716-- PTAA073719--	New execution
2024-05-07	PTAA245339C PTAA092228- PTAA092190- PTAA092191-	New execution for 7 cyl.

DISCLAIMER

© Copyright by Winterthur Gas & Diesel Ltd.
All rights reserved. No part of this document may be reproduced or copied in any form or by any means (electronic, mechanical, graphic, photocopying, recording, taping or other information retrieval systems) without the prior written permission of the copyright owner.

THIS PUBLICATION IS DESIGNED TO PROVIDE AN ACCURATE AND AUTHORITATIVE INFORMATION WITH REGARD TO THE SUBJECT-MATTER COVERED AS WAS AVAILABLE AT THE TIME OF PRINTING. HOWEVER, THE PUBLICATION DEALS WITH COMPLICATED TECHNICAL MATTERS SUITED ONLY FOR SPECIALISTS IN THE AREA, AND THE DESIGN OF THE SUBJECT-PRODUCTS IS SUBJECT TO REGULAR IMPROVEMENTS, MODIFICATIONS AND CHANGES. CONSEQUENTLY, THE PUBLISHER AND COPYRIGHT OWNER OF THIS PUBLICATION CAN NOT ACCEPT ANY RESPONSIBILITY OR LIABILITY FOR ANY EVENTUAL ERRORS OR OMISSIONS IN THIS BOOKLET OR FOR DISCREPANCIES ARISING FROM THE FEATURES OF ANY ACTUAL ITEM IN THE RESPECTIVE PRODUCT BEING DIFFERENT FROM THOSE SHOWN IN THIS PUBLICATION. THE PUBLISHER AND COPYRIGHT OWNER SHALL UNDER NO CIRCUMSTANCES BE HELD LIABLE FOR ANY FINANCIAL CONSEQUENTIAL DAMAGES OR OTHER LOSS, OR ANY OTHER DAMAGE OR INJURY, SUFFERED BY ANY PARTY MAKING USE OF THIS PUBLICATION OR THE INFORMATION CONTAINED HEREIN.

Winterthur Gas & Diesel Ltd.
Winterthur Gas & Diesel AG.
Winterthur Gas & Diesel S.A.

Schützenstrasse 3
PO Box 414, CH-8401
Winterthur, Switzerland

Tel. +41 (0)52 264 8844
Fax +41 (0)52 264 8866

www.wingd.com